Extending Application of Simple for Dead and Continuous for Live Load Steel Bridge System to ABC Applications in Seismic Regions- Phase II- Experimental

PROGRESS REPORT
Period ending March 31, 2016

Submitted by
Amir Sadeghnejad

Department of Civil and Environmental Engineering
Florida International University
Miami, Florida

Submitted to
Atorod Azizinamini
Director, ABC-UTC
May 2017
ABC-UTC

Contents

1. Introduction

The steel bridge system referred to as Simple for Dead load and Continuous for Live load (SDCL) has gained popularity in non-seismic areas of the country. Accordingly, it results in many advantages including enhanced service life and lower inspection and maintenance costs as compared to conventional steel systems. The main objective of this research was to extend the application of SDCL to seismic areas. The concept of the SDCL system was developed at the University of Nebraska-Lincoln and a complete summary of the research is provided in five AISC Engineering Journal papers. The SDCL system is providing steel bridges with new horizons and opportunities for developing economical bridge systems, especially in cases for which accelerating the construction process is a priority. The SDCL steel bridge system also provides an attractive alternative for use in seismic areas.

The SDCL concept for seismic areas needed a suitable connection between the girder and pier. In this research, an integral SDCL bridge system was considered for further investigation. The structural behavior and force resistance mechanism of the proposed seismic detail considered through analytical study in Phase I of this research. The followings are some of the finding of this phase (numerical and analytical study) that proposed a detail for SDCL for seismic zones.

The proposed connection (Figure 1) evaluated under push-up, push-down, inverse and axial loading to find the sequence of failure modes. The global and local behavior of the system under push-down forces was mainly similar to non-seismic detail. The nonlinear time history analysis indicated that there is a high probability that bottom flange sustains tension forces under seismic events. The finite element model subjected to push-up forces to simulate the response of the system under the vertical component of seismic loads. However, the demand-capacity ratio was low for vertical excitation of seismic loads. Besides finite element results showed that continuity of bottom flange increased ductility and capacity of the system. While the bottom flange was not continuous, tie bars helped the system to increase the ultimate moment capacity. To model the longitudinal effect of earthquake loads, the model subjected under inverse forces as well as axial forces at one end. In this case, dowel bars were most critical elements of the system. Finite element analyses performed to investigate the role of each component of preliminary and revised detail. All the results demonstrated that continuity of the bottom flange, bolts area (in the preliminary detail), tie bars over the bottom flange (in the revised detail) were not able to provide more moment capacity for the system. The only component increased the moment capacity was dowel bars. In fact, increasing the volume ratio of dowel bars could be able to increase the moment capacity and prevent premature failure of the system.

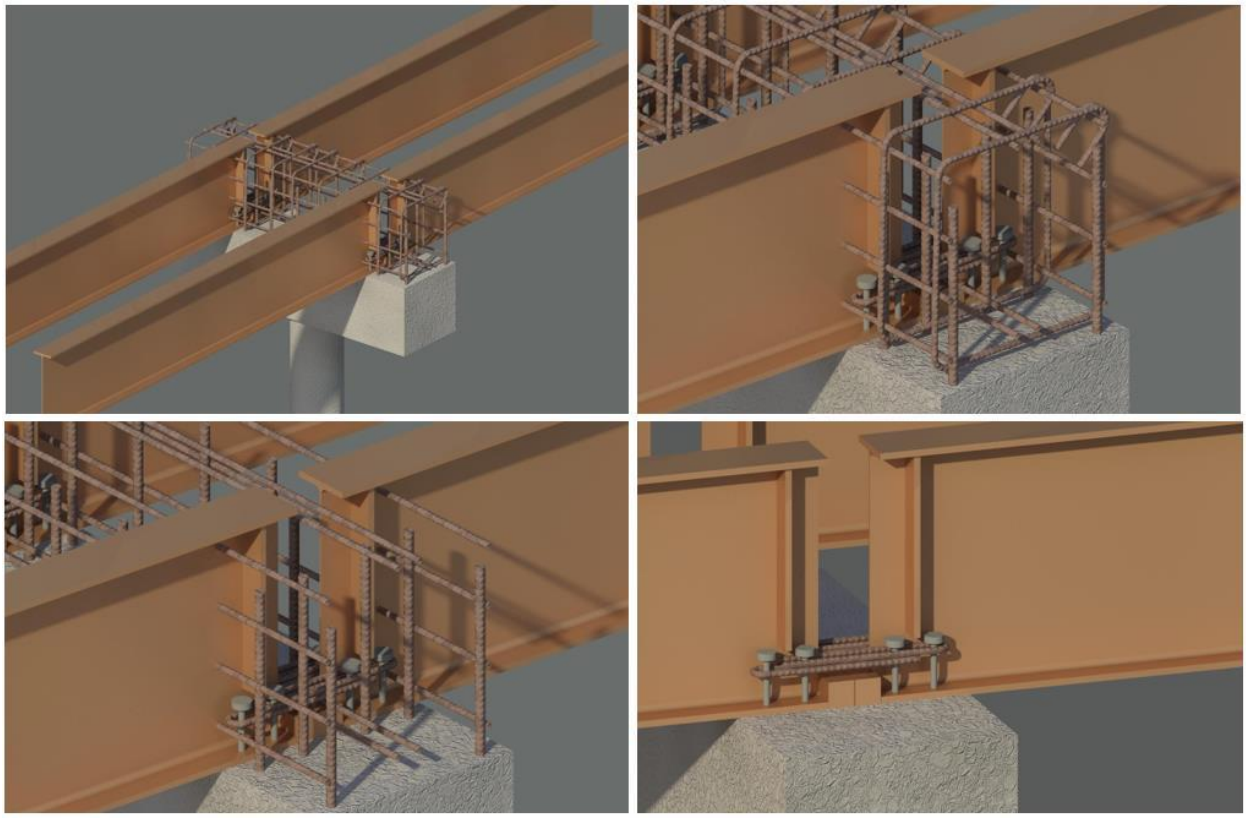

Figure 1 Proposed connection by the Phase I of this research.

Phase I of this research concentrated on developing suitable details mainly through numerical analysis and provided a comprehensive numerical study for the design of SDCL detail in steel bridges. In Phase II (current phase) of this research project, an experimental test will be conducted as a proof of concept test and evaluate the validity of the design recommendations. In the phase III of this project, a scale model bridge containing the SDCL detail will be subjected to a shake table test at the University of Nevada-Reno.

The following section describes the component test details of the one-third scale specimen and test setup used for evaluating the behavior of the proposed system under cyclic lateral loading to simulate the longitudinal component of the seismic loads.

2. Component Test Setup

After investigating different test set ups for the component test, it was decided to construct a test set up similar to experimental testing conducted at the University of California - San Diego (Jill Patty, 2001). The main goal of this test is checking the detail which connects steel girders to each other inside the concrete diaphragm. When an integral bridge is subjected to longitudinal direction of earthquake loads, the deformation of column is double curvature with inflection point at the middle of column length. The deflection and moment distribution along the girder and column is similar to Figure 2. The amount of moment at mid high of column and dead load inflection point

is equal to 0.0 and 0.3M respectively as illustrated in Figure 3. Therefore, specimen is going to be constructed in an inverted orientation. The length of girders is equal to distance from column to deal load inflection point. The support at two ends of girders were constructed as roller (Figure 4)

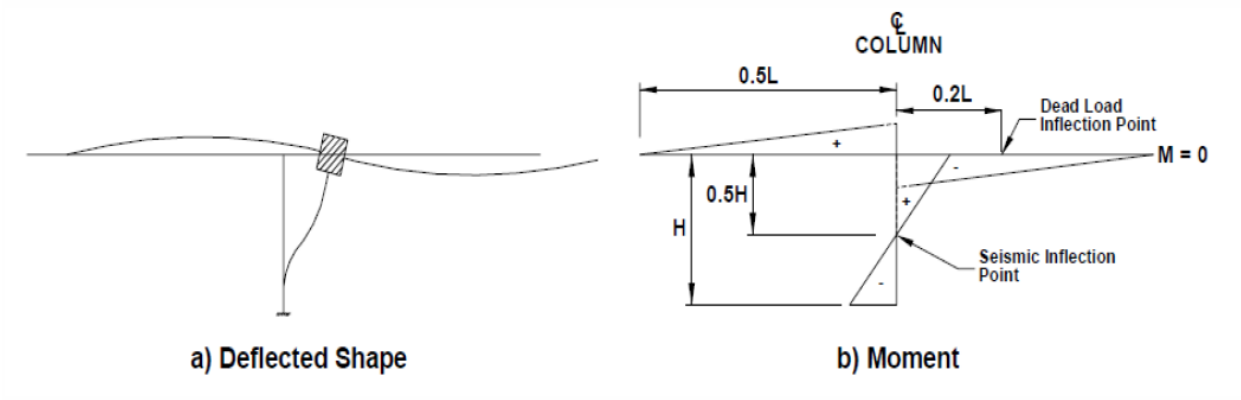

Figure 2 Deflected shape and column moment diagram under longitudinal component of earthquake (Patty, 2001).

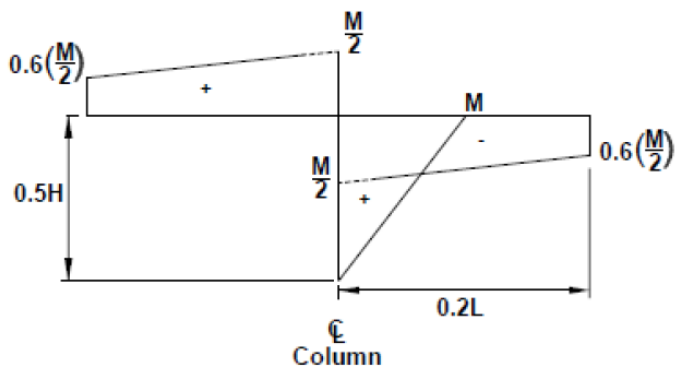

Figure 3 Amount of moment at boundary condition of specimen (Patty,2001)

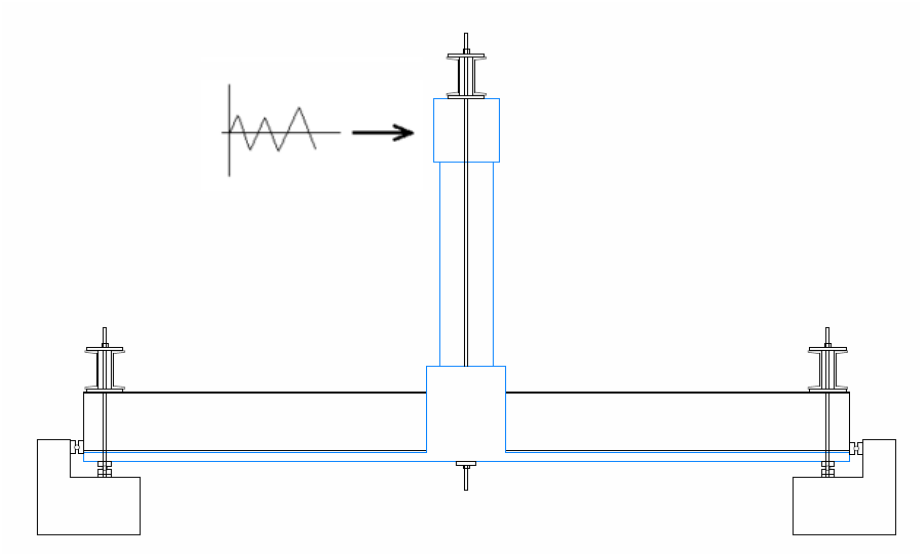

Figure 4 Schematic view of test set up.

Based on the provided document by University of Nevada – Reno, a bridge with two span, each span equal to 100 feet was considered for the experimental test. The substructure of this bridge comprise two columns with four steel girders inside of the deck. The columns are connected monolithically to the bent cap. The design strategy for the component test is similar to a bridge with ductile substructure and an essentially elastic superstructure. Accordingly, the plastic hinges should form at end of the columns. Due to the symmetry behavior of the bridge, it was decided one column with two girders to be constructed in the structures lab. A schematic view of the component test shown in Figure 5.

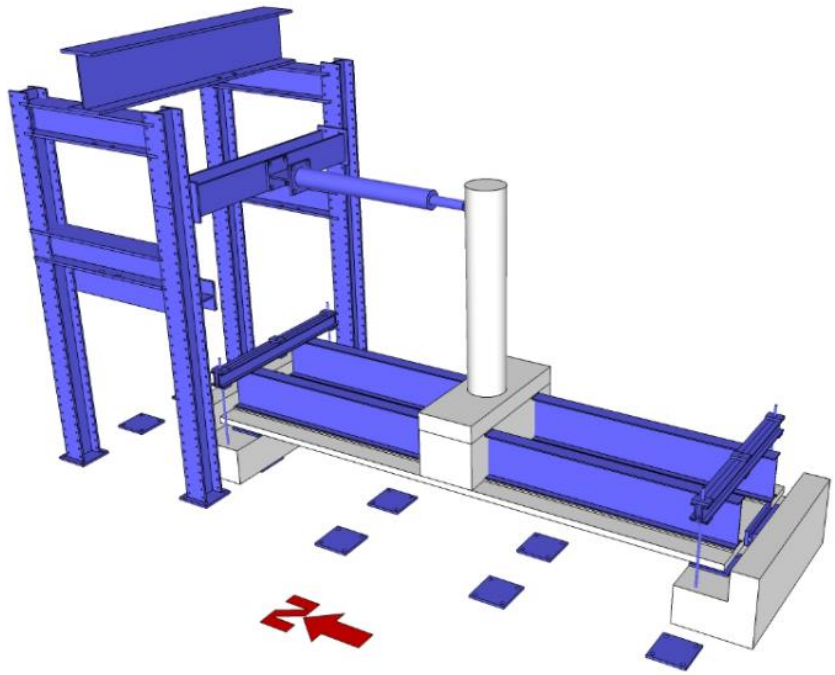

Figure 5 Schematic view of the component test.

3. Component Test Details

An experimental testing program, capable of verifying the project recommendation in Phase II of the study was developed. A prototype two-span steel I-girder bridge was selected for finding the demand side of the detail over the pier under seismic loads. The prototype bridge was designed and scaled down to 1/3 for the purpose of Phase II and III of this research. The scaled down bridge was designed to undergo the same stresses as the prototype bridge. For the component testing, a column with two girders at two side considered to be constructed in the structure lab of FIU (Figure 6).

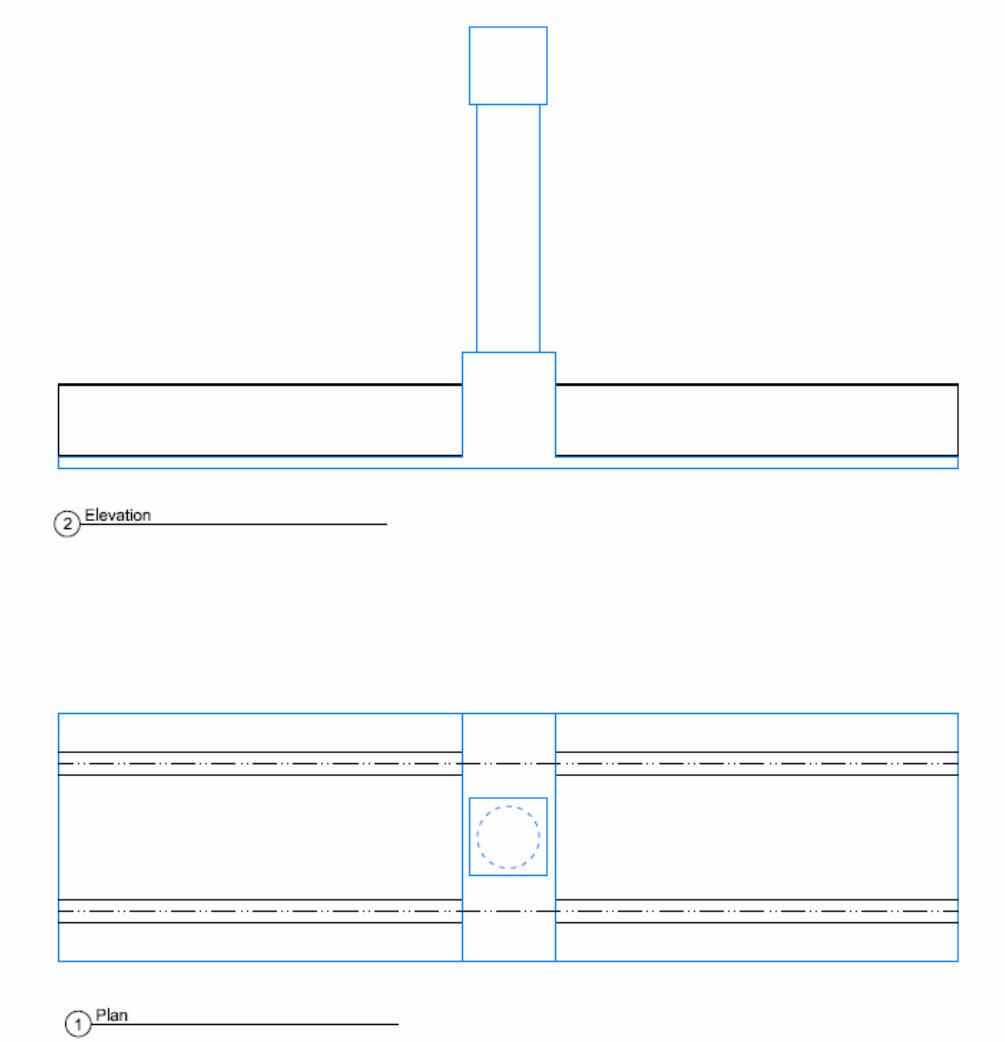

Figure 6 Schematic view of the test specimen at FIU.

3.1. Column

The column of the prototype bridge was designed by UNR research team. Based on the provided information, the diameter of the concrete column is 48 in. which is reinforced with 32#11 vertical bars and #7 hoop every 4 in. The compressive strength of concrete assumed to be 5000 ksi and the yield strength of reinforcement bars is equal to 60 ksi. The column was scaled down to 1/3 and redesigned for the component test. The diameter of the column is 16 in. which is reinforced with 12 #5 longitudinal bars and #3 spiral with 2.5 in. distance between hoops (Figure 7).

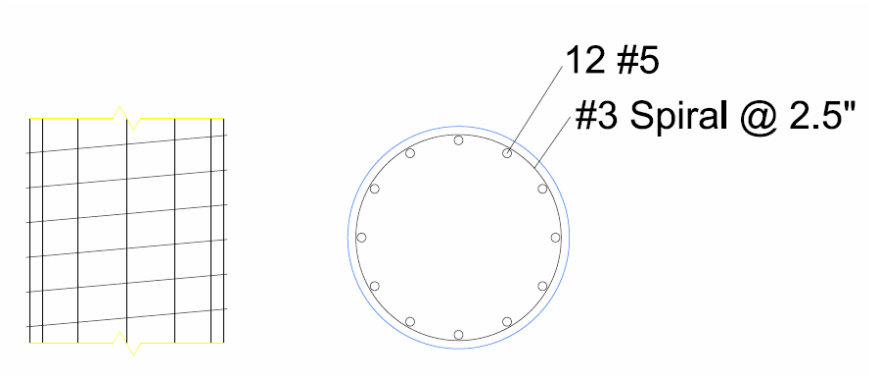

Figure 7 Column section.

The Section Designer program was used to observe the moment-curvature and calculating the column section properties. In the moment curvature plot, AASHTO/CALTRANS idealized bilinear curve represented by a dashed red line (Figure 8). The dotted green line represents over strength moment factor based on CALTRANS specification.

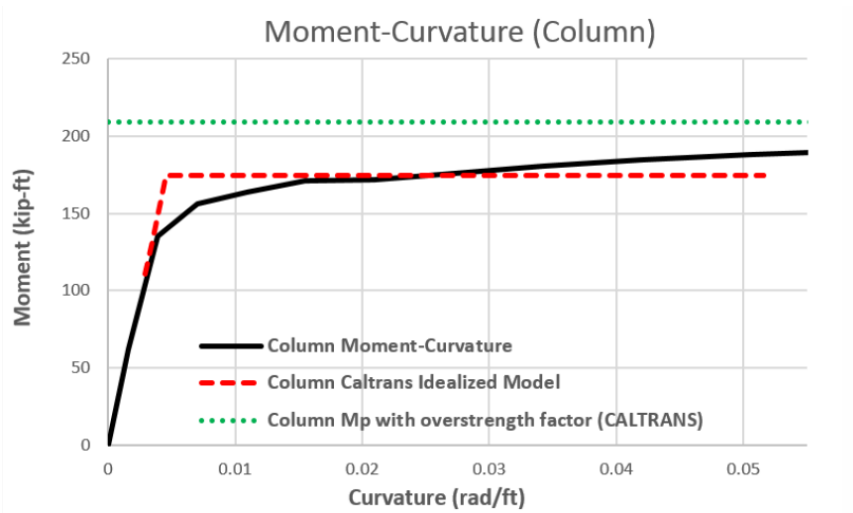

Figure 8 Column moment-curvature for the one third scale

3.2. Cap-beam and Diaphragm

Moment capacity of the column and cap beam in transverse direction (here cap beam refers to the concrete beam which comprises bent cap and concrete diaphragm) calculated by a Moment-Curvature analysis. The finite element software ANSYS used to compute the moment capacity of the system in longitudinal direction (traffic direction). Notice for the moment curvature analysis in the transverse direction, the section is not symmetric, therefore analysis conducted for both negative and positive moments and the minimum considered for comparison with the column capacity.

According to CALTRANS, bent cap shall be designed as a capacity protected member and remained essentially elastic for flexural forces once the column reaches its over-strength moment capacity. The capacity design approach guarantee the super structure and bent cap have enough demand strength to carry transferred forces from the column at the ultimate load level. The expected nominal moment capacity Mne of the capacity protected members might be computed using M-ϕ analysis. The expected nominal moment capacity shall be based on expected material property when concrete strain reaches 0.003 or the steel strain reaches ε^{R}_{su}. Reduced ultimate tensile strain (ε^{R}_{su}) is equal to 0.09 for #10 bars and smaller, and is equal to 0.06 for #11 and larger. Following Figures show the moment capacity of the column and bent cap (longitudinal, Figure 9, and transverse direction, Figure 10) for the full scale and one third scale model. For the bent cap in longitudinal direction, the moment capacity of one girder calculated based on finite element model and two times of this capacity compared with moment capacity of the column.

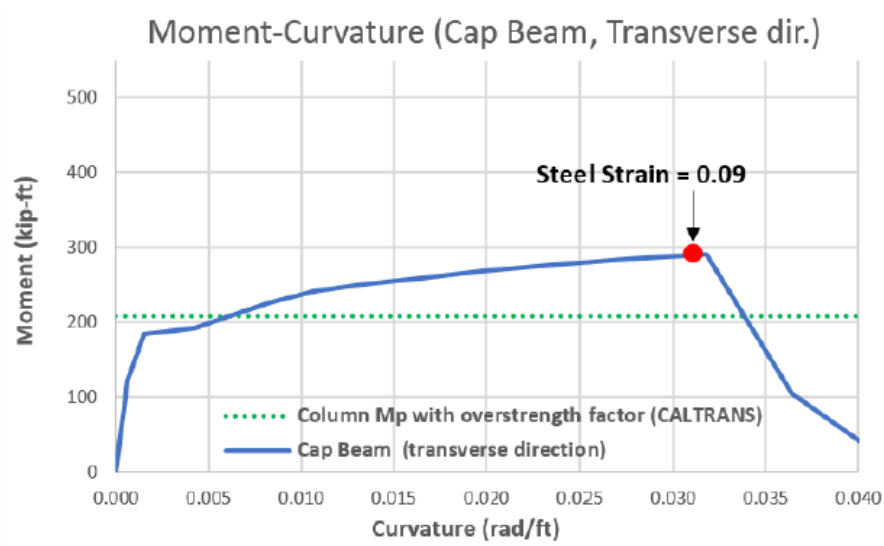

Figure 9 Cap-beam moment-curvature in transverse direction.

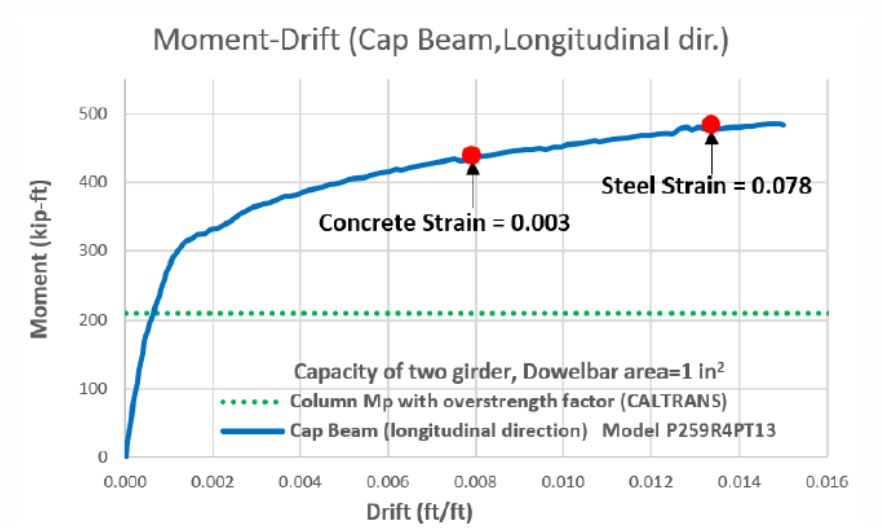

Figure 10 Cap-beam moment-curvature in longitudinal direction.

3.3. Girders and Deck

The prototype bridges consists of four W40x215 steel I-girders that support a 7 ½ in. deck. The deck is scaled down to 3 in and deck reinforcement was a mesh of #4 at 6 in. and the girders were scaled down to have the same stresses under scaled down demand forces (Figure 11 and Figure 12).

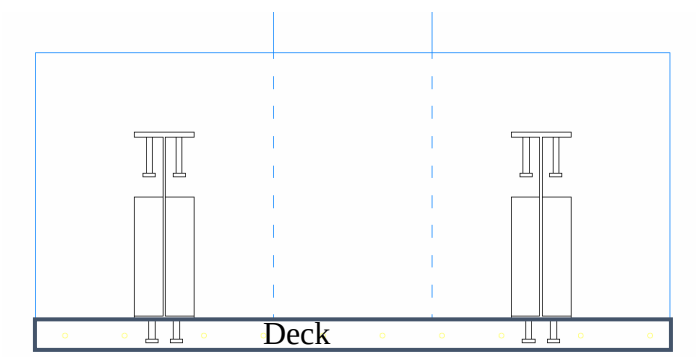

Figure 11 Girders and deck view.

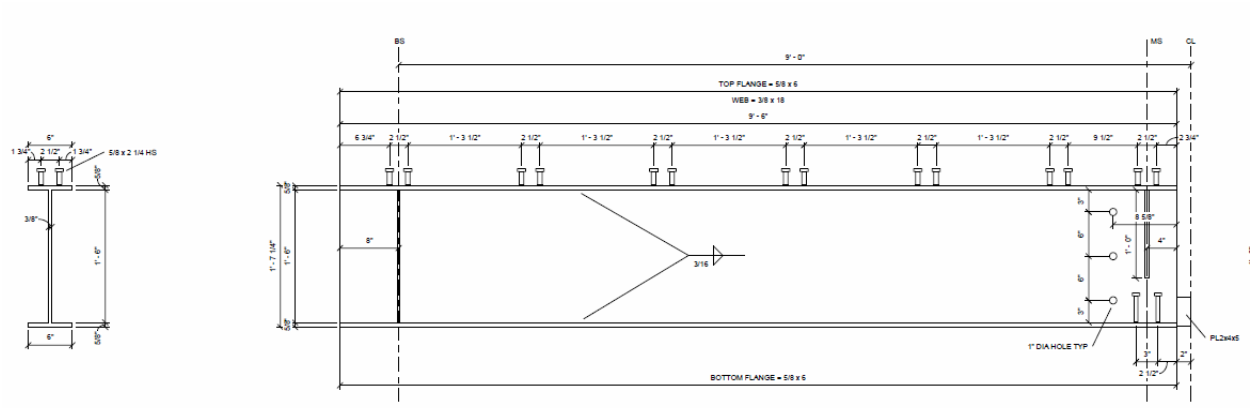

Figure 12 Girder section and details.

3.4. Connection Details

The SDCL connection detail suggested by the Phase I, numerical study, includes the following parts.

1. Steel blocks at the end of the compression flanges. These blocks are to pass the compression forces between the girders. The size of the steel blocks is 2”x2”x6” based on the size of the girders. The width of the block is equal to the width of the girder’s flange and the height of it is suggested by the non-seismic design provisions of SDCL to be about 1/6 of the height of the girder. The blocks are welded to the end of the compression flanges.
2. Tie bars between the shear studs on the compression flange. These ties are to pass the maximum demand tension forces between girders.
3. End stiffeners. The stiffeners from the non-seismic version of the SDCL connection had to be modified to have space for passing the tie bars between the compression flanges. These stiffeners are to pass the compression from the top flange to the concrete and also grabbing the concrete under tension forces in the girder.
4. Additional deck reinforcement in the connection area. These reinforcement are to pass the tension forces between the top flanges of the girders. These additional deck reinforcement is incorporated in the deck design.

These details are to be capacity protected and remain essentially elastic during the force transfer. A schematic view of these details and the connection is shown in Figure 13. The constructed detail of the specimen in this area is shown in Figure 14

3

1

2

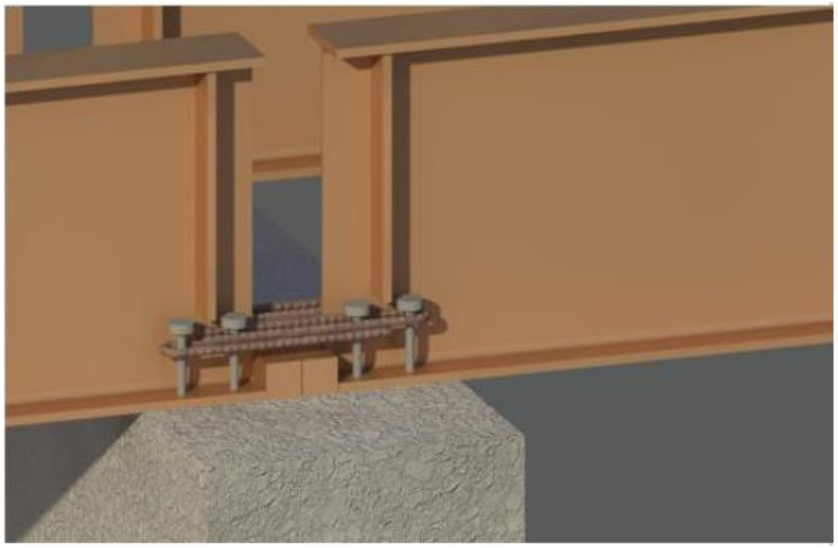

Figure 13 Schematic view of connection details.

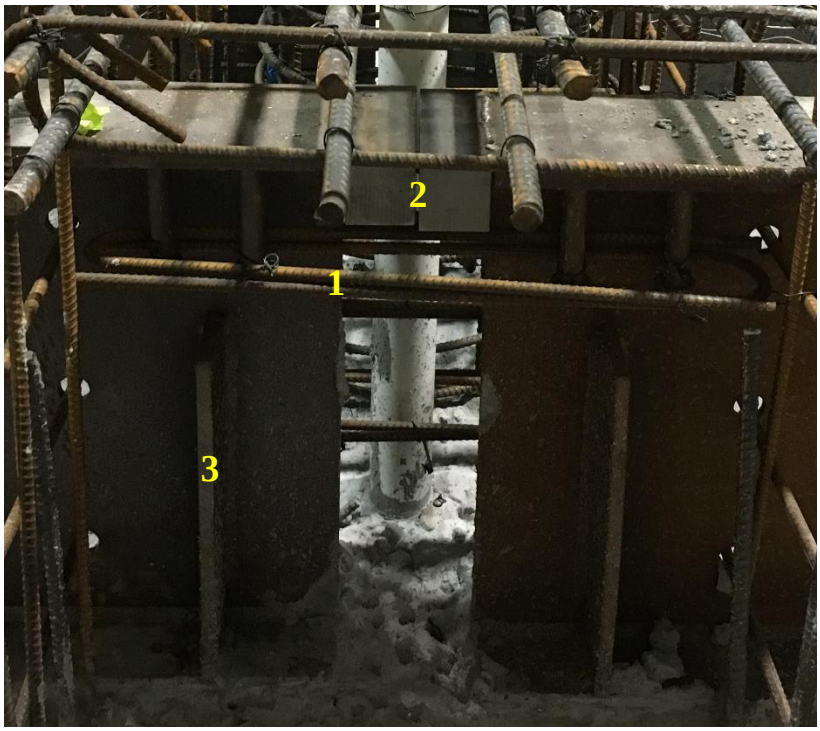

Figure 14 View of the connection detail as built.

4. Construction of the test specimen

Following the proposed inverted test setup, the construction of the specimen was a challenging task. I was decided to cast the specimen in three different steps.

1- Casting deck up to the girders (3 in.)

2- Casting cap-beam and diaphragm up to the column (+27 in.)
3- Casting the column and loading cap at the top (+74 in.)

These steps are shown in the Figure 15. The construction is currently in preparing the formworks for step 3. Figure 16 to Figure 19 show the sequence of construction at different steps.

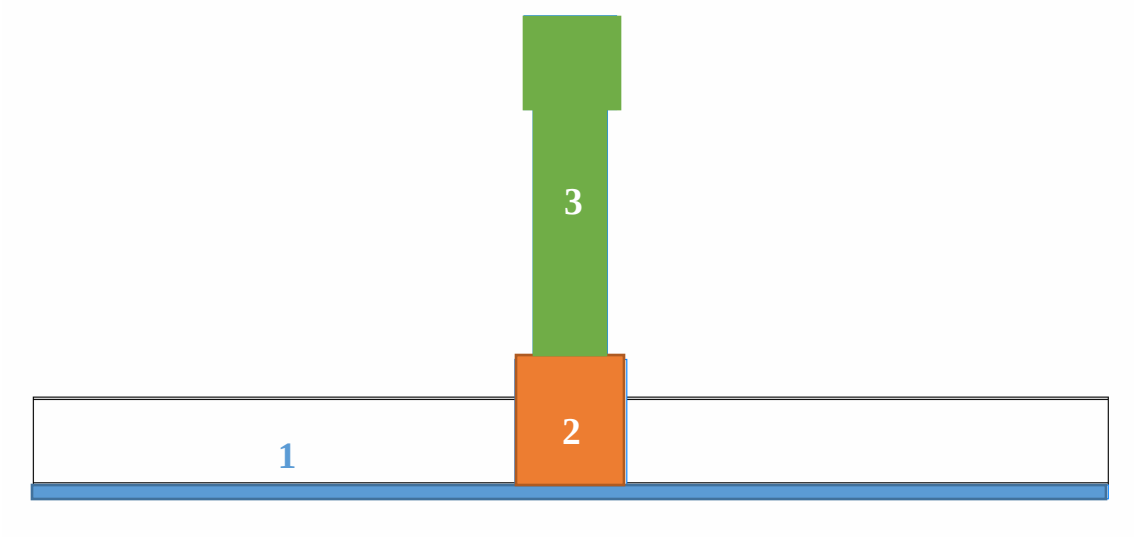

Figure 15 Construction sequence for the test specimen.

Figure 16 The connection before casting step 1.

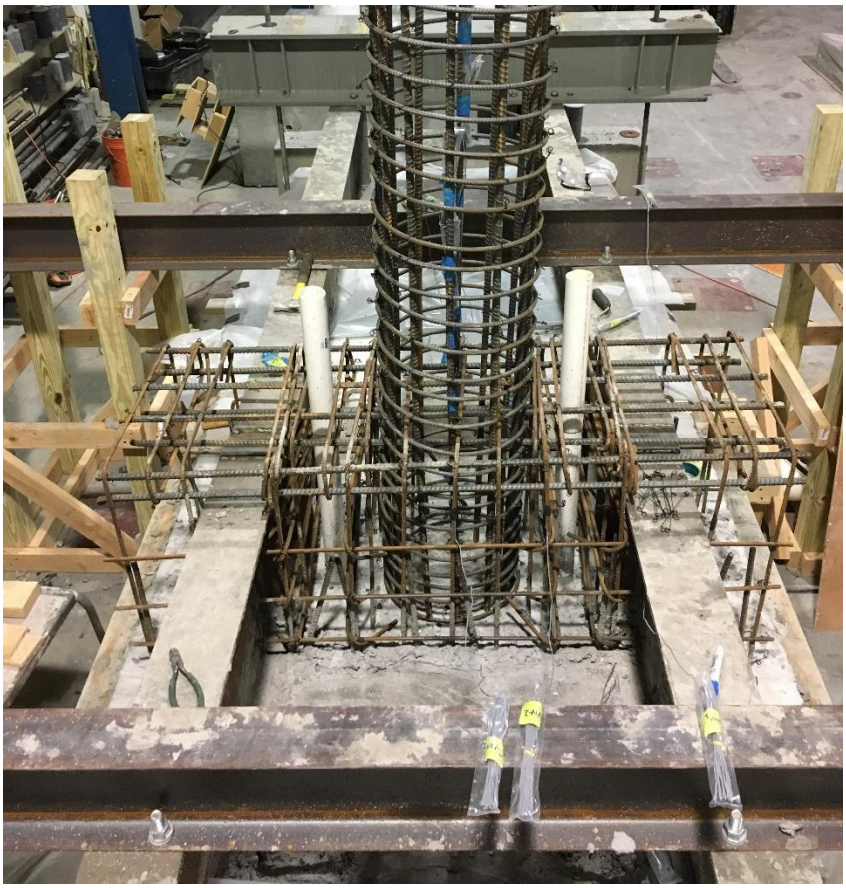

Figure 17 Specimen after casting step 1.

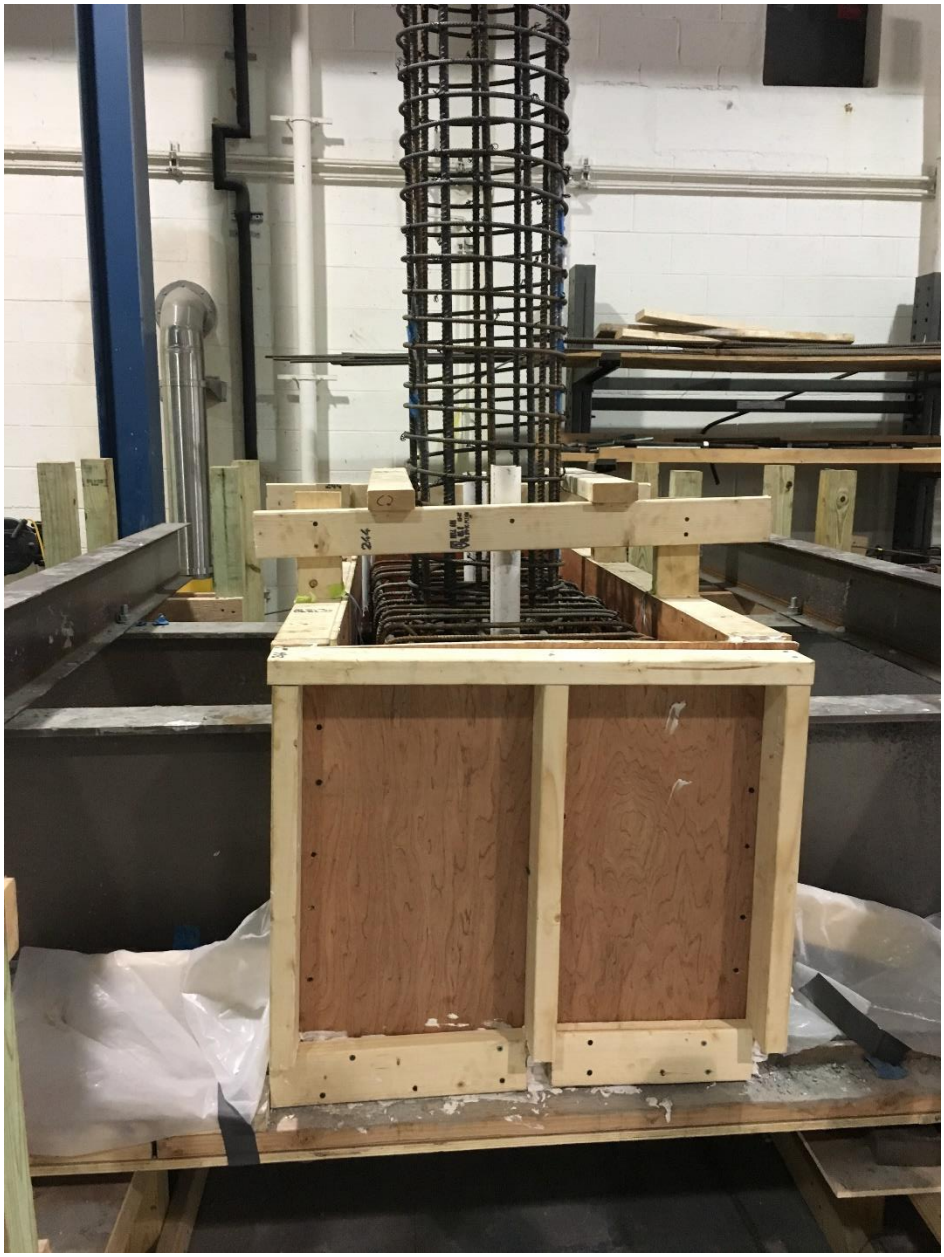

Figure 18 Before casting step 2.

Figure 19 After casting step 2.