RESEARCH PROJECT AT UNIVERSITY OF NEVADA, RENO

QUARTERLY REPORT

January 1, 2017 to March 31, 2017 Period

Year 1 Project

Development and Seismic Evaluation of Pier Systems w/ Pocket Connections and Square PT/UHPC Columns

Submitted by

M. Saiidi, A. Itani, and A. Mohebbi

Department of Civil and Environmental Engineering

University of Nevada, Reno

Reno, Nevada

Submitted

May 2017

TABLE OF CONTENTS

A. Description of Research Project 3

A.1 Problem Statement 3

A.2 Contribution to Expanding Use of ABC in Practice 4

A.3 Research Approach and Methods 4

A.4 Description of Tasks to Be Completed in Research Project 6

Task 1- Literature Review 6

Task 2- Preliminary Design of a Single Column Model 7

Task 3- Conduct Nonlinear Finite Element Analysis of Test Models 13

Model for Single Column Bent 13

Model for Two Column Bent 16

Task 4- Construct the Test Models, Conduct Shake Table 18

Single Column Bent 18

Construction, Tests, and Process Test Data 18

Lesson Learned 26

Two Column Bent 27

Construction, Tests, and Process Test Data 27

Task 5 – Conduct analytical studies of the column and pier models 34

Task 6 – Develop design method and numerical examples 38

Task 7 – Summarize the investigation and the results in a draft final report 45

A.5 Expected Results and Specific Deliverables 45

Year 1 Project: Development and Seismic Evaluation of Pier Systems w/ Pocket Connections and Square PT/UHPC Columns

UNR Project Website: http://wolfweb.unr.edu/homepage/saiidi/USDOT/index.html

ABC-UTC Project Website: http://abc-utc.fiu.edu/index.php/research/project/development-and-seismic-evaluation-of-pier-systems-with-pocket-connections

A. Description of Research Project

A.1 Problem Statement

Accelerated bridge construction relies heavily on prefabricated reinforced concrete members. Connections of prefabricated members are particularly critical in moderate and high seismic zones because earthquake forces place high demand on nonlinear deformation capacity of adjoining members. Structural integrity of the bridge has to be maintained by capacity-protected connections that experience no or little damage.

Various connections have been explored in the past few years. These connections may be placed in two categories of coupler and pocket connections. Promising results have been obtained for different versions of both categories, although much research and development have to be done before reliable and proven design methods of the type used in practice can be recommended.

With a few exceptions, past research on seismic response of ABC connections has focused on conventional reinforcing steel and concrete materials. The PI has pointed out that ABC provides an opportunity to improve the seismic beyond the target performance objectives of current codes, and this view has been well received by leading bridge earthquake engineers. Standard cast-in-place (CIP) bridges are designed to undergo large inelastic deformations to dissipate the earthquake energy, but must not collapse. It is understood that these bridges would

need to be decommissioned for major repair or replacement following the earthquake, at a time they are needed the most for a functioning lifelines for emergency response vehicles. A new paradigm is being promoted and being embraced by leading bridge engineers to utilize advanced materials. Research has been conducted to demonstrate the feasibility and merit of advanced materials for CIP construction. Through a FHWA Innovative Bridge Research and Deployment (IBRD) projects, some of these advanced materials are being implemented in an actual bridge. Specifically, advanced materials and methods are intended to minimize damage to plastic hinges and permanent drift of the bridge. The objective of the proposed project is to develop and evaluate earthquake-resistant yet resilient bridge piers that incorporate prefabricated elements for use in ABC in moderate and high seismic zones.

A.2 Contribution to Expanding Use of ABC in Practice

Despite numerous advantages of ABC, states in moderate and high seismic zones have not been able embrace ABC because of insufficient research results and guidelines for seismic design of prefabricated members and connections. Upon successful development and evaluation of the proposed bents, issues will be identified and addressed and preliminary design guidelines will be developed along with illustrative design examples to facilitate the adoption of the proposed designs and expand the use of ABC in practice. The potential improvements that the use of advanced materials will provide over conventional reinforced concrete could also serve as further incentive to states that might be hesitant in adopting ABC.

A.3 Research Approach and Methods

The overall objective of the proposed study is to develop and evaluate resilient bridge piers consisting of prefabricated columns and cap beams subjected to simulated earthquake loading on

shake tables. The study will focus on precast columns that are post-tensioned with unbonded carbon fiber reinforced polymer (CFRP) tendons and are connected to the footings and the cap beam using pocket connections. Specific objectives of the project are to determine:

a) the seismic performance of pocket connections with unbonded post-tensioned columns,
b) the seismic performance of square precast PT columns,
c) the effectiveness of CFRP tendons in minimizing residual displacements under strong earthquakes,
d) the performance of two different ultra-high performance concrete (UHPC) used in plastic hinges of solid and hollow columns, and
e) design considerations and methods for connections, CFRP PT columns, precast square columns, and plastic hinges with UHPC.

Pocket connections will be incorporated in the piers because this category of ABC connections has shown promising results while it does not violate the current AASHTO and Caltrans seismic codes because no mechanical couplers are utilized in pocket connections. Unbonded PT columns will be studied because it is known that unbonded PT reduces permanent drifts under seismic loads. CFRP tendons rather than steel will be utilized because based on extensive interaction of the PI with bridge designers, he is aware of reluctance of engineers in using unbonded tendons in concrete structures due to concerns for corrosion and the fact that CFRP is resistant to corrosion. Hollow columns will be included in the study, because they are lighter and can expedite construction. The study of different UHPC materials is intended to assess and compare the resilience of plastic hinges using some of the most promising materials. Development of design methods is intended to provide designers of piers for use in ABC. It is

envisioned that approximately one-third scale columns and pier models will be designed, constructed, and tested on a shake table.

A.4 Description of Tasks to Be Completed in Research Project

The study consists of the following tasks. The tasks are described and the status of each are presented in this section.

Task 1 – Literature Review 100% Completed

Accelerated bridge construction (ABC) has recently become popular due to its numerous advantages such as minimizing traffic delays and road closures, as well as reducing the construction time and efforts. ABC relies heavily on prefabricated reinforced concrete members. Connections of prefabricated members are particularly critical in moderate and high seismic zones because earthquake forces place high demand on nonlinear deformation capacity of adjoining members. Structural integrity of the bridge has to be maintained by capacity-protected connections that experience no or little damage. Various connections have been explored in the past few years. These connections can be placed in two categories of coupler and pocket connections. Promising results have been obtained for different versions of both categories, although much research and development have to be done before reliable and proven design methods of the type used in practice can be recommended.

One of the methods to connect prefabricated bridge columns to footings is pocket connections. This research project concentrates on these types of connections as they have shown promising results while not violating the current AASHTO and Caltrans seismic codes. Innovation concepts of this research project are as follows:

- Precast column and footing with pocket connection
- Post-tensioning using unbonded Carbon Fiber Reinforced Polymer (CFRP) tendons
- Ultra-High Performance Concrete (UHPC) in plastic hinge zone

This study focuses on a precast square column that is post-tensioned with unbonded carbon fiber reinforced polymer (CFRP) tendons and is connected to the footing using pocket connection. Specific objectives of the project are to determine:

a) the seismic performance of pocket connection with unbonded post-tensioned column,
b) the appropriate embedment length of square precast columns in pocket connections
c) the effectiveness of CFRP tendons in minimizing residual displacements under strong earthquakes,
d) the optimized level of PT force based on column geometric and strength characteristics
e) the performance of ultra-high performance concrete (UHPC) used in plastic hinge zone of the square column, and
f) design considerations and methods for connections, CFRP PT columns, precast columns, and plastic hinges with UHPC.

Task 2 – Preliminary Design of a Single Column Model 100% completed

To accomplish the objectives of the study, a 1/3 scale of a square bridge column was designed according to AASHTO Guide Specifications for LRFD Seismic Bridge Design for a location in down town Los Angeles, CA. Figures 1-3 show the geometry and cross section of the column as well as footing details. The properties of the bridge column is given in Table 1.

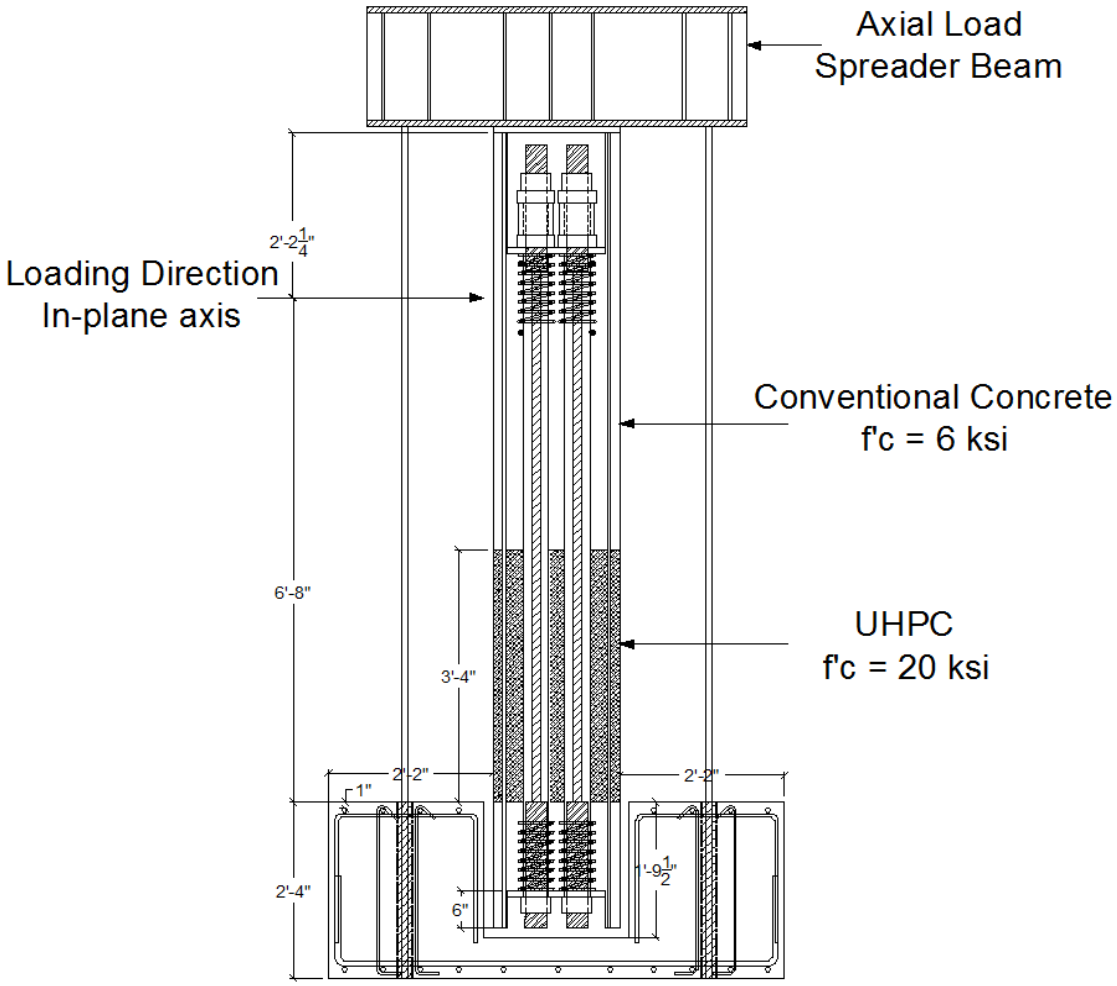

Figure 1. Geometry of the column model

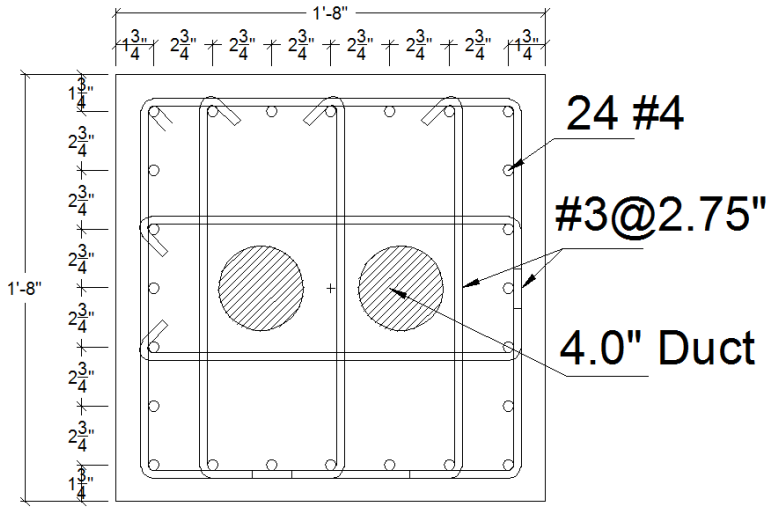

Figure 2. Cross section of the column

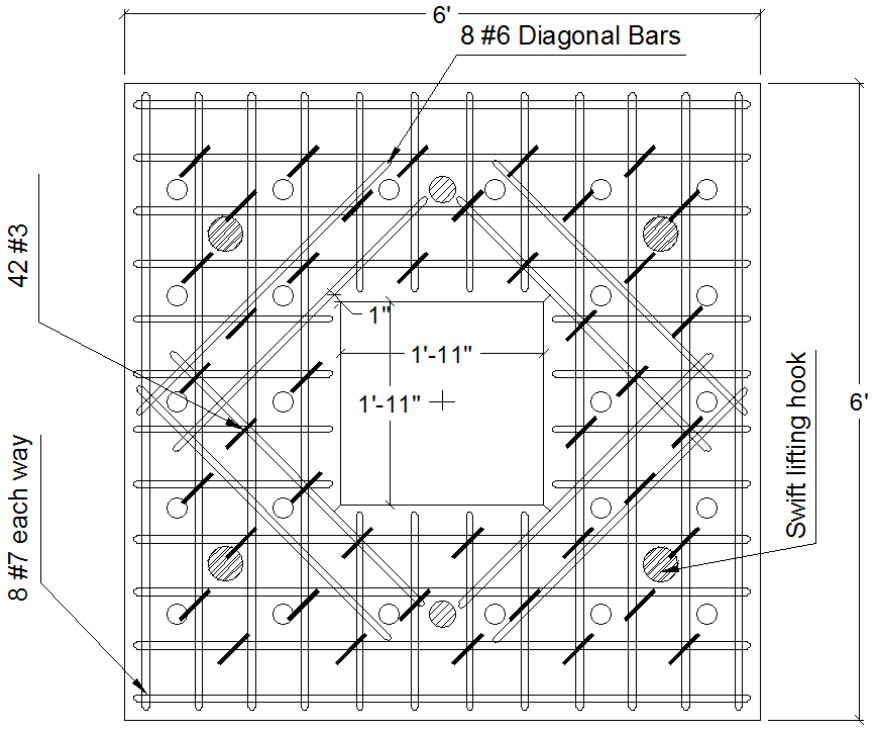

Figure 3. Footing details

Table 1. Properties of the column

Scale factor	1/3
Column dimensions (inch)	20” x 20”
Column height (inch)	80”
Aspect ratio	4.0
Column longitudinal bar	24 - #4
Column long. steel ratio	1.2%
Column transverse steel	#3 @ 2.75”
Column transverse steel ratio	1.6%
Dead load (kip)	100.0
Initial posttensioning force per tendon (kip)	64.0
Effective cross sectional area per tendon (in^2)	0.88
Axial load index (DL+PT)	14.25%
Embedment length of the column (inch)	20.0”
Pocket dimensions (inch)	23” x 23”
Pocket depth (inch)	21.5”
Gap in pocket connection (inch)	1.5”
UHPC height (inch)	40.0”
Estimated base shear (kip)	100.0

A 1/3 scale of two column bent was designed according to AASHTO Guide Specifications for LRFD Seismic Bridge Design. The geometry of the bent is shown in Fig. 4. The columns had moment connection at the top and pin connection at the bottom. Using ABC pocket connection, the precast columns were inserted into the precast footing and extended in the precast cap beam. The embedment length of the columns for the pocket connections was 1.0 times the column dimension at the top and 1.35 times the column dimension at the bottom. UHPC and ECC were used in the plastic hinges to minimize seismic damage. The height of UHPC and ECC was 1.5 times the column dimension. Figures 5-8 show cap beam and footing details. The properties of the two-column bent are summarized in Table 2.

Table 2. Properties of the two column bent

Scale factor	1/3
Bent cap dimensions (inch)	19” x 26”x 134”
Footing dimensions (inch)	23” x 36” x 132”
Column dimensions (inch)	14” x 14”
Column clear height (inch)	61.0”
Aspect ratio	4.35
Column long. bar	8 - #5
Column long. steel ratio	1.26%
Column transverse steel	#3 @ 2.0”
Column transverse steel ratio	2%
Long. bar at hinge section	6 #5
Long. steel ratio at hinge section	2.36%
Transverse steel at hinge section	#3 @ 1.5”
Axial load index	6.4%
Embedment length of the column at the top (inch)	14.0”
Embedment length of the column at the bottom (inch)	19.0”
Gap in pocket connection (inch)	1.0”
Dead load (kip)	100.0
$M_{p.Hinge}$ / $M_{p.Col}$	40%
Base shear (kip)	72
Shear demand (left col., right col.) (kip)	29 , 43
Column shear capacity (left col., right col.) (kip)	74 , 74
Hinge shear capacity (left col., right col.) (kip)	47 , 79

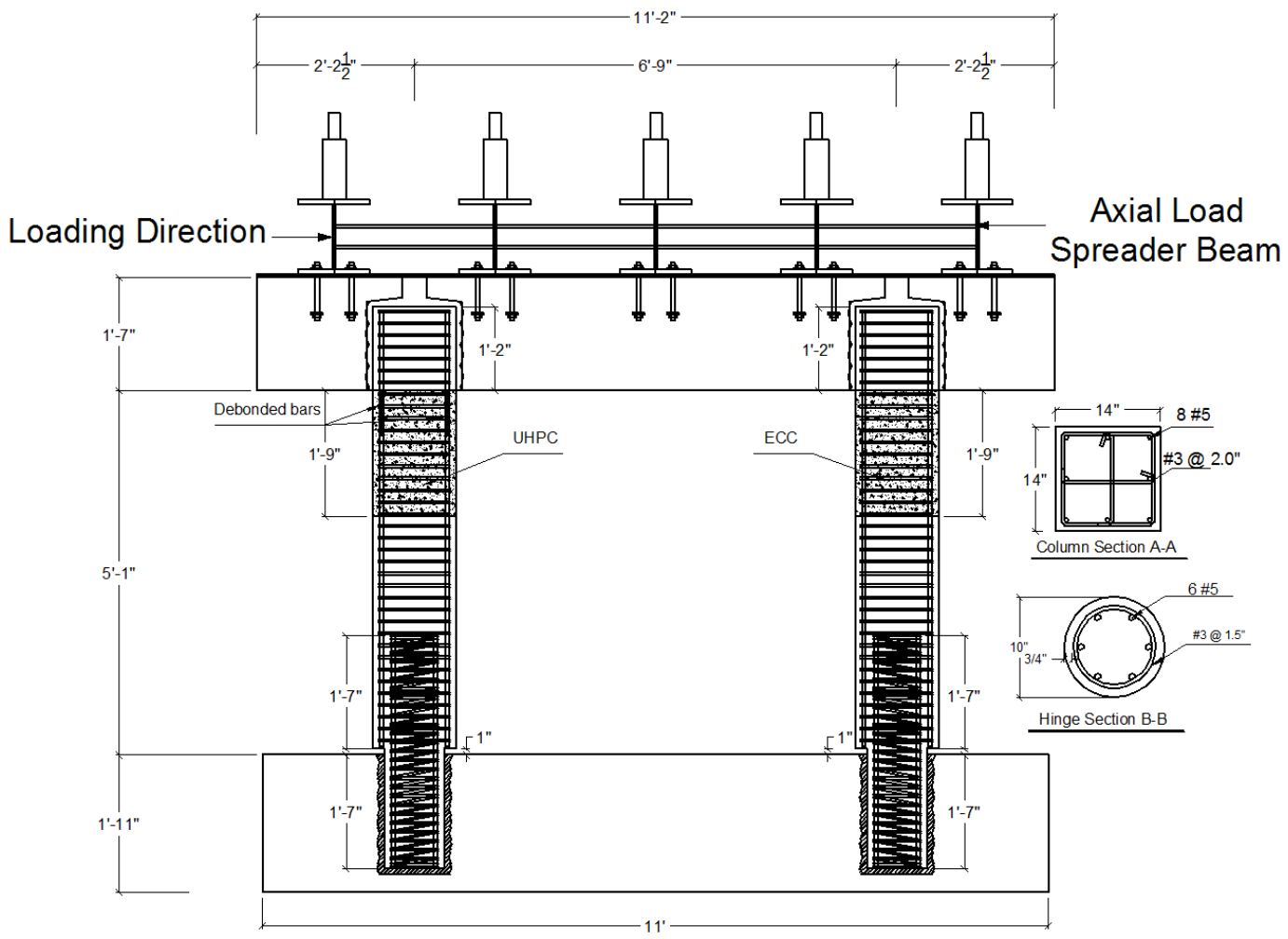

Figure4. Geometry of the two column bent model

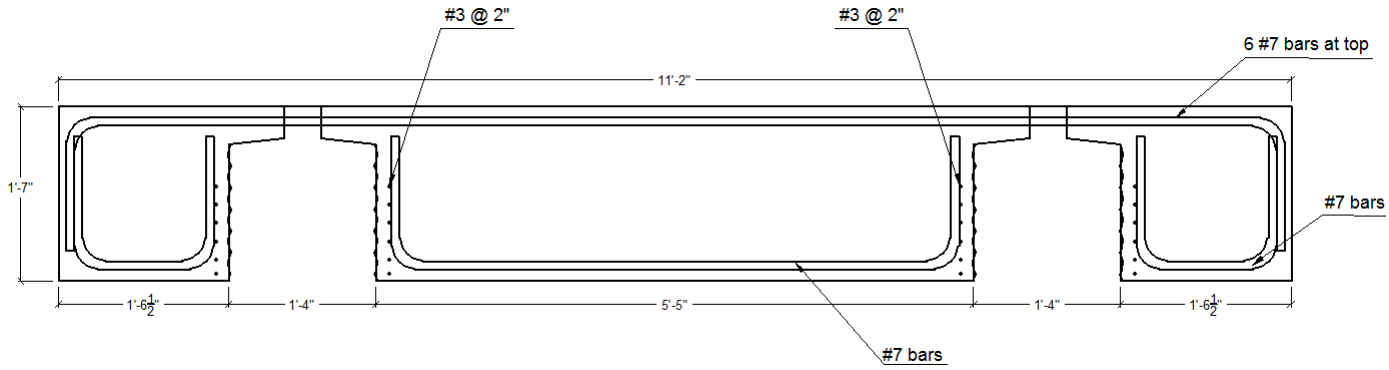

Figure 5. Cap beam details

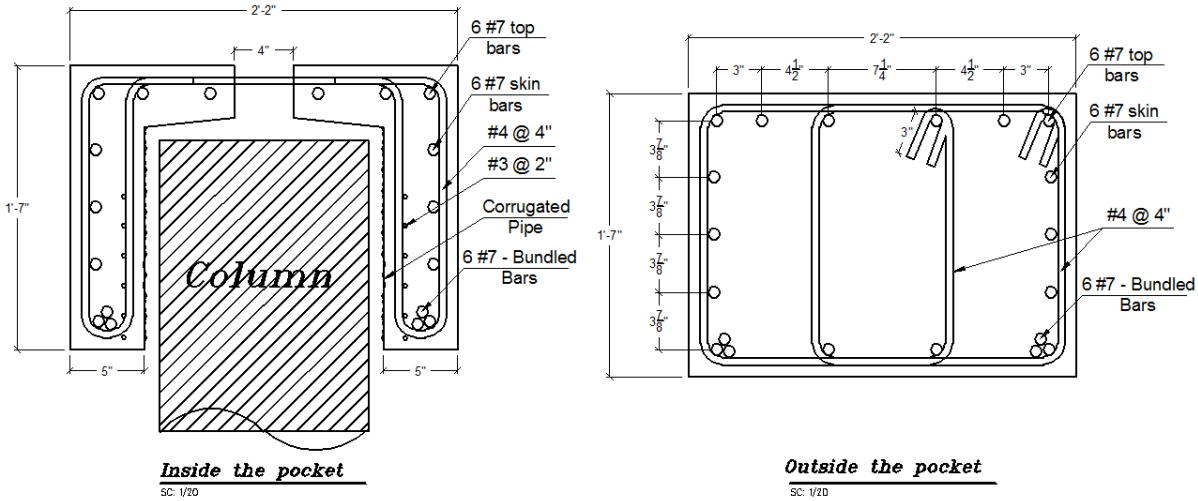

Figure 6. Cap beam cross section

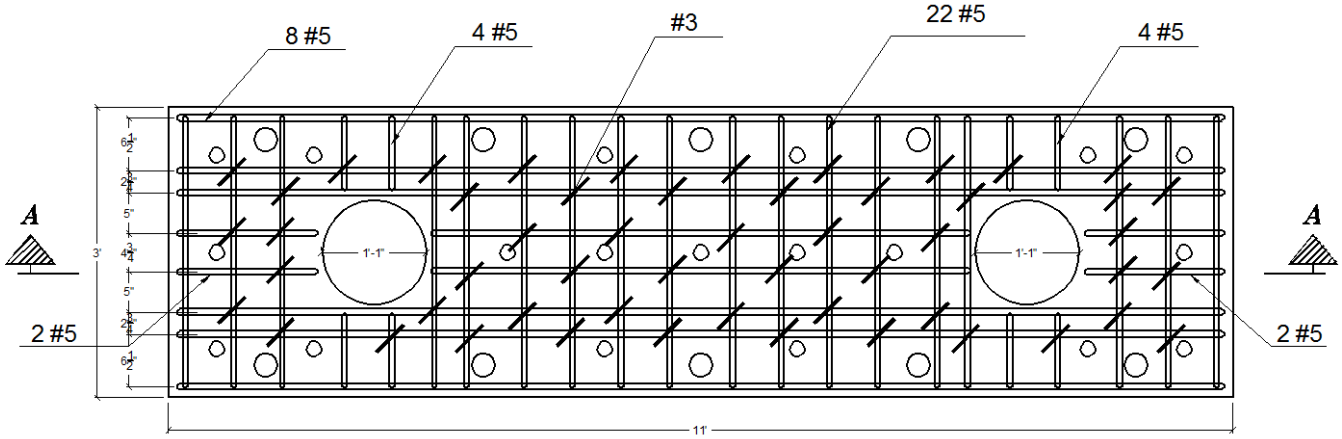

Figure 7. Footing details

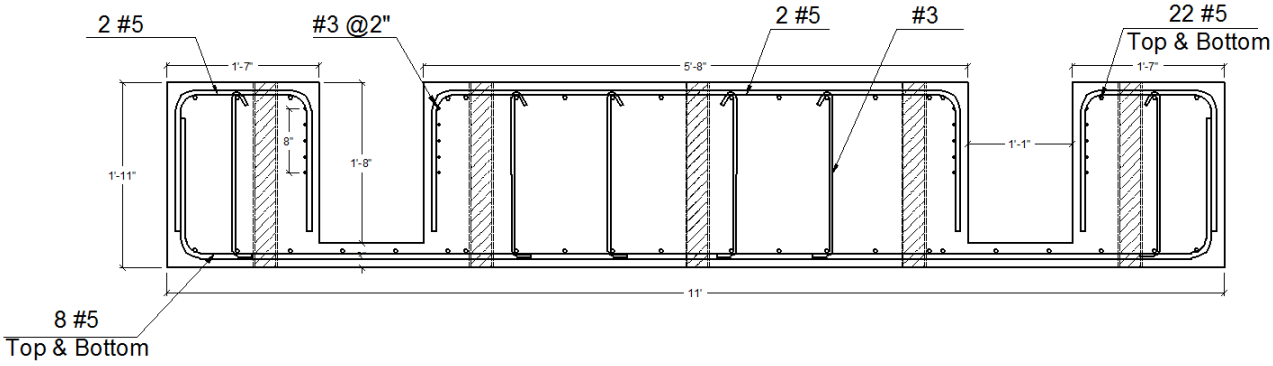

Figure 8. Footing section A-A

Task 3 – Conduct Nonlinear Finite Element Analysis of Test Models

Model for Single Column Bent 100% Completed

Nonlinear pushover analysis was applied to the column model to determine nonlinear behavior of the bridge column. Figure 9 shows the pushover curve of the column model. According to the pushover curve, the column reached 8% drift. Figure 10 shows the axial load variation of the column due to elongation of CFRP tendons during pushover analysis. According to Figure 10, axial load in CFRP tendons has been increased approximately by a factor of 3.5 times the initial posttensioning force. Figure 11 shows stress-strain relationships of CFRP tendons during pushover analysis. The guaranteed capacity of CFRP tendons is 306 ksi and tendons reached to 90% of the guaranteed capacity.

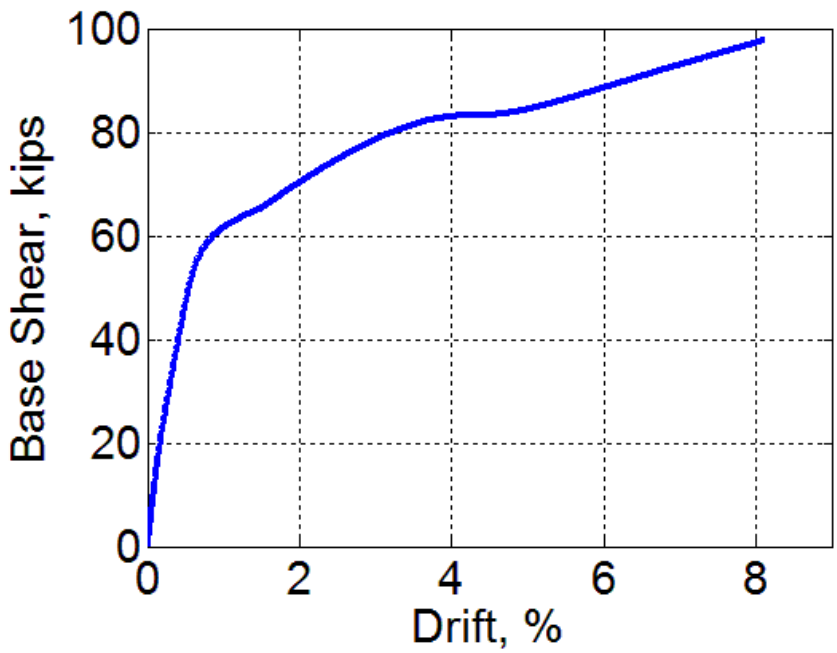

Figure 9. Pushover curve of the column model

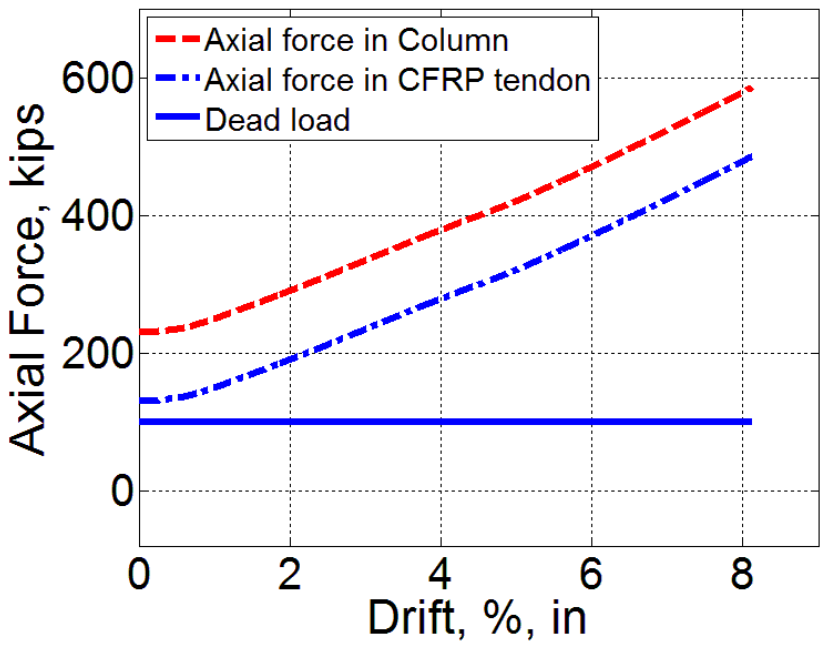

Figure 10. Axial load variation of the column and CFRP tendons

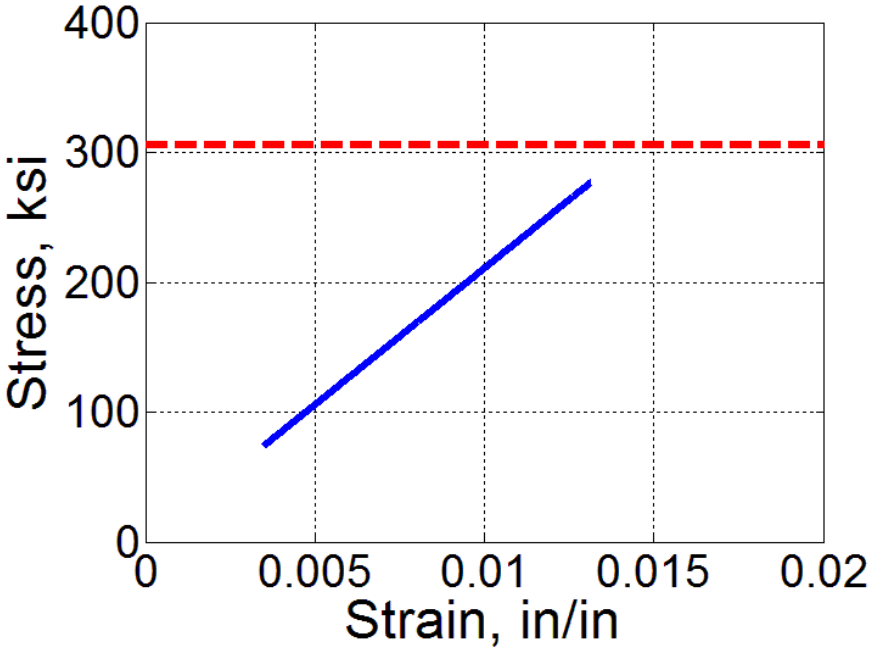

Figure 11. Stress-strain relationship of CFRP tendons

Nonlinear response history analysis was applied to the column model for different near fault ground motions to investigate the effectiveness of the self-centering system in minimizing the residual drifts. The analysis was performed for the novel column as well as two other identical conventional columns without posttensioning elements. As representative response, the results of two ground motions, 1994-Northridge at Rinaldi station and 1978-Tabas, are represented. Figure 12 and Figure 13 show residual drifts vs. peak drifts for different levels of Rinaldi and Tabas earthquakes, respectively. According to the results, the residual drifts of the novel column for different levels of the earthquakes are almost zero.

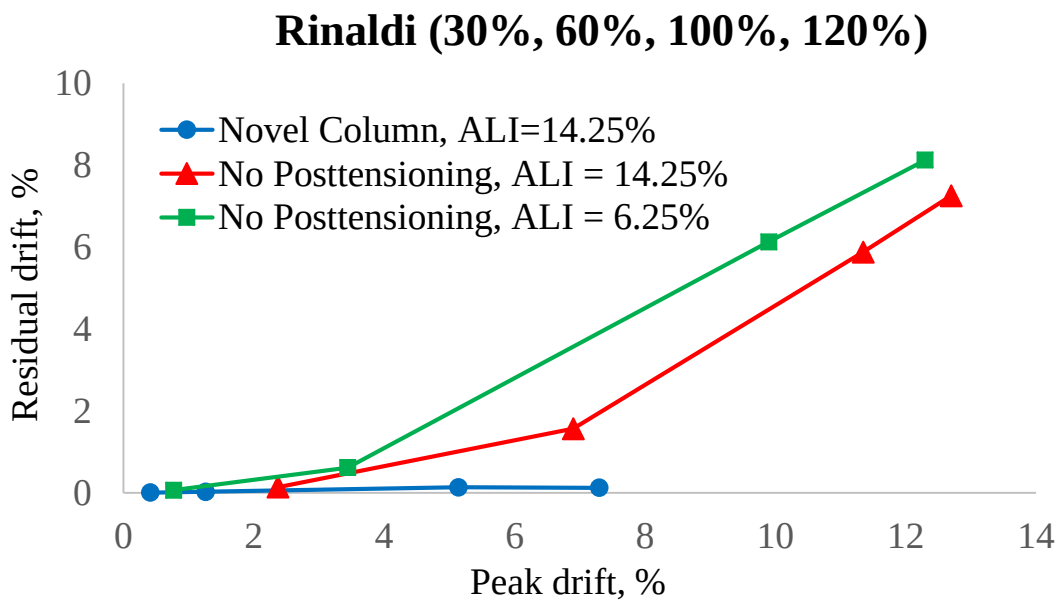

Figure 12. Residual drifts vs. peak drifts for different levels of Rinaldi earthquake

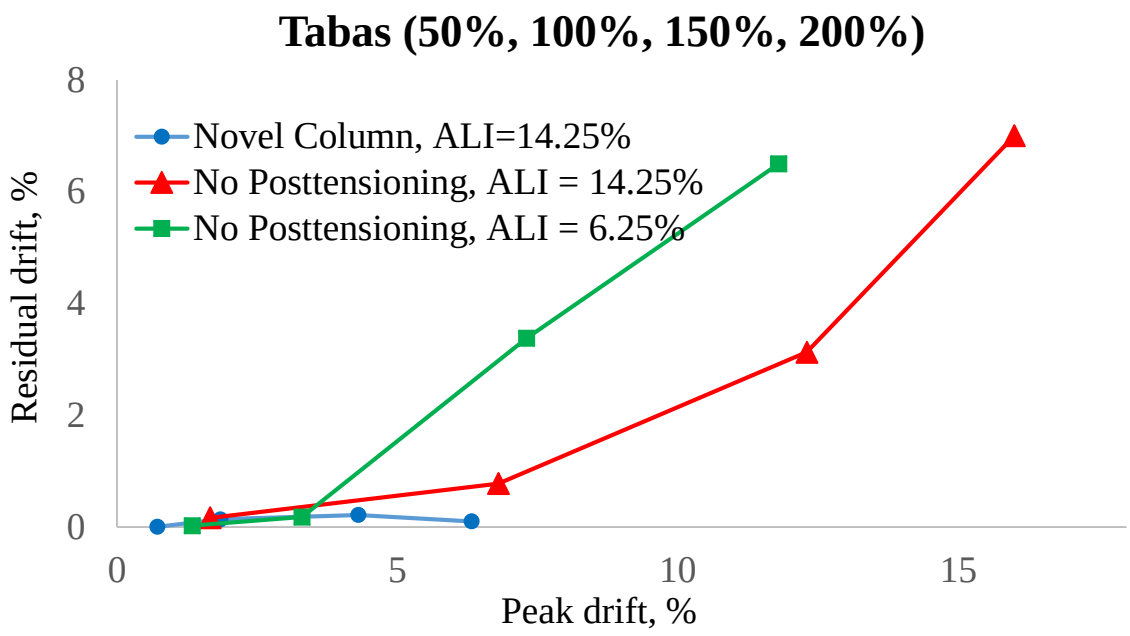

Figure13. Residual drifts vs. peak drifts for different levels of Tabas earthquake

Model for Two Column Bent **100% Completed**

Nonlinear pushover analysis was applied to the two column bent model to determine nonlinear behavior of the bent. Figure 14 shows the pushover curve of the model. According to the pushover curve, the columns reached approximately 10% drift. Figure 15 shows the axial load variation of the columns due to framing action.

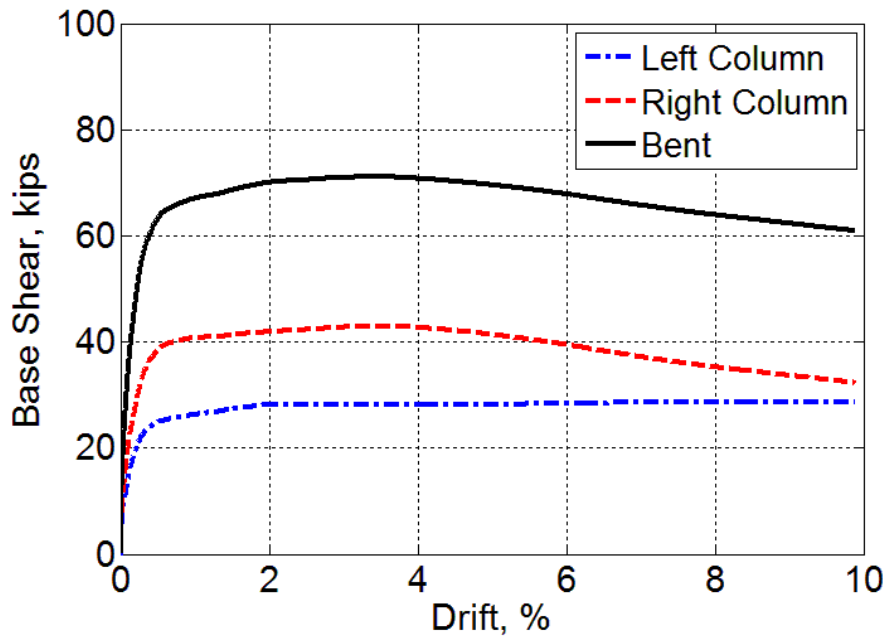

Figure 14. Pushover curve of the two column bent model

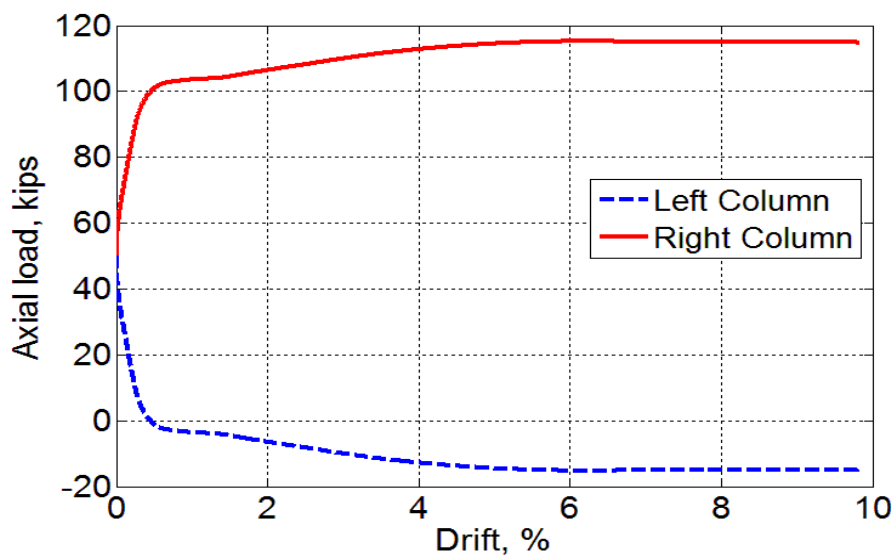

Figure 15. Axial load variation of the two column bent model

Task 4 – Construct the Test Models, Conduct Shake Table Single Column Bent Construction, Tests, and Process Test Data 100% Completed

A 1/3 scale of a precast novel column model was constructed and posttensioned using CFRP tendons. The plastic hinge zone is made with UHPC. The novel column was inserted into the precast footing, which had a pocket area in the middle for the column. Afterwards, UHPC material was used to fill the gap between the column and the footing. Figure 16 shows a schematic representation of the test model. Figures 17-19 show CFRP tendons and anchorages, precast footing, and the final column model, respectively.

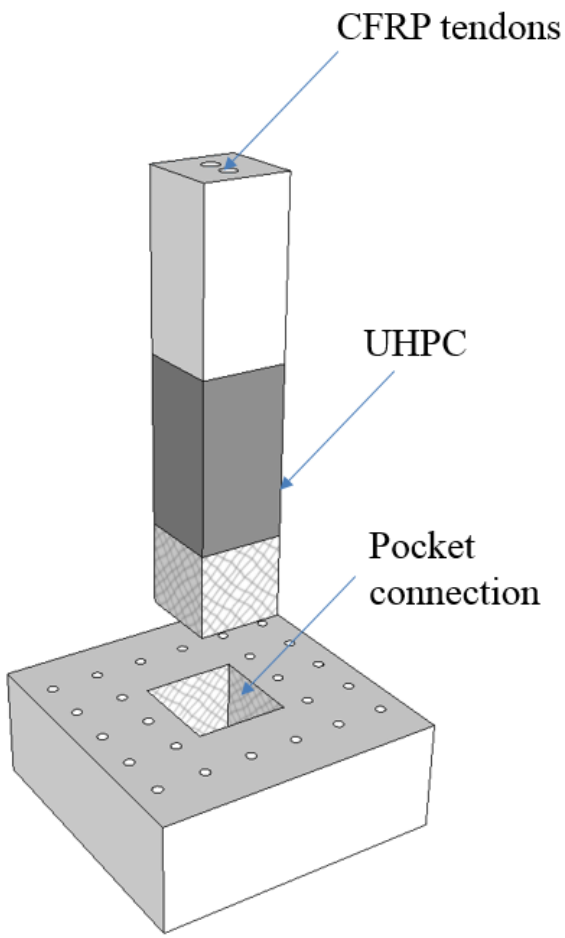

Figure 16. Schematic representation of the test model

Figure 17. CFRP tendons and anchorages

Figure 18. Precast footing with pocket area in the middle

Figure 19. Insert precast column into the precast footing

The column was designed according to AASHTO Guide Specifications for LRFD Seismic Bridge Design assuming the bridge was located in Los Angeles area at Lake Wood, with the latitude and longitude of 3.84926 N, and 118.09252 W, respectively. Seismic properties of this location were as follows: As=0.473g, SDS=1.155g, SD1=0.637g, To=0.11 sec, Ts=0.552 sec, Site class: D. The 1994 Northridge earthquake acceleration history recorded at the Rinaldi station was simulated in the shake table test because of its tendency to cause large permanent displacements in conventional reinforced concrete columns. The time scaled acceleration and velocity histories for this near-fault motion are shown in Fig. 20 and Fig. 21. Figure 22 shows

the scaled design spectrum and response spectrum of the selected ground motion. A total of six runs, 25%, 50%, 100%, 133%, 167%, and 200% design level, were applied in the shake table test to capture the seismic response of the novel column under different levels of earthquake. Figure 23 shows the test set up.

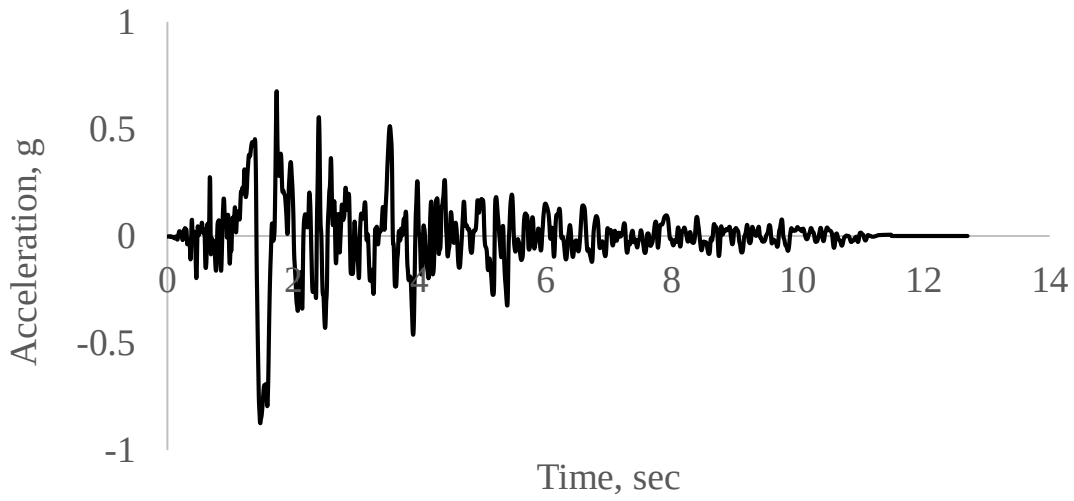

Figure 20. Scaled acceleration history for Rinaldi

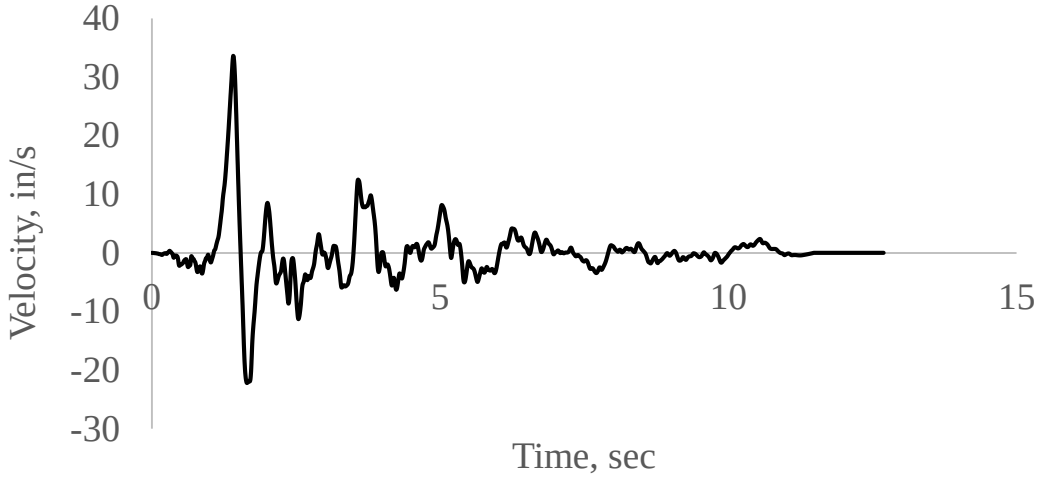

Figure 21. Scaled velocity history for Rinaldi

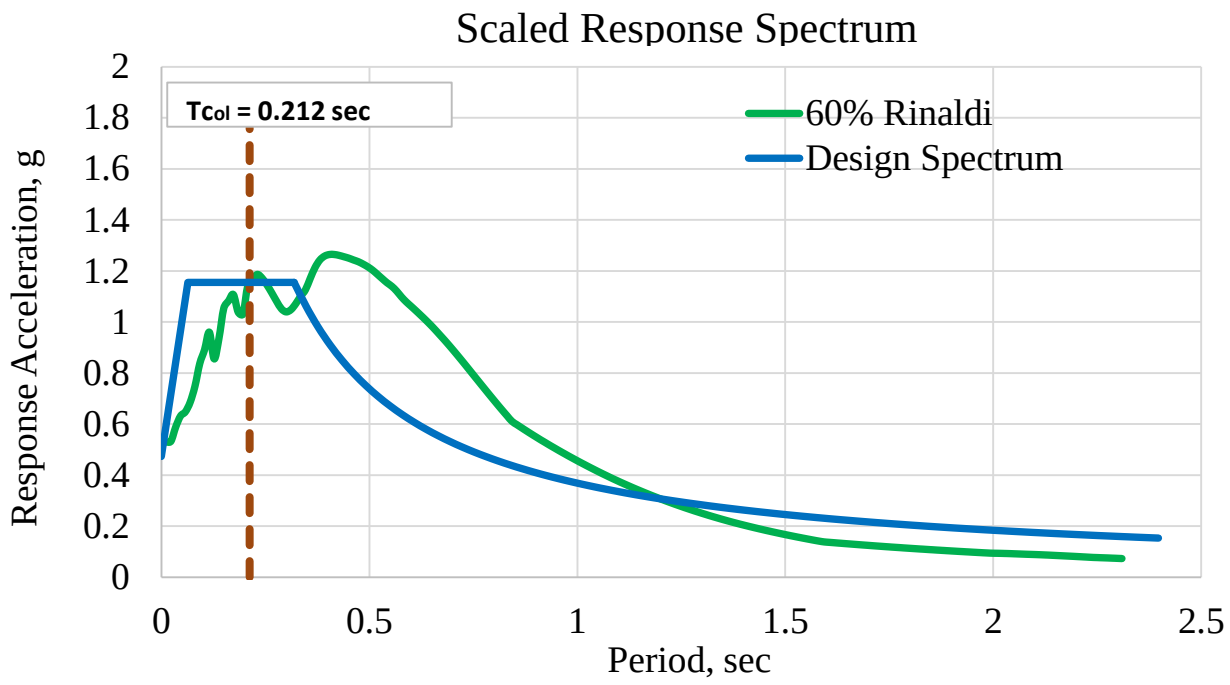

Figure 22. Scaled response acceleration

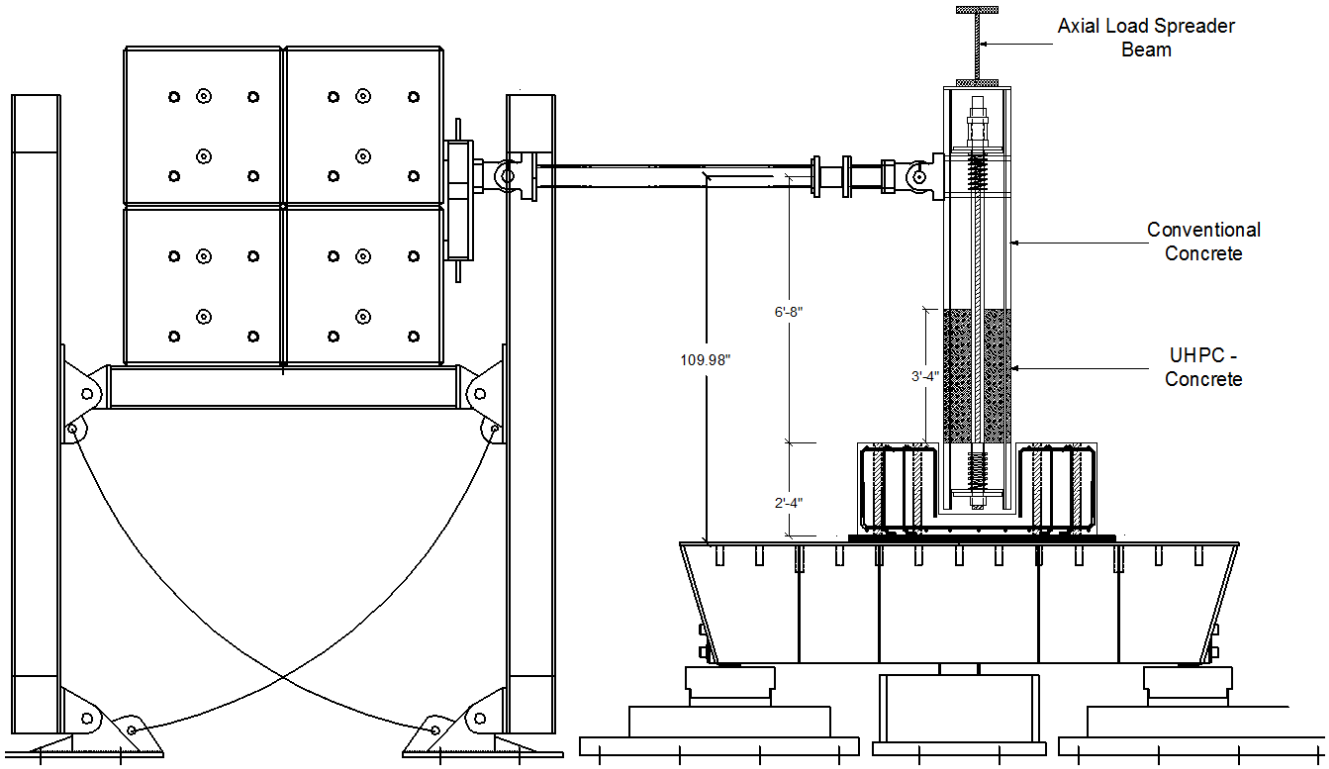

Figure 23. Shake table test set up

The column has been tested on a shake table (Fig. 24). Figure 25 shows the hysteresis loops of the column during the six runs. According to the experimental results, the novel column reached approximately 7% drift, and the residual displacement was nearly zero at the end of each run. Figure 26 shows the maximum drift vs. period of the column for each run. The period of the column varied from 0.209 sec to 0.452 sec during the test. Figure 27 shows the maximum drift vs. damping ratio for each run. The damping ratio of the column varied from 0.94% to 4.54% during the test. Table 3 summarizes the maximum displacement and base shear achieved for each run.

Figure 24. Shake table test set up

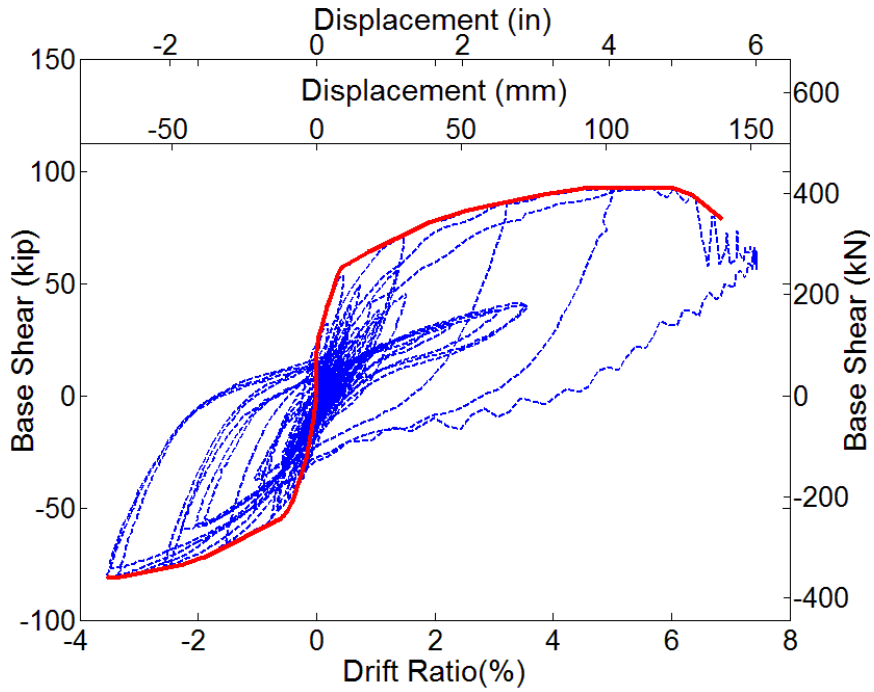

Figure 25. Hysteresis loops of the novel column

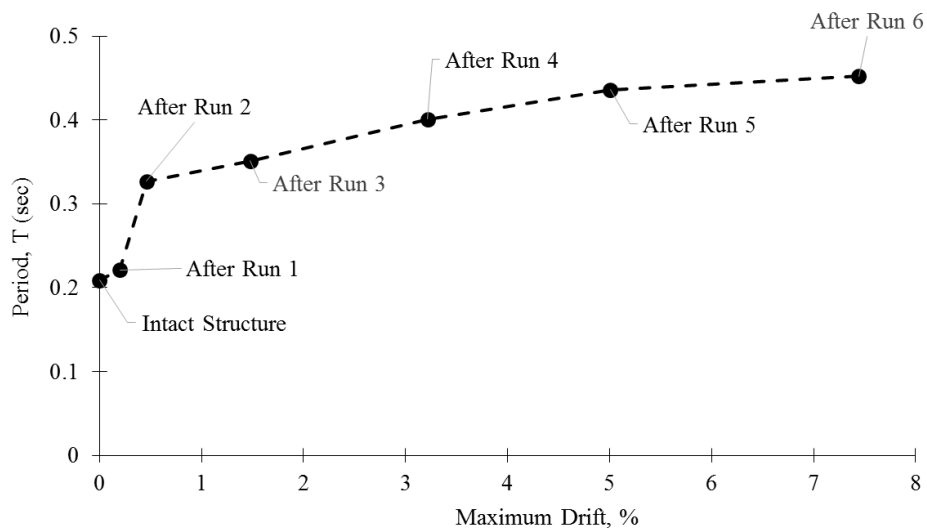

Figure 26. Maximum column drift vs. period for each run

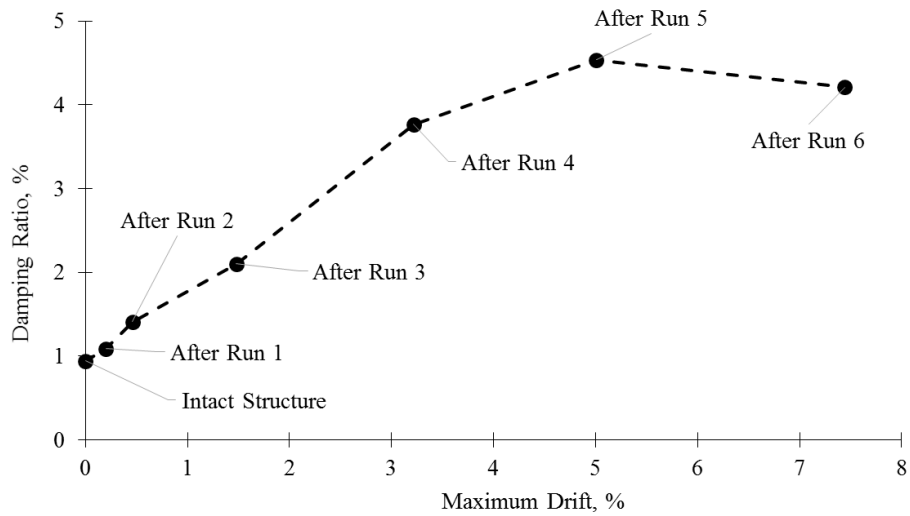

Figure 27. Maximum column drift vs. damping ratio for each run

Table 3. Maximum displacement and base shear for each run

	Displacement		Base Shear	
	in [mm]		kip [kN]	
	Positive	Negative	Positive	Negative
Run #1	0.16 [4.1]	-0.13 [-3.3]	32.35 [143.89]	-26.31 [-117.03]
Run #2	0.37 [9.4]	-0.3 [-7.6]	53.42 [237.62]	-41.78 [-185.85]
Run #3	1.19 [30.2]	-0.61 [-15.5]	70.26 [312.53]	-56.35 [-250.66]
Run #4	2.59 [65.8]	-1.98 [-50.3]	85.47 [380.19]	-76.16 [-338.78]
Run #5	4.03 [102.4]	-2.69 [-68.3]	92.43 [411.15]	-80.93 [-360]
Run #6	5.52 [140.2]	-2.84 [-72.1]	78.62 [349.72]	-81.03 [-360.44]

Figure 28 shows the damage state of the column at the plastic hinge and the pocket connection after the 200% design level earthquake was applied. According to the test

observations, the pocket connection performed well without significant damage at the pocket area and the footing.

Figure 28. Damage state of the novel column after 200% design earthquake

Lesson learned

- The embedment length of 1.0 times the column dimension was sufficient to provide full fixity at the base in the pocket connection and development of the full column flexural capacity.
- UHPC in the plastic hinge eliminated the seismic damage and concrete spalling. Due to the high compressive strength of UHPC, the column failure mode was rebar rupture rather than core concrete failure.
- CFRP tendons effectively eliminated residual drifts during different levels of earthquakes and can be used as a replacement for steel tendons in bridge columns.

Two – Column Bent Construction, Tests, and Process Test Data 100% Completed

Construction of the two column bent model was completed in March 2016 and the model was tested on a shake table at UNR on April 27, 2016. Figures 29 to 34 show various stages of construction of the two-column bent.

Figure 29. Cap beam construction and pocket for columns

Figure 30. Footing and pockets for columns

Figure 31. Column reinforcement cage

Figure 32. Placing UHPC/ECC in plastic hinge zone simultaneously with concrete

Figure 33. Inserting the second precast column into the footing

Figure 34. Inserting cap beam on top of the columns

Pretest pushover and nonlinear dynamic analysis of the bent was conducted and the shake table testing protocol was developed accordingly. The 1994 Northridge Sylmar Station record was simulated in the shake table tests. The response spectrum for this record superimposed on the design spectrum is shown in Figure 35. The target input acceleration records simulating the effect of earthquakes with different intensities are shown in Figure 36.

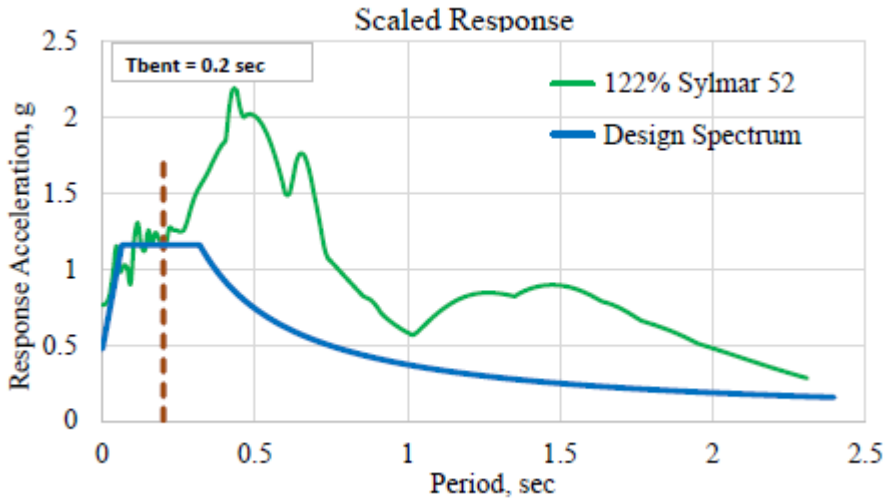

Figure 35. Sylmar 1994 and design spectra

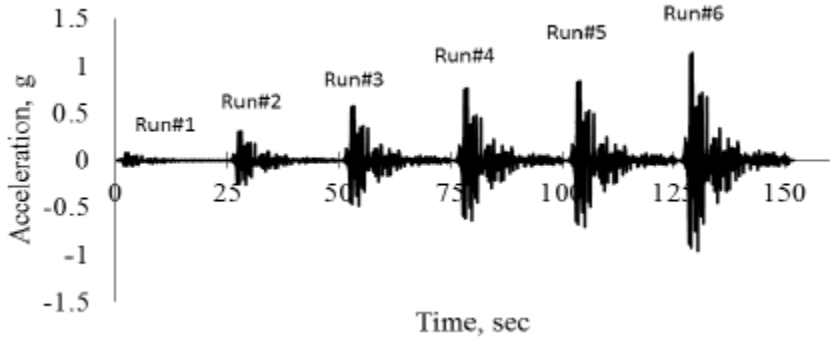

Figure 36. Target input accelerations for shake table testing simulation

Run 4 in Fig. 36 corresponds to the design level earthquake with a PGA of 0.76g. The model failed during Run 6 due to fracture of longitudinal steel bars in the top plastic hinges. The target input acceleration in Run 6 corresponded to 150% of the design earthquake with a PGA of 1.14g.

Figure 37 and 38 show the damage state of the top plastic hinges with ECC and UHPC, respectively, under the design earthquake. It can be seen that there was only minor cracking of ECC and no joint damage. Figure 38 shows no damage in the UHPC plastic hinge, but some minor spalling of the concrete at the bottom of the cap beam.

Figure 37. Damage state of ECC plastic hinge and pocket connection under design motion

Figure 38. Damage state of UHPC plastic hinge and pocket connection under design motion

There was no damage in the two-way hinges at column bases in either column (Fig. 39).

Figure 39. Damage state of two-way hinge under design motion

Figure 40 to 42 show the damage states at the ECC plastic hinge, UHP plastic hinge, and one of the two-way hinges under 150% design earthquake, which led to failure. It is evident in Fig. 40 that ECC spalled and the column longitudinal bars were exposed. Some minor cracking was also observed at the bottom of the cap beam. Figure 41 shows that UHPC suffered no significant damage despite the severity of the earthquake. However, there was significant damage in the grout and the bottom of the beam in the pocket connection region. The high strength and stiffness of UHPC shifted the damage to the lower part of the cap beam. The two-say hinge remained free from any apparent damage although some cracking was observed in the hinge throat (Fig. 42).

Figure 40. Damage state of ECC plastic hinge and pocket connection under 150% design motion

Figure 41. Damage state of UHPC plastic hinge and pocket connection under 150% design motion

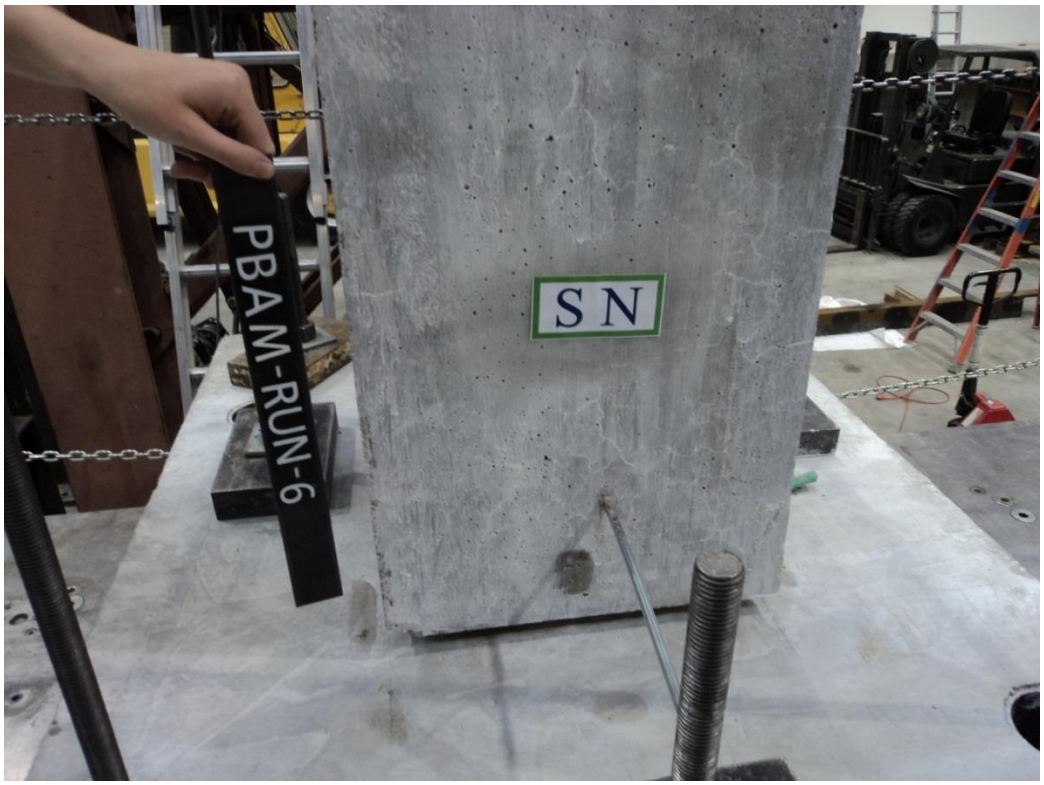

Figure 42. Damage state of two-way hinge under 150% design motion

Task 5 – Analytical studies of the column and pier Models 100% Completed

Single-Column Test Model - Post-test analytical studies of the column model have been in progress. A sample of OpenSees analysis results showing the calculated and measured displacement histories for different runs is shown in Fig. 43. The achieved shake table motions and the measured material properties were used in the analysis. It can be seen that the correlation between the calculated and measured results was excellent for all the Runs including Run 6 during which the column failed.

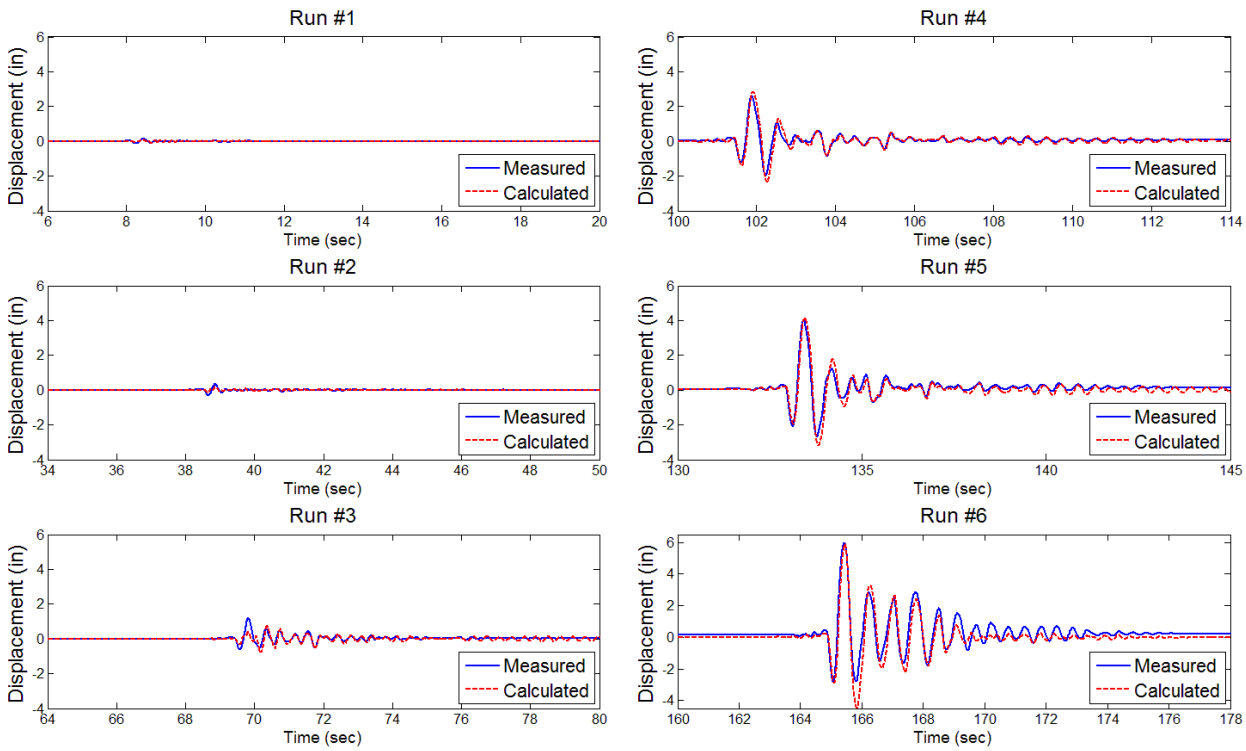

Figure 43- Measured and calculated displacement histories for the PT column model

The measured and calculated lateral force displacement hysteresis curves for Run 3 to 6 are shown in Fig. 44. Run 3 corresponds to a relatively small level of material nonlinearity. The analytical model was not able to capture the hysteresis behavior closely. Run 4 and 5 correspond to 100% and 125% of design earthquakes, respectively. The correlation between the measured and calculated curves was excellent. The column model failed during Run 6. It can be seen that the analytical model led to good correlation until the fracture of the longitudinal bars (indicated by the drop in the lateral force in the right side of the outermost loop in Fig. 44). The analytical model did not capture the bar fracture, and the calculated maximum displacement in the negative direction exceeded the measured displacement in the reversed cycle subsequent to the bar fracture.

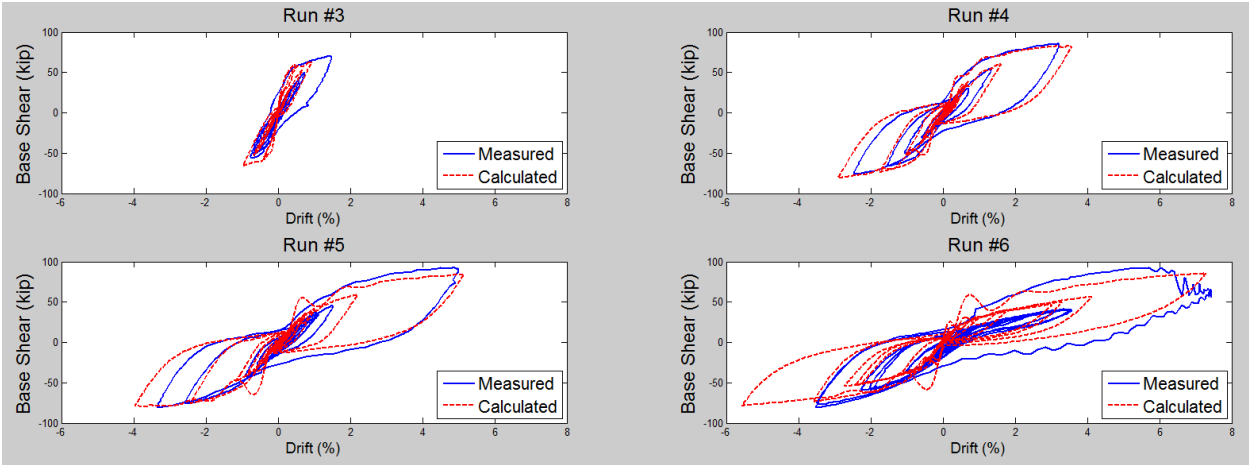

Fig. 44 – Measured and calculated hysteresis curves for the single column model

Two-Column Pier Model - The analysis was carried out using OpenSEES. The analytical model of the pier is shown in Fig. 45.

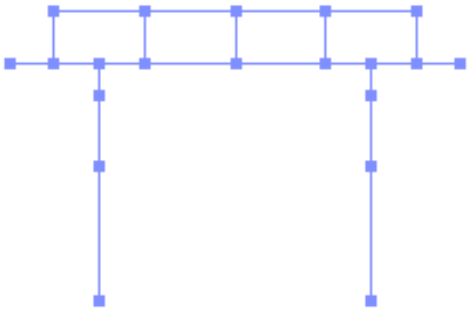

Fig. 45 – OpenSees model of the pier model

The calculated and measured response history analysis results using 2% damping for a low-, moderate-, and high-amplitude run are shown in Fig. 46. Run 6 was the failure run, in which some of the bars fractured and concrete core was damaged to various degrees, effects of which were not included in the analysis. It can be seen in Fig. 46 that the correlation between the measured and calculated results is reasonable for all three earthquake runs.

The measured and calculated base shear histories for the aforementioned three runs are shown in Fig. 47. It is clear that the analytical model successfully captured the peak forces and waveforms in most cases. Some discrepancies were noted in the low-amplitude parts of the responses but they are believed to be insignificant.

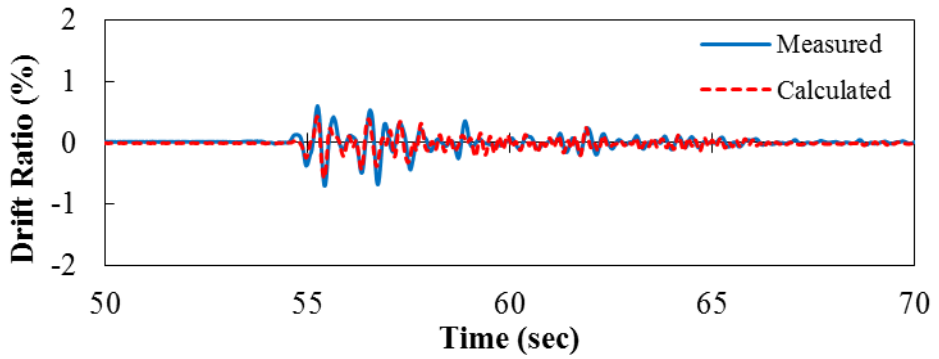

(a)

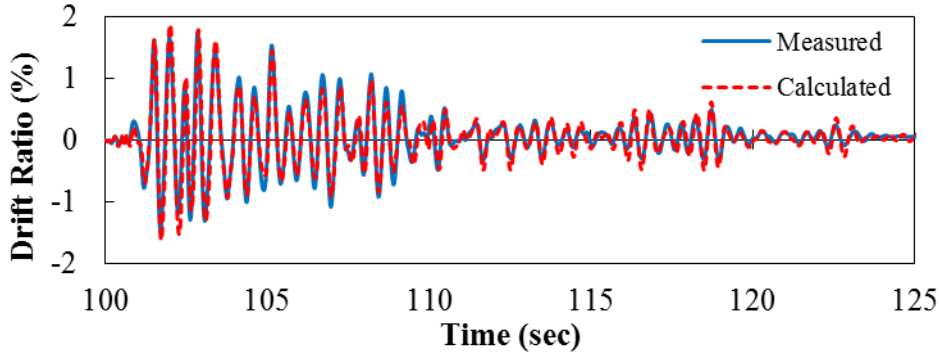

(b)

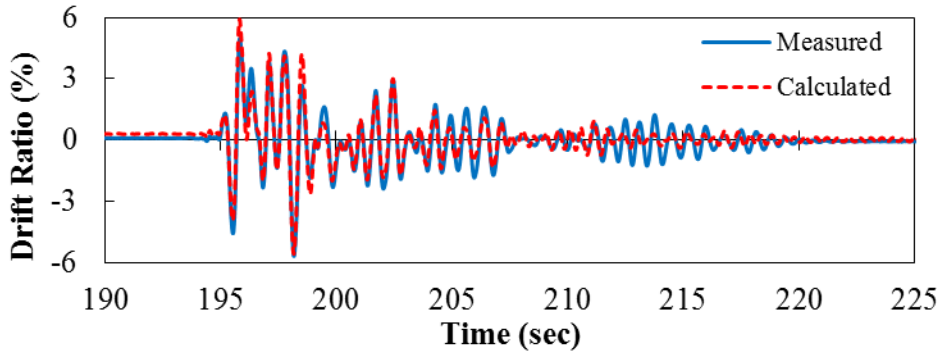

(c)

Fig. 46 – Measured and calculated displacement histories of the pier for (a) Run 2, (b) Run 4, and (c) Run 5 using 2% damping.

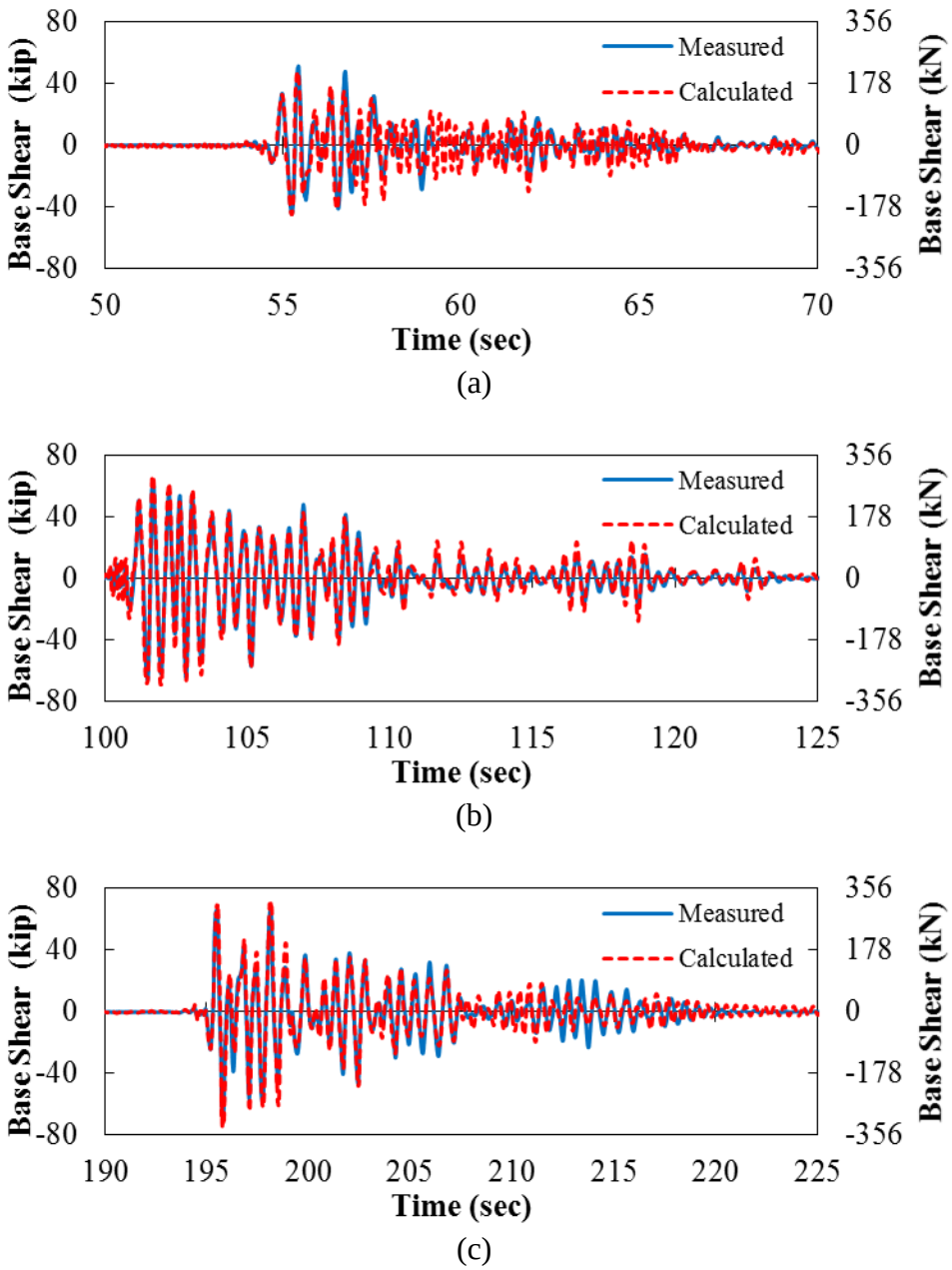

Fig. 47 – Measured and calculated base shear histories of the pier for (a) Run 2, (b) Run 4, and (c) Run 5 using 2% damping.

Task 6 – Develop design method and numerical examples 100% Completed

Seismic design methods for square and rectangular column-cap beam pocket connections, square and rectangular column-footing pocket connections, and unbonded CFRP tendons for posttensioned bridge columns were developed based on the experimental results and the

analytical investigations. Rectangular columns are included because it was believed that the research results on square columns are applicable. Recommendations were also developed for UHPC/ECC length in column plastic hinge zones. The design steps in each method were illustrated in three design examples.

Design of Square or Rectangular Column-Cap Beam Pocket Connections

A step-by-step design procedure for square column-cap beam pocket connections was developed. The objective and highlights of each step are presented in this quarterly report. Figure 48 shows the details of the design example:

- Step 1. Determine the pocket dimension- The dimensions are based on the column cross section dimensions plus a recommended gap thickness of 38 mm (1.5 in) to 102 mm (4 in)
- Step 2. Determine the minimum pocket depth- The pocket was sufficiently deep to allow for full anchorage of the column in the cap beam. The minimum depth is based on three limits that are obtained from experimental results, anchorage of column longitudinal bars, and equilibrium of forces in the pocket.
- Step 3. Determine the minimum cap beam depth- The cap beam should be sufficiently deep to accommodate the pocket and avoid punching shear failure above the pocket once the beam is placed on top of the column before the gap is filled.
- Step 4. Determine the minimum cap beam width- The cap beam should be sufficiently wide to accommodate the beam reinforcement and ensure elastic behavior of the cap beam under combined gravity and seismic loading.
- Step 5. Opening for grout placement- An opening should be left at the top of the cap beam pocket for placing grout or UHPC.

- Step 6. Design of cap beam longitudinal reinforcement- The cap beam longitudinal reinforcement should be designed according to AASHTO. The bottom longitudinal bars should be bundled and placed outside the pocket to avoid interference with the precast columns.
- Step 7. Design of cap beam transverse reinforcement- Vertical stirrups inside and outside the pocket connection should satisfy AASHTO requirements in section 8.13.5.1.
- Step 8. Design of diagonal reinforcement- According to the experimental results and analytical investigations in this project, diagonal bars around the pockets are required to help resist stresses at the corners. The area of the diagonal bars should be one-third of the required bottom longitudinal bar area of the cap beam at the column face.
- Step 9. Principal stress checks- Moment-resisting joints should satisfy the AASHTO section 8.13.2 requirements.

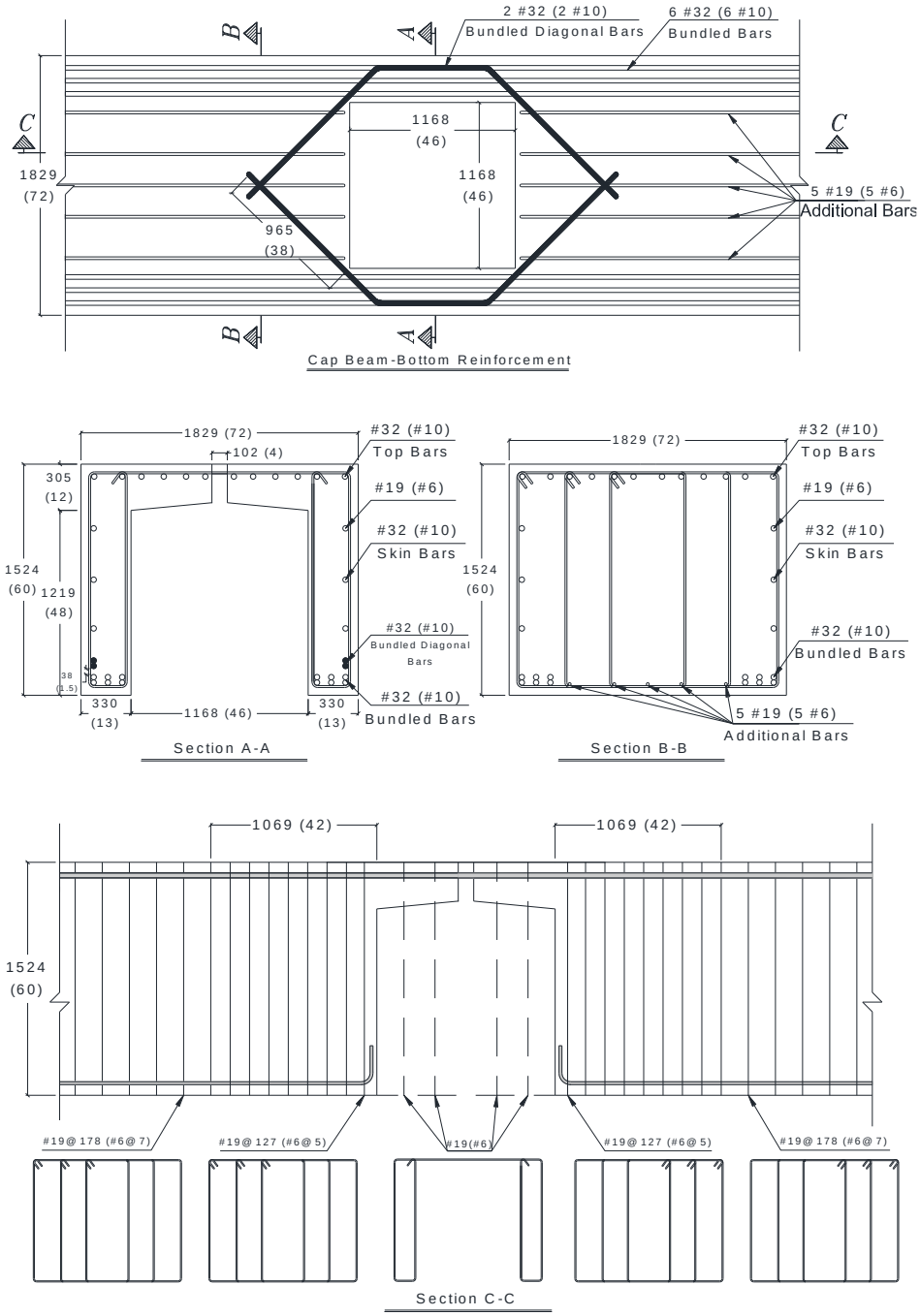

Figure 48. Design of square column-cap beam pocket connections [units are mm (in)]

Design of Square or Rectangular Column-Footing Pocket Connections

A step-by-step design procedure of square column-footing pocket connections was developed as summarized below. Figure 49 shows the details of the design example.

- Step 1. Determine the minimum pocket dimension- See step 1 in the previous section.
- Step 2. Determine the minimum pocket depth- See step 2 in the previous section.
- Step 3. Determine the minimum footing depth- The depth of the footing should be sufficiently large to avoid punching shear failure below the pocket due to the weight of the column.
- Step 4. Design of footing longitudinal reinforcement- Spread footings should be designed according to section 6.3 of AASHTO. The top longitudinal bars should be placed outside the pocket to avoid interference with the precast column. Additional longitudinal reinforcement should be placed outside the pocket to satisfy shrinkage and temperature reinforcement. The ends of the additional longitudinal bars should be bent and satisfy specification on the standard hooks.
- Step 5. Design of diagonal reinforcement- The area of the diagonal bars should be at least one-third of the required top longitudinal bar area of the footing. The diagonal bars should be placed at 45 degree relative to the longitudinal axis of the footing.
- Step 6. Resistance to overturning- The overturning demand in spread footings should satisfy section 6.3.4 of AASHTO.
- Step 7. Resistance to sliding- The lateral demand due to the plastic overstrength shear of the column should satisfy section 6.3.5 of AASHTO.
- Step 8. Shear design- Shear demand in the spread footings should satisfy sections 6.3.7 and 6.4.7 of AASHTO.
- Step 9. Principal stress checks- Footing to column moment resisting joints should satisfy the requirements of section 6.4.5 of AASHTO.

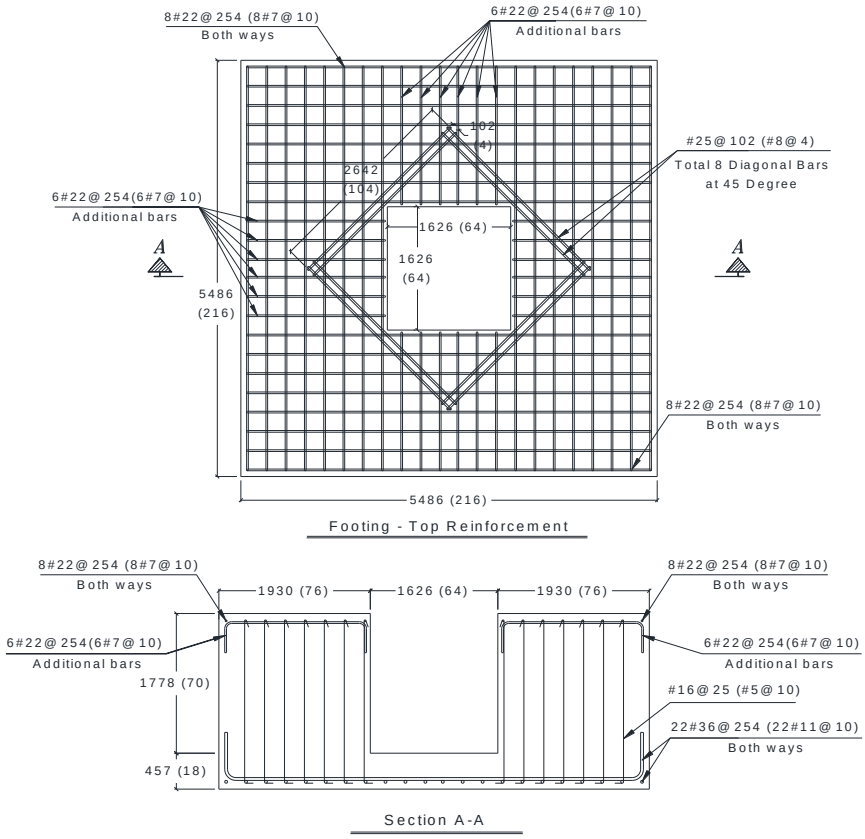

Figure 49. Details of square column-footing pocket connections [units are mm (in)]

Design of Unbonded CFRP Tendons for Post-tensioned Bridge Columns

A step-by-step design procedure for post-tensioned bridge columns using unbonded CFRP tendons was developed and summarized below. Figure 50 shows the cross section of the design example.

- Step 1. Determine the initial post-tensioning stress- Initial posttensioning stress after short and long term losses should be 25% of the guaranteed capacity of the CFRP tendons specified by the manufacturer.
- Step 2. Determine the area of CFRP Tendons- The total area of the CFRP tendons for the initial design should be determined such that the initial posttensioning force is approximately equal to the column axial force due to the dead load. Experimental results have shown that

this level of prestress is sufficient to control residual displacements.

- Step 3. Pushover analysis- Pushover analysis of the post-tensioned column should be performed and the tensile stress in the CFRP tendons should be recorded. Experimental results have revealed that the tensile stress in the tendons increased as the lateral displacement of the column increases due to the elongation of the tendons. Therefore, the area of the CFRP tendons should be adjusted such that the maximum tensile stress in the tendons is less than 80% of the guaranteed capacity of the tendons at the column failure.

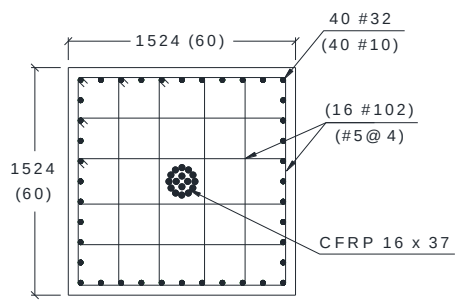

Figure 50. Cross-section of the post-tensioned column using CFRP tendons [units are mm (in)]

Design of Plastic Hinge Zones with UHPC/ECC The experimental results presented in this document showed that UHPC and ECC reduced the plastic hinge damage under strong earthquakes. The height of UHPC/ECC in the column plastic hinge zones is recommended to be determined such that the moment in the column section with conventional concrete is 75% of the plastic moment of the column section with UHPC/ECC. The height of UHPC/ECC should not be less than 1.0 times the column maximum cross-sectional dimension or diameter. Debonding the longitudinal bars in the plastic hinge zones increases the drift capacity of the columns. The debonded length of the longitudinal bars should be determined such that the moment demand at the end of the debonded length in the column is 80% of the column plastic moment.

Task 7 – Summarize the investigation and the results in a draft final report **Pending**

A.5 Expected Results and Specific Deliverables

The results from this study are expected to determine the feasibility and seismic performance of bridge piers incorporating precast, post-tensioned columns with unbonded CFRP tendons and damage-free plastic hinges. The experimental and parametric analytical results will reveal the effects of important parameters and their optimized combination. Specifically, the results are expected to provide information on the following aspects of seismic behavior and design of these types of piers:

a) The appropriate embedment length of precast square columns in pocket connections in cap beams and footings based on column geometric and strength properties.
b) The optimized length of the UHPC segments of columns.
c) The shear performance of UHPC segments.
d) The effectiveness of CFRP tendons and their anchorage.
e) The effectiveness and relative merit of ECC and Ductal in reducing column earthquake damage.
f) Optimized level of PT force based on column geometric and strength characteristics.

The deliverables from this study will consist of:

a) Details of design, construction process, and testing of the pier models.
b) Experimental data on all transducers for different levels of earthquakes.
c) Pretest and post-test analytical procedures and results.

d) Interpretation of the effect of different parameters that will be investigated through the experimental and analytical studies.

e) Practical design procedures and illustrative design examples.

The final project report including details of the study and an executive summary.