1 CFST Connections

Recent research focused on developing a range of CFST column-to-cap beam connections that facilitate ABC and provide superior seismic performance[Lehman and Roeder, 2012b,a; Stephens et al., 2015]. The proposed CFST column-to-cap beam connections are illustrated in Fig. 1. There are three connection types: (1) embedded ring (ER) connections (Fig. 1a), (2) welded dowel (WD) connections (Fig. 1b), and (3) reinforced concrete (RC) connections (Fig. 1c). This provides a suite of connections for designers, each option offering advantages as the bridge may require.

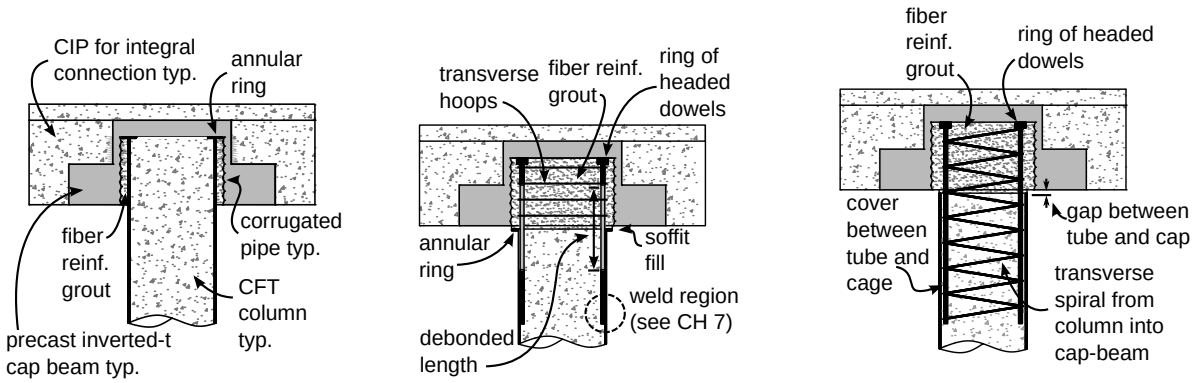

(a) Embedded Ring (ER) Connection

(b) Welded Dowel (WD) Connection

(c) Reinforced Concrete (RC) Connection

Figure 1: Proposed CFST column-to-cap beam connections

The ER connection is similar to the embedded flange column-to-foundation connection that was developed in prior research [Lehman and Roeder, 2012b,a]. It uses a grouted connection detail, with a void cast into a precast cap beam (shown as cast into an inverted-t beam in Fig. 1a; note an RC cap beam can also be utilized). A circular ring is welded to the steel tube to provide anchorage and transfer stress to the concrete and reinforcing in the cap beam. The precast cap beam is placed onto the column after the column is set, and the recess between the tube and corrugated pipe is filled with high strength fiber reinforced grout.

The connections illustrated in Fig. 1b and Fig. 1c utilize T-headed reinforcing dowels that extend from the CFST column into the cap beam to provide axial, moment, and shear transfer. These connections can be used in traditional cast-in-place construction, or can be integrated into precast elements using a void similar to that described from grouted CFST connection as shown in Fig. 1b and Fig. 1c, or individual ducts.

The WD connection utilizes headed dowels to resist the flexural demand. The dowels are welded to the steel to to facilitate transfer of moment from the pier cap to the composite CFST column, and are developed into the cap beam using a high-strength, fiber-reinforced grout. Welding the dowel directly to the tube, as opposed to embedding the dowel directly into the connection maximizes the moment capacity of the dowel connection. A soffit is included between the steel tube and cap beam. A flange is welded to the exterior of the steel tube to increase compressive bearing area on the soffit. The longitudinal bars are de-bonded in the column-to-cap beam interface to reduce damage to the pier cap during inelastic deformation and increase the ductility of the connection, and transverse reinforcing is included in the joint region to provide confinement to the fiber-reinforced grout.

Fig. 1c shows an RC connection in which a short independent cage for both transverse and longitudinal reinforcing extends from the CFST column into the cap beam, and cover is provided between the reinforcing cage and steel tube within the column. A soffit is left between the steel tube and cap beam to help focus the plastic hinging location between the CFST component and the cap beam [Montejo et al., 2009].

2 Design Expressions for CFST Connections

CODE

1.Cap Beam Connections for CFST

1.1 General

CFST column to cap beam connections shall be designed using one of the following options:

1. An embedded Ring An embedded ring (ER) connection in which the CFST column is embedded into the cap beam as illustrated in Figure 1.3.1.
2. A welded dowel (WD) connection in which a ring of reinforcing bars are welded inside the CFST column and extend into the cap beam as illustrated in Figure 1.4.1.
3. A reinforced concrete (RC) connection in which a ring of headed reinforcing bars is developed into the steel tube and extend into the cap beam as illustrated in Figure 1.5.1.

Each of these options can be employed using cast-in-place or precast super-structure components. Embedded ring connections shall be embedded into the reinforced concrete cap beam with an embedment depth and cap beam depth specified in Article 1.4. Welded dowel connections shall include reinforcing welded into the steel tube and extending into the cap beam and CFST column according to Article 1.5. Reinforced concrete connections shall include transverse and longitudinal reinforcing extending from the CFST column into the cap beam according to Article 1.6. Cap beam design for the embedded CFST connection shall conform to requirements in Article 1.3.3, while cap beam design for the welded dowel and embedded dowel connections shall conform to joint shear requirements in Section 7.4 of the Caltrans SDC V. 1.7 unless otherwise specified in the following sections.

1.1.1 Limits of Application

None of these connections shall be used in bridges with skew greater than 20 degrees.

1.2 Materials

Materials for the specified connections shall conform to the Caltrans standards, with several spe-

COMMENTARY

C1. Cap Beam Connections for CFST

C1.1 General

The CFST column to cap beam connections presented in Articles 1.4, 1.5, and 1.6 have been researched extensively [Lehman and Roeder, 2012a; Stephens et al., 2015], and range in performance in terms of stiffness and strength. All of the connections can be implemented using cast-in-place or precast super-structure elements.

For precast construction, a void must be included in the precast elements through use of a corrugated pipe which meets the specifications in Article 1.2.3. The connections are to be grouted into place using fiber-reinforced grout which is designed according to Articles 1.2.1 and 1.2.2.

The three different connection types provide differing strengths and stiffness. The embedded ring connection is a full strength connection in which the strength is controlled by the capacity of the CFST column. The welded dowel connection can be designed as a full or partial strength connection depending on the longitudinal reinforcing ratio in the connection region. The reinforced concrete connection is a partial strength connection which cannot achieve the plastic moment capacity of the CFST without exceeding a longitudinal reinforcing ratio in the connection region of 4%.

C1.1.1 Limitations of Application

To date, no experimental testing has been conducted to evaluate the performance of these connections on bridges with a skew greater than 20 degrees.

cific provisions included in Section 1.2 of this document.

1.2.1 Grout

The fiber-reinforced grout shall consist of prepackaged, cementitious grout which meets ASTM C-1107 for grades A, B, and C non-shrink grout. The grout shall conform to several additional performance requirements including compressive strength, compatibility, constructability, and durability. These requirements are summarized in Table 1.1.1. The 28-day grout strength f'g must exceed f'c of the surrounding concrete components. Grout using metallic formulations shall not be permitted, and grout shall be free of chlorides. No additives shall be added to pre-packaged grout.

Table 1.2.1.1 Grout Specifications

Property	Permitted Values
Mechanical Compressive Strength	Must exceed f'_c of surrounding concrete at 28-days. Minimum grout strength f'_g must exceed 6-ksi.
Compatibility Non-Shrink	Grade A, B, or C per ASTM C-1107
Constructability Flow	Mix to flowable consistency according to manufacturer specifications.
Durability Freeze thaw Sulfate resistance	 300 cycles, relative durability factor 90% per ASTM C666 Expansion at 26 weeks $< 0.3\%$ per ASTM C1012

C1.2.1 Grout

Provisions in 1.2.1 have been included to ensure the grout has properties that provide adequate strength, are conducive to longevity, and provide constructability such that the grout can be placed efficiently for ABC. These requirements are based loosely on recommendations provided in NCHRP Report 681 [Restrepo et al., 2011]. Grouts with chloride are not permitted as these materials can accelerate corrosion in the connection reinforcing and steel tube. Additives are not permitted because pre-packaged grouts are proprietary mixes which should not be modified.

1.2.2 Fiber Reinforcing

Macro polypropylene fiber shall be included with a minimum volume of 0.2%, and shall be mixed according to manufacturer specification.

C1.2.2 Fiber Reinforcing

Macro polypropylene fiber (not micro) reinforcing is included to provide crack resistance and bounding characteristics between the tube and corrugated metal duct. Test results to date have not evaluated the use of alternative fibers including steel fibers.

1.2.3 Corrugated Metal Duct

Corrugated metal ducts are used to provide voids in precast components. The ducts shall be galvanized steel according to ASTM A653. Duct diameter shall be selected based on construction tolerances. Plastic ducts are not permitted.

C1.2.3 Corrugated Metal Duct

The use of corrugated metal ducts for grouted connections has been researched extensively. These ducts provide mechanical interlock between the cap beam concrete and grout, and provide confinement in the joint region. Research on the behavior of the connections using plastic ducts is limited, and therefore their use is currently not permitted.

1.2.4 Reinforcing

Column reinforcing dowels in the WD connection shall conform to ASTM A706 Gr. 60 (or Gr. 80 if

C1.2.4 Reinforcing

ASTM A706 places restrictions on the chemical composition of reinforcing bars to enhance welding prop-

allowed) requirements for weldable reinforcing.

1.2.5 Tube Steel

Steel tubes may either be straight seam or spiral welded and must conform to either ASTM or API requirements. Spiral welded tubes must be welded using a double submerged arc welding process, and weld metal properties must match properties of the base metal and meet minimum toughness requirements of AISC demand critical welds [AISC, 2011].

erties. Welding requirements are discussed in Article 1.4.3.

C1.2.5 Tube Steel

Selection of tube material designation (ASTM or API) plays a role in the ductility of the full strength embedded CFST connection. API grade steels tend to be of higher quality than ASTM grade steels, and can therefore provide additional ductility for both spiral welded and straight seam tubes. Experiments were conducted on API and ASTM tubes which slightly exceeded the upper bound slenderness requirements for CFSTS specified in the AISC Steel Construction Manual (2010). Results from these tests showed that embedded CFST connections which utilize API steel can exceed 8% drift prior to tube fracture, while connections which use ASTM grade steels tend to fracture at 6% drift. Additional ductility can be expected for tubes with lower slenderness values [Lehman and Roeder, 2012b,a; Stephens et al., 2015].

1.3 Embedded Ring Connection

The embedded ring CFST connection shall be design according to the requirements specified in Article 1.3

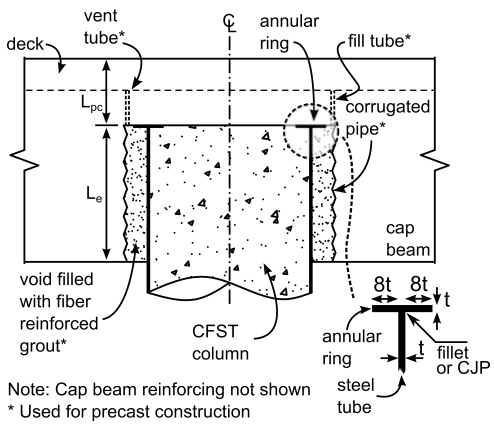

Figure 1.3.1 Embedded Ring Connection

C1.3 Embedded Ring Connection

The embedded ring connection utilizes a CFST fully embedded into the cap beam. The strength and ductility of this connection type is to be controlled by the CFST component, not by the cap beam or other superstructure components. For practical construction, the precast cap would be placed onto the column after the column was set, and the recess between the tube and corrugated pipe would be filled with high strength fiber reinforced grout.

1.3.1 Annular Ring

An annular ring shall be welded to the steel tube as illustrated in Figure 1.3.1. The annular ring shall have the same thickness of the steel tube with a yield stress equal to or greater than that of the steel tube. The ring shall extend outside the tube 8 times the thickness of the tube, and project inside the steel tube 8 times the thickness of the tube as illustrated in Figure 1.3.1.

C1.3.1 Annular Ring

The annular ring is welded to the steel tube to provide anchorage and transfer stress to the concrete and reinforcing in the cap beam. This ring is welded according to Article 1.3.1 to ensure the weld can develop the full tensile capacity of the steel tube.

The annular ring shall be welded to the steel tube using complete joint penetration (CJP) welds of matching filler metal, or fillet welds on both the inside and outside of the tube. The minimum size, w, of the fillets shall be determined using Equation 1.3.1.1 where F_{EXX} and F_u,tube are the minimum tensile strength of the weld metal and steel tube in ksi or psi respectively.

$$w \geq \frac{1.31 F_{u,st} t}{F_{EXX}} \qquad \text{Equation 1.3.1.1}$$

Welds shall provide a minimum CVN toughness of 40-ft-lbs at 70 degrees F.

C1.3.2 Embedment Depth

The tube shall be embedded into the cap beam a distance L_e as defined by Equations 1.3.1.1a or 1.3.1.1b where $f'_{c,cap}$ is the compressive strength of the cap beam in psi, D is the outside diameter of the steel tube, F_u is the minimum specified tensile strength of the steel tube in psi, and F_y, st is the yield strength of the steel tube. Equation 1.3.1.1a shall be used in cases where capacity protected elements are required to develop the plastic capacity of the CFST component, while Equation 1.3.1.1b shall be used when only the yield strength of the CFST element is to be transferred.

$$L_e = \sqrt{\frac{D^2}{4} + \frac{DtF_u}{6\sqrt{f'_{c,cap}}}} - \frac{D}{2} \ (f'_{c,cap} \text{ in psi}) \qquad \text{Equation 1.3.1.2a}$$

$$L_e = \sqrt{\frac{D^2}{4} + \frac{DtF_y}{8\sqrt{f'_{c,cap}}}} - \frac{D}{2} \ (f'_{c,cap} \text{ in psi}) \qquad \text{Equation 1.3.1.2b}$$

C1.3.2 Embedment Depth

The embedment requirements in Article 1.3.2 is required to develop the plastic or yield capacity of the CFST member in flexure prior to developing a conical pullout failure of the connection as illustrated in Figure C1.3.2.1. The cone depth and maximum concrete principal stress limits were derived using results from an extensive experimental program [Lehman and Roeder, 2012b,a; Stephens et al., 2015].

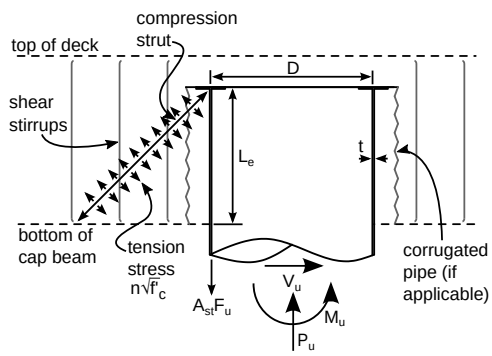

Figure C1.3.2.1 Transfer Mechanism

1.3.3 Requirements for Bridge Layout and Cap Beam Design

1.3.3.1 Bridge Layout

When using the embedded connection, the column shall be laid out between the longitudinal girders as illustrated in Figure 1.3.3.1 and Figure 1.3.3.2.

C1.3.3.1 Bridge Layout

The column must be placed between the longitudinal girders to facilitate the development of corbel reinforcing in the cap beam as well as positive moment continuity in the girders.

1.3.3.2 Required Cap Depth Above CFST Embedment

A minimum cap beam depth above the embedded CFST, L_{pc}, shall be included according to Equa-

C1.3.3.2 Required Cap Depth Above CFST Embedment

Adequate concrete depth must be provided above the tube to eliminate the potential for punching

tion 1.3.3.2.1 where C_c and C_s are the compressive forces (in lbs) in the concrete and steel due to the combined axial load and bending moment as computed using a plastic stress distribution method and $f'_{c,cap}$ is the compressive strength of the cap beam in psi.

$L_{pc} = \sqrt{\frac{D^2}{4} + \frac{C_c+C_s}{6\sqrt{f'_{c,cap}}}} - \frac{D}{2} - L_e$ ($f'_{c,cap}$ in psi) Equation 1.3.3.2.1

1.3.3.3 Cap Beam Reinforcing

(A) Flexural Reinforcing

Longitudinal flexural reinforcing in the column region shall be designed to resist $1.25M_p$ of the CFST column per requirements in the Caltrans SDC. Longitudinal flexural reinforcing shall be spaced uniformly across the width of the cap beam. A minimum of one layer of reinforcing shall pass above the embedded CFST in the cap beam as shown in Figure 1.3.3.3.3. Some longitudinal reinforcing in the bottom layer will be interrupted by the embedded corrugated pipe. The bottom layer of flexural reinforcing not interrupted by the corrugate pipe shall be designed to resist $1.25M_p$ of the CFST column. Interrupted bars shall still be included and arranged as illustrated in Figure 1.3.3.3.

(B) Vertical Stirrups

Vertical reinforcing, A_s^{jv}, shall be included according to Equation 1.3.3.3.1 where $A_s t$ is the total area of the steel tube embedded into the cap beam.

$A_s^{jv} = 0.65A_{st}$ Equation 1.3.3.3.1

Vertical stirrups or ties shall be distributed uniformly within a distance $D/2 + L_e$ extending from the column centerline as shown in Figure 1.3.3.3.1 and Figure 1.3.3.3.3. These stirrups can be used to meet other requirements documented elsewhere including shear in the bent cap.

shear failure in the cap beam. The ACI 318 [ACI, 2011] provisions for flat slabs in single shear were used as a basis to develop an expression for the minimum cap beam depth above the embedded CFST, L_{pc}, to avoid this failure mode. C_c+C_s values have been plotted in Fig. C1.3.3.2.1 for common D/t ratios and f'_c and $F_{y,st}$ values of 6-ksi and 50-ksi respectively.

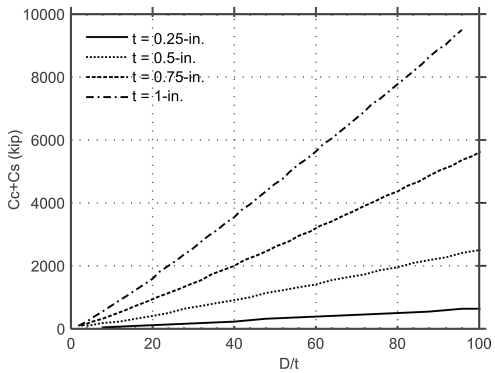

Figure C1.3.3.2.1 $C_c + C_s$ Values Calculated using the PSDM for f'_c=6-ksi and $F_{y,st}$=50-ksi

(B) Vertical Stirrups

Vertical reinforcing is included a distance extending $D/2+L_e$ from the column centerline to resist development of a conical pullout failure as discussed in Article C1.3.2. The vertical reinforcing is included to resist $4\sqrt{f'_c}$ of the maximum principal stress illustrated in Figure C1.3.3. The remaining $2\sqrt{f'_c}$ is carried by the concrete.

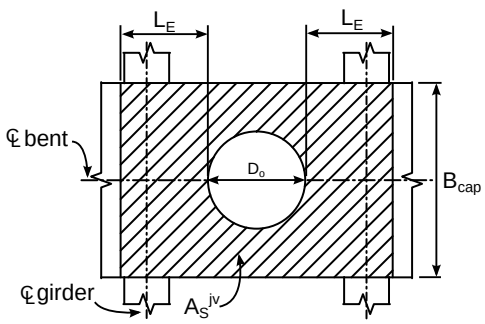

Figure 1.3.3.3.1 Location of Vertical Reinforcing

(C) Horizontal Stirrups

Horizontal stirrups or ties shall be placed transversely around the vertical stirrups or ties in two or more intermediate layers spaced vertically at not more than 18-in apart. The horizontal reinforcing area, A_s^{jh}, shall be included according to Equation 1.3.3.3.2 where Ast is the area of the steel tube embedded into the cap beam. The horizontal reinforcing shall be placed within a distance $D/2 + L_e$ extending from the column

$$A_s^{jh} = 0.1A_{st} \qquad \text{Equation 1.3.3.3.2}$$

In addition, the top layer of transverse reinforcing shall continue across top of the void in the cap beam as illustrated in Figure 1.3.3.3.3.

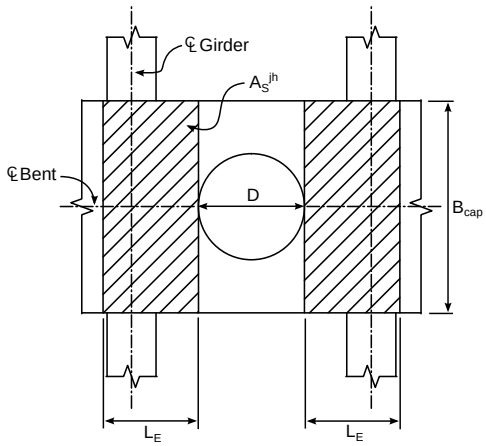

Figure 1.3.3.3.2 Location of Horizontal Reinforcing

(C) Horizontal Stirrups

Horizontal reinforcing requirements are consistent with requirements in Article 7.4.4.3 of the Caltrans SDC V. 1.7 with the exception that the horizontal stirrups must be placed within a distance $D_c/2+L_e$ extending from the column centerline.

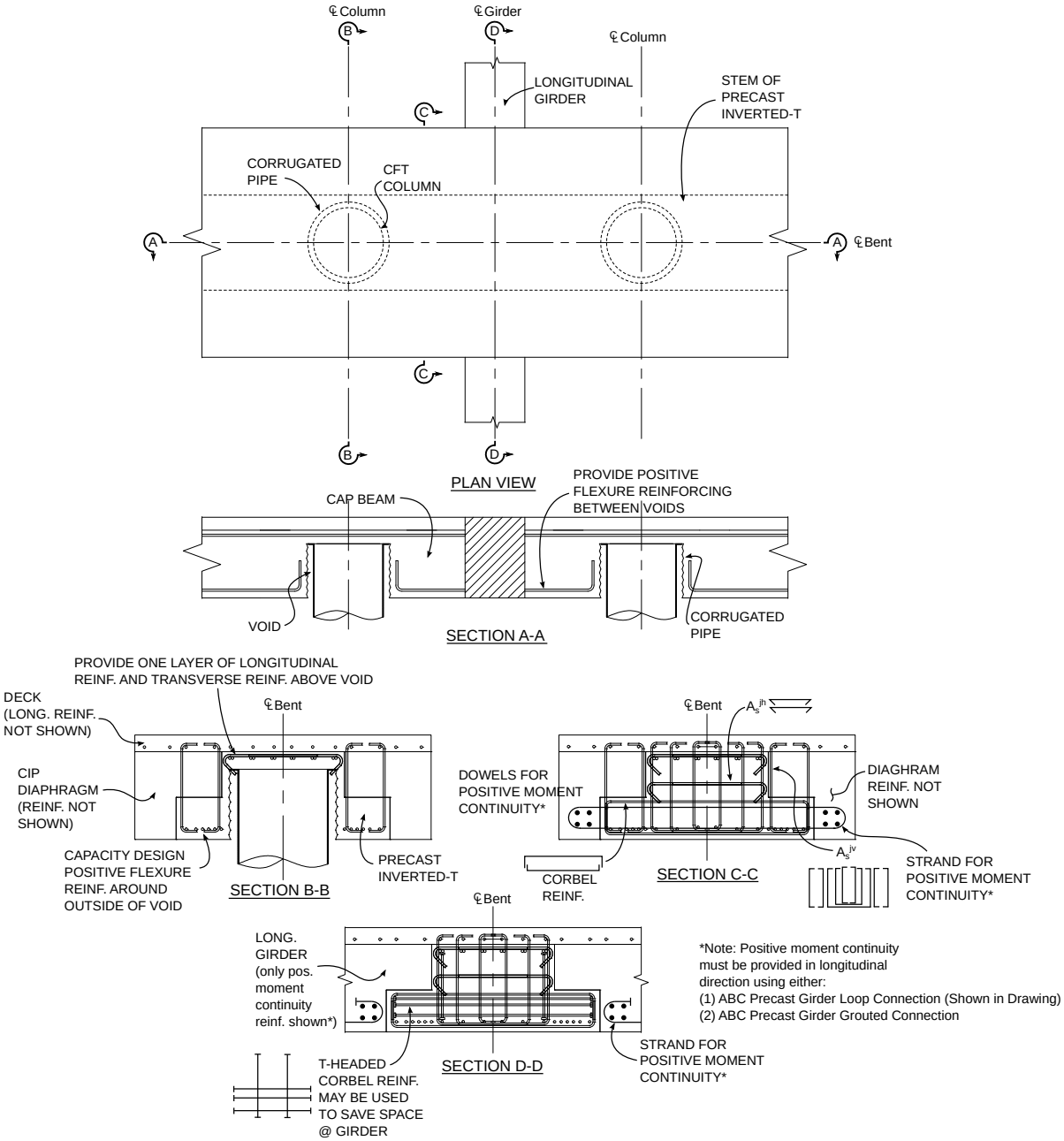

Figure 1.3.3.3 Sample Cap Beam Details for ER Connection

1.3.4 Construction Sequence

The embedded ring connection shall be constructed according to the sequence defined in Article 1.3.4 and illustrated in Figure 1.3.4.1C.

1. Cast foundation leaving a void for the steel tube using a corrugated pipe.
2. Place the steel pipe with annular rings welded to the top and bottom.
3. Grout the steel tube into the foundation using fiber-reinforced grout.
4. Cast concrete fill.
5. For precast construction, place precast element on top of the CFST. For CIP construction, build false work and cast cap beam around the CFST.
6. For precast construction, grout the steel tube into the cap beam using fiber-reinforced grout.

C1.3.4 Construction Sequence

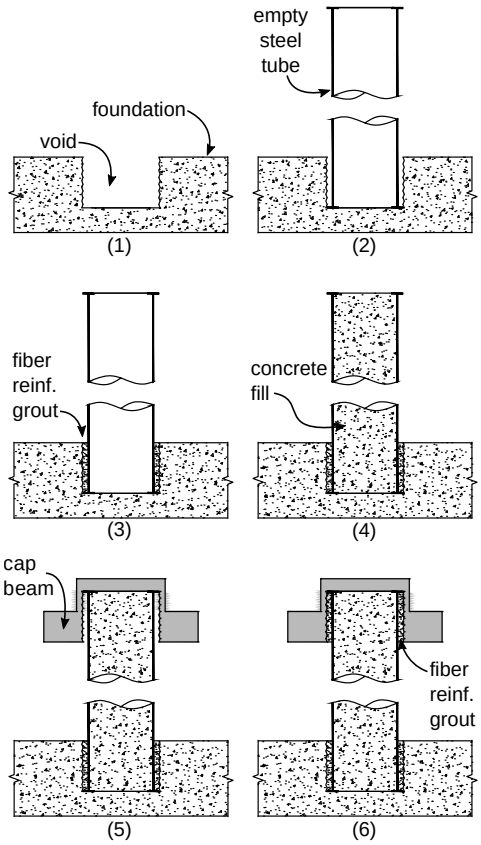

Figure 1.3.4.1C Construction Sequence for Embedded Ring Connection

1.4 Debonded Welded Dowel Connection

De-bonded welded dowel connections shall be designed according to requirements in Section 1.4.

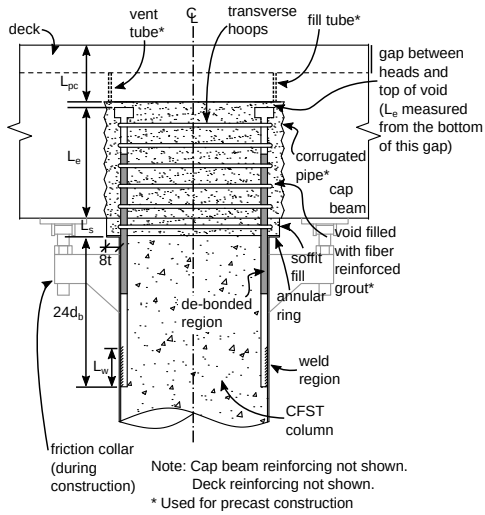

Figure 1.4.1 Welded Dowel Connection with Debonded Dowels

C1.4 Debonded Welded Dowel Connection

The debonded welded bar connection utilizes a ring of headed reinforcing bars which are welded into the tube and developed into the cap beam. The strength and ductility of this connection type is controlled by the reinforcing ratio of the longitudinal reinforcing which extends from the column into the cap beam. The welded detail is primarily intended to decrease the development length and utilize the maximum moment arm within the CFST column.

1.4.1 Flange

A flange shall be welded to the steel tube as illustrated in Figure 1.4.1. The annular ring shall have the same thickness of the steel tube with a yield stress equal to or greater than that of the steel tube. The ring shall extend outside the tube 8 times the thickness of the tube as illustrated in Figure 1.4.1. The annular ring shall be welded to the steel tube using a fillet weld on the outside of the tube. The fillet weld shall be the largest allowable based on the tube thickness as specified in AISC [2011]. Welds shall provide a minimum CVN toughness of 40-ft-lbs at 70 degrees F.

C1.4.1 Flange

The annular ring is welded to the steel tube to provide a larger area to transfer compressive stress from the steel tube to the cap beam. This helps limit localized grout crushing. The fillet weld is designed to transfer to compressive stress from the tube into the annular ring.

1.4.2 Dowel Embedment into CFST and Cap Beam

1.4.2.1 Dowel Embedment into Cap Beam

Longitudinal column dowels shall extend into a void in the cap beam. The embedment length shall be the maximum length calculated using Equation 1.4.2.1.1 where ψ_e is the reinforcing bar coating factor defined in ACI 318 (1.0 for uncoated bars, and 1.2 for epoxy coated bars), L_{db} is the debonded length of the reinforcing bar as defined in Article 1.4.4.2, f'_c,cap is the compressive strength of the cap beam in psi, and $f_{y,b}$ is the yield capacity of the longitudinal dowel in psi.

C1.4.2.1 Dowel Embedment into Cap Beam

The headed reinforcing must extend into the cap beam for a length sufficient to fully develop the reinforcing bar while eliminating the potential for a conical pullout failure as illustrated in Figure C1.4.2.1.1. Equation 1.4.2.1.1a defines the required development length as specified in Article 12.6 of ACI 318 [ACI, 2011], while Equation 1.4.2.1.1b defines the required embedment depth to eliminate conical pullout failure as determined using the transfer mechanism shown in Figure C1.4.2.1.1. The em-

$L_e \geq \frac{0.016*\psi*F_{y,b}}{\sqrt{f'_g}}$ (f'_g in psi) Equation 1.4.2.1a

$L_e \geq \sqrt{\frac{D^2}{4} + \frac{1.2F_{y,b}A_{st,b}}{6\pi\sqrt{f'_{c,cap}}}} - D/2$ ($f'_{c,cap}$ in psi) Equation 1.4.2.1b

$L_e \geq 3d_b + 0.5L_{db}$ Equation 1.4.2.1c

bedment depth requirement in Equation 1.4.2.1c has been included to ensure a minimum bonded length of $3d_b$ is included adjacent to the head on the end of the headed dowel as illustrated in Figure 1.4.1. This region of bonded reinforcing must be included to ensure adequate anchorage of the longitudinal reinforcing into the cap beam.

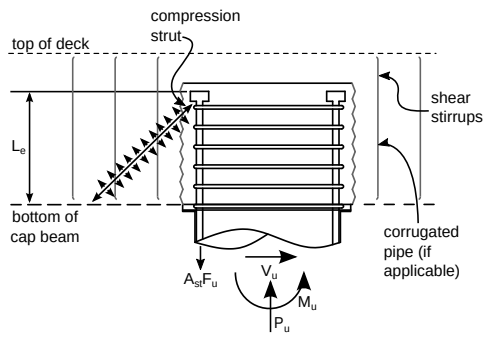

Figure C1.4.2.1.1 Dowel Transfer Mechanism

1.4.2.2 Dowel Embedment into CFST Column

Longitudinal reinforcing shall extend a distance $24d_b$ into the CFST column.

C1.4.2.2 Dowel Embedment into CFST Column

The required reinforcing embedment into the CFST column specified in Article 1.4.2.2 is based on research conducted on the pullout strength of reinforcing welded into CFSTs. Results suggest that the embedment can be decreased to as low as $16d_b$, however $24d_b$ is required to provide a reasonable factor of safety.

1.4.3 Dowel-to-Steel Tube Welds

Reinforcing bars shall be welded to the inside of the steel tube using flare bevel groove welds on both sides of the reinforcing bars as shown in Figure C1.4.3.1. The minimum length of the welds, L_w, shall be the maximum length calculated using Equation 1.4.3.1. All material strengths ($F_{y,bar}$ and F_{EXX}) are in ksi.

$L_w = \frac{5.6A_bF_{y,b}}{F_{EXX}d_b}$ Equation 1.4.3.1a

$L_w = \frac{0.83A_bF_{y,b}}{F_{y,st}t}$ Equation 1.4.3.1b

$L_w = \frac{1.11A_bF_{y,b}}{F_{u,st}t}$ Equation 1.4.3.1c

C1.4.3 Dowel-to-Steel Tube Welds

The weld lengths specified in Article 1.4.3 are calculated to develop the yield capacity of the reinforcing bars based on typical weld limit states for flare bevel groove welds. These equations are based on welding requirements for reinforcing bars specified in AWS 1.4, which defines the effective throat width to be $0.2d_b$ as illustrated in Figure C1.4.3.1. Equation 1.4.3.1a is based on failure of the weld metal, Equation 1.4.3.1b is based on yielding of the tube steel, and Equation 1.4.3.1c is based on rupture of the tube steel. Strength reduction factors specified according to the AISC Construction Manual have been included in Equation 1.4.3.1.

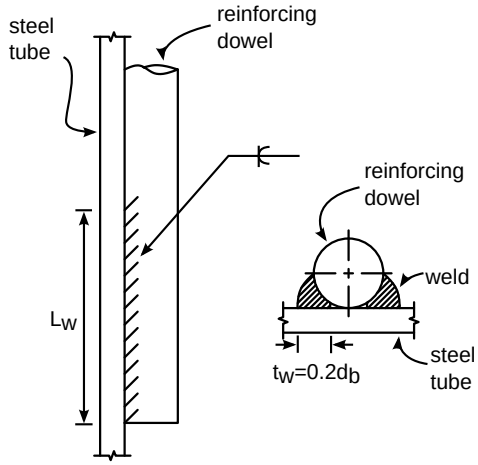

Figure C1.4.3.1 Flare Bevel Groove Weld

1.4.4 Debonded Dowels

Longitudinal column dowels shall be de-bonded from the surrounding concrete in the connection region according to the requirements in Section 1.4.4. The de-bonded region is denoted as L_{db} in Figure 1.4.4.1.

C1.4.4 Debonded Dowels

Longitudinal reinforcing is de-bonded in the connection region with the intention of evenly distributing strain across the de-bonded length, thereby increasing the ductility of the connection.

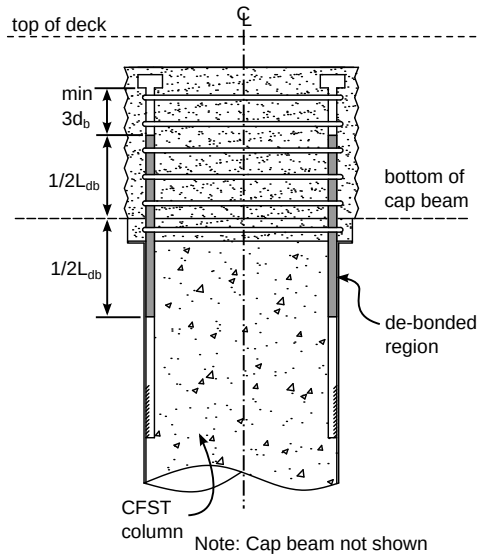

Figure 1.4.4.1 WD Debonding Details

1.4.4.1 Debonding Methods

The Engineer shall specify the de-bonding method on project plans on a project by project basis.

C1.4.4.1 Debonding Methods

Several de-bonding methods have been evaluated in previous research including encasing the bars in tight-fitting PVC pipe, or wrapping the bars with duct tape. Other methods may be considered so long as it has been shown that they adequately de-bond the reinforcing from the surrounding concrete.

1.4.4.1 Debonded Length

Longitudinal reinforcing shall be de-bonded from

the surrounding concrete in the connection region as illustrated in Figure 1.4.4.1. The de-bonded length, L_{db}, shall be calculated according to Equation 1.4.4.2.1 or Equation 1.4.4.2.2 where θ is the target rotation for reinforcing bar fracture, and ϕ_s is the curvature of the connection at a steel strain limit of $0.7\epsilon_u$ as obtained from a moment curvature analysis. Half of the de-bonded length shall extend into the cap beam, and half of the de-bonded length shall extend through the soffit fill and into the CFST column as illustrated in Figure 1.4.1.

$$L_{db} = \frac{tan\theta(D-t-d_b/2)}{0.7\epsilon_u} \qquad \text{Equation 1.4.4.2.1}$$

$$L_{db} = \frac{\theta_u}{\phi_u} \qquad \text{Equation 1.4.4.2.2}$$

1.4.5 Transverse Column Reinforcing in Joint Region

Transverse reinforcing shall be included in the joint region in the form of spiral or discrete hoops as shown in Figure 1.4.1. The area and spacing of this reinforcing must conform to Equation 1.4.5.1. When discreet hoops are used, at least one hoop must be placed in the depth of the soffit fill.

1.4.6 Requirements for Bridge Layout and Cap Beam Design

1.4.6.1 Bridge Layout

The column shall be laid out between the longitudinal girders.

1.4.6.2 Cap Beam Reinforcing

(A) Flexural Reinforcing

Longitudinal flexural reinforcing shall be designed to resist $1.2M_p$ of the CFST column per requirements in the Caltrans SDC V. 1.7 [Caltrans, 2010]. Longitudinal flexural reinforcing shall be spaced uniformly across the width of the cap beam. Some longitudinal reinforcing in the bottom layer will be interrupted by the embedded corrugated pipe. The bottom layer of flexural reinforcing not interrupted by the corrugate pipe shall be designed to resist 1.2Mp of the CFST column. Interrupted bars shall still be included as shown in Figure 1.3.3.

(B) Vertical Stirrups

Vertical stirrups shall be included according to requirements in Article 7.4.4.2 in the Caltrans SDC [Caltrans, 2010].

C1.4.5 Transverse Column Reinforcing in Joint Region

Transverse reinforcing is placed around the reinforcing bars to increase confinement in the joint region especially through the depth of the soffit fill.

(C) Horizontal Stirrups

Horizontal stirrups shall be included according to requirements in Article 7.4.4.2 in the Caltrans SDC [Caltrans, 2010].

1.4.6.3 Soffit Fill Depth

The soffit fill depth, L_s, shall be calculated according to Equation 1.4.6.1.1.

$$L_s \geq sin\left(\theta_u\right)\left(\frac{D}{2} + 8t\right) \qquad \text{Equation 1.4.6.3.1}$$

C1.4.6.3 Soffit Fill Depth

The soffit fill depth requirement in Equation 1.4.6.1.1 ensures that the annular ring does not come into contact with the cap beam at the maximum expected drift, θ.

1.4.6.4 Requirements for Headed Reinforcing

Minimum cover shall be provided when headed reinforcing is anchored in the cap beam according to requirements in Article 1.4.6.4. These requirements are summarized in Figure 1.4.6.4.1.

1. The thickness of side cover around the head must be equal to or greater than the diameter of the head.

2. A minimum depth of $3d_h$ shall be included above the heads in the headed reinforcing where d_h is the diameter of the head.

3. Nominal amounts of longitudinal reinforcing (e.g. reinforcing steel in the plane orthogonal to the headed reinforcement) shall be placed above the head.

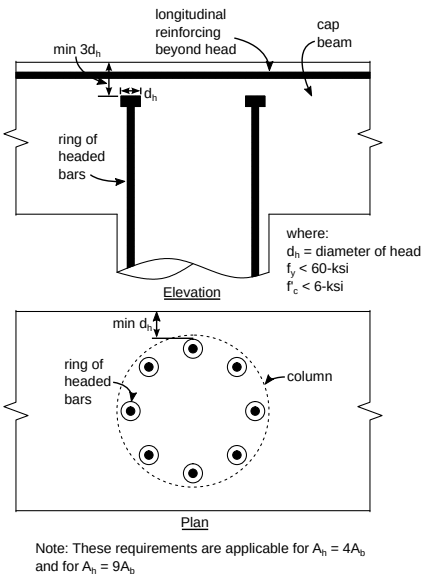

Figure 1.4.6.4.1 Cover Requirements for Headed Reinforcing

C1.4.6.4 Requirements for Headed Reinforcing

Unlike straight bar anchorage conditions, for which the deformations along the length of the bar provide progressive anchorage, in a headed bar the head itself provides most of the anchorage. Under tensile loading the head reacts and transfers the force through strutting action, as shown in Figure 1. Under compression, the headed bar transfers the force to the concrete through strutting action towards the base. In both conditions, four aspects of dimensioning are important: (1) sufficient concrete depth to limit the shear stresses along the compression strut, (2) sufficient cover, (3) horizontal (longitudinal) reinforcement to resist the horizontal component of the strut and (4) vertical (transverse) reinforcement to resist the vertical component of the strut.

1.4.7 Construction Sequence

The welded dowel connection shall be constructed according to the sequence defined in Article 1.4.7 and illustrated in Figure 1.4.7.1C.

1. Cast foundation leaving a void for the steel tube using a corrugated pipe.
2. Place the steel pipe with annular ring welded to the bottom and longitudinal reinforcing and annular ring welded to the top.
3. Grout the steel tube into the foundation using fiber-reinforced grout.
4. Cast concrete fill.
5. For precast construction, place precast element on top of the CFST with a friction collar. The headed reinforcing should not come into contact with the top of the void in the cap beam. For CIP construction, build false work and cast cap beam around the CFST.
6. For precast construction, grout the welded reinforcing into the void in the cap beam.

C1.4.7 Construction Sequence

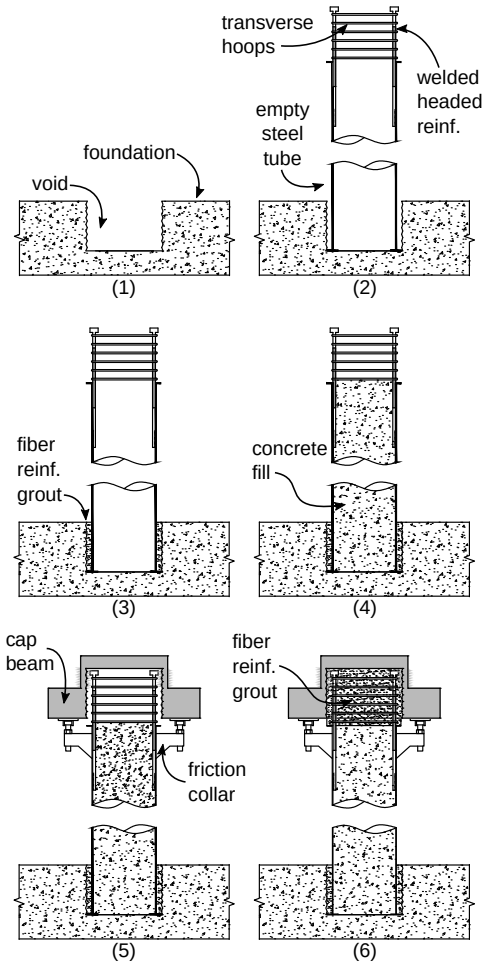

Figure 1.4.7.1C Construction Sequence for Welded Dowel Connection

1.5 Reinforced Concrete Connection

Reinforced concrete connections shall be designed according to requirements in Section 1.5.

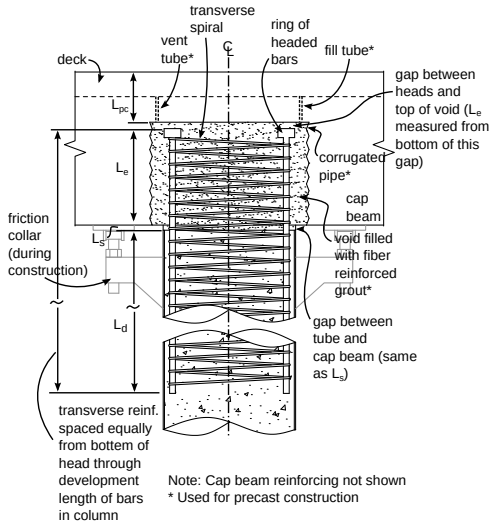

Figure 1.5.1 Reinforced Concrete Connection

1.5 Reinforced Concrete Connection

The reinforced concrete connection consists of a more traditional reinforced concrete dowel connection, as both transverse and longitudinal reinforcing extend from the CFST column into the cap beam. The strength and ductility of this connection type is controlled by the reinforcing ratio and moment arm of the longitudinal reinforcing. Note that construction of this connection using precast super-structure components requires use of a friction collar to temporarily support the cap beam.

1.5.1 Dowel Embedment into Column and Cap Beam

1.5.1.1 Dowel Embedment into Cap Beam

Longitudinal reinforcing shall extend into the cap beam as specified in Article 1.4.2.1.

1.5.1.2 Dowel Embedment into CFST Column

Longitudinal reinforcing shall extend a distance Ld into the CFST column according to Equation 1.5.2.2.1 where ψ_e is the reinforcing bar coating factor as defined in ACI 318 (1.0 for uncoated bars, and 1.2 for epoxy coated bars), $f'_{c,fill}$, is the compressive strength of the concrete fill in psi, and $f_{y,b}$ is the yield strength of the longitudinal dowels in psi.

$$L_d = \left(\frac{F_{y,b}\psi_e}{25\sqrt{f'_{cf}}}\right) d_b \qquad \text{Equation 1.5.1.1.1}$$

C1.5.1.2 Dowel Embedment into CFST Column

The headed reinforcing must extend into the CFST column for a length sufficient to fully develop the reinforcing bar. Equation 1.5.2.21 defines the required development length as specified in Article 12.2 of ACI 318 [ACI, 2011]. Equation 1.5.2.2.1 is a simplified development length equation which pertains to geometries commonly found in reinforced concrete bridge columns. For uncommon geometries or reinforcing layouts, The Engineer shall reference Article 12.2 of ACI 318 [ACI, 2011].

1.5.2 Transverse Reinforcing

Transverse reinforcing in the form of discrete hoops or spiral shall extend from the cap beam and into the column for a distance L_d as illustrated in Figure 1.5.1.

1.5.3 Requirements for Bridge Layout and Cap Beam Design

1.5.3.1 Bridge Layout

The column shall be laid out between the longitudinal girders.

1.5.3.2 Cap Beam Reinforcing

(A) Flexural Reinforcing

Longitudinal flexural reinforcing shall be designed to resist $1.2M_p$ of the CFST column per requirements in the Caltrans SDC V. 1.7 [Caltrans, 2010]. Longitudinal flexural reinforcing shall be spaced uniformly across the width of the cap beam. Some longitudinal reinforcing in the bottom layer will be interrupted by the embedded corrugated pipe. The bottom layer of flexural reinforcing not interrupted by the corrugate pipe shall be designed to resist $1.2M_p$ of the CFST column. Interrupted bars shall still be included as shown in Figure 1.3.3.

(B) Vertical Stirrups

Vertical stirrups shall be included according to requirements in Article 7.4.4.2 in the Caltrans SDC V. 1.7 [Caltrans, 2010].

(C) Horizontal Stirrups

Horizontal stirrups shall be included according to requirements in Article 7.4.4.2 in the Caltrans SDC V. 1.7 [Caltrans, 2010].

1.5.4 Requirements for Headed Reinforcing

Cover for headed reinforcing shall be included according to requirements in Article 1.4.6.2.

1.5.5 Construction Sequence

The reinforced concrete connection shall be constructed according to the sequence defined in Article 1.5.5 and illustrated in Figure 1.5.5.1C.

1. Cast foundation leaving a void for the steel tube using a corrugated pipe.
2. Place the steel pipe with an annular ring welded to the bottom.
3. Grout the steel tube into the foundation using fiber-reinforced grout.
4. Temporarily support longitudinal reinforcing cage at the top of the column, and cast concrete fill.
5. For precast construction, place precast element on top of the CFST using a friction collar. The headed reinforcing should not come into contact with the top of the void in the cap beam. For CIP construction, build false work and cast cap beam around the CFST.

C1.5.5 Construction Sequence

6. For precast construction, grout the longitudinal reinforcing cage into the cap beam using fiber-reinforced grout.

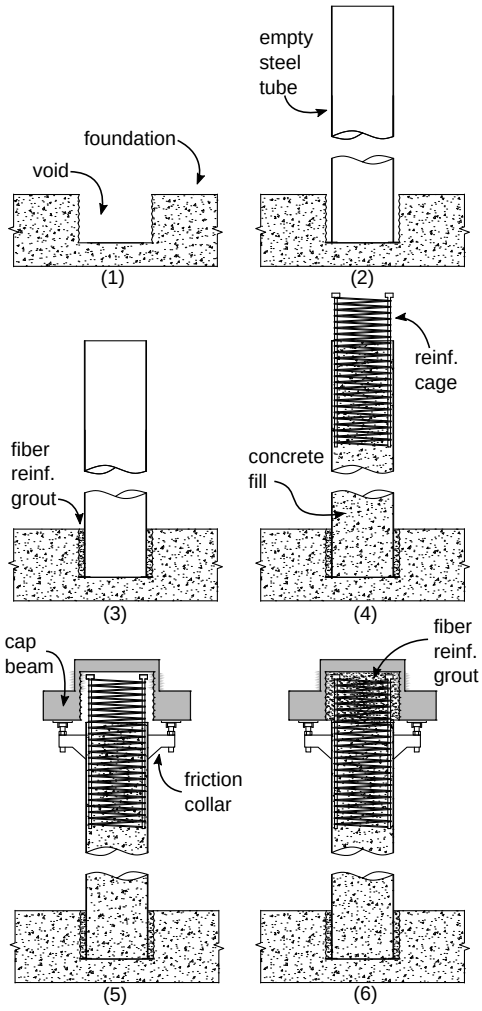

Figure 1.5.5.1C Reinforced Concrete Construction Sequence

3 ER Connection Design Example

A detailed design example is presented here to demonstrate the design of a CFST bridge column and ER connection to facilitate implementation into seismic bridge design practice. The example is a redesign of a conventional reinforced concrete bridge column and cap beam connection using the Laguna De Santa Rosa Bridge (located outside of Santa Rosa, California) as a prototype structure (details illustrated in Fig. 2). The design procedure is broken down into two primary components: (1) Design of the CFST component using recommendations in AASHTOa [2015], and (2) Design of the ER connection and cap beam using the recommendations presented herein. The design procedure is as follows.

Design of CFST Component

The first step was to redesign the RC columns as CFST columns. The columns were designed using the following procedure highlighted in the flow chart in Fig. 3. Note that the material properties used for design of the CFST columns are provided in Table 1.

Table 1: Nominal Material Properties for Design of CFST Columns

f'_c	E_c	$F_{y,st}$	$F_{u,st}$	E_s
6-ksi	4415-ksi	50-ksi	60-ksi	29000-ksi

1. Determine Factored Loads ($P_u, M_u, and V_u$)

The following loads were provided by the California Department of Transportation.

$Service \longrightarrow P_u = 790 - kip, M_u = 1920kip - ft, V_u = 256 - kip$

$ControllingLimitStateLoad \longrightarrow P_u = 1300 - kip, M_u = 5300kip - ft, V_u = 707 - kip$

2. Size Initial CFST Column Based on Service Axial Load Range

The initial section is designed to have an axial load in the range of $0.1P_o - 0.2P_o$ where

$P_o = \pi DtF_{y,st} + 0.95(D^2/4)\pi f'_c$

Using a target $D/t = 90 \longrightarrow t = 90/D$

Solving for D (with an assumed service load of $0.1P_o$):

$10(790/0.75) = 10(1053.33) = \pi D(D/90)50 + 0.95(D^2/4)\pi 6 \longrightarrow D = 41.145$

Try $D = 44 - in., t = 0.5 - in., D/t = 88$

3. Calculate the Stiffness of the CFST Component

The effective stiffness is calculated using Equation 6.9.6.3.2-6 from AASHTOa [2015].

$EI_{eff} = E_sI_{st} + C'E_cI_c$

$\longrightarrow I_{st} = 16726 - in.^4$

$\longrightarrow I_c = 183984 - in.^4$

$\longrightarrow A_{st} = 69 - in.^2$

$\longrightarrow A_c = 1486 - in.^2$

$\longrightarrow C' = 0.15 + P/P_o + A_{st}/(A_{st} + A_c) = 0.15 + 1300/11700 + 68.72/(68.72 + 1486.17) = 0.305$

$EI_{eff} = 29000 \times 16726 + 0.305 \times 4415 \times 183984 = 7.33 \times 10^8 kip - in^2$

4. Calculate the Moment Magnification Factor and Magnify the Moment

$\delta_s = 1/(1 - P_u/(\phi P_e))$

$\longrightarrow P_e = \pi^2 EI_{eff}/(KL)^2 = \pi^2 \times 7.33 \times 10^8/(0.5 \times 15 \times 12)^2 = 893138 - kip)$

$\delta_s = 1/(1 - 1300/(0.9 \times 893138)) = 1$

5. Determine the P_n, M_n, V_n Combinations for Each Load Case

$ServiceLoads \longrightarrow P_n = P_u/\phi = 790/0.75 = 1053 - kip, M_n = M_u/\phi = 1920kip - ft/0.75 = 2560kip - ft, V_n = V_u/\phi = 256/0.9 = 285 - kip$

$ControllingLimitStateLoad(Seismic) \longrightarrow P_n = P_u/\phi = 1300/1.0 = 1300 - kip, M_n = M_u/\phi = 5300kip - ft/1.0 = 5300kip - ft, V_n = V_u/\phi = 707/1.0 = 707 - kip$

6. Compute P-M Interaction Diagram for CFST Component

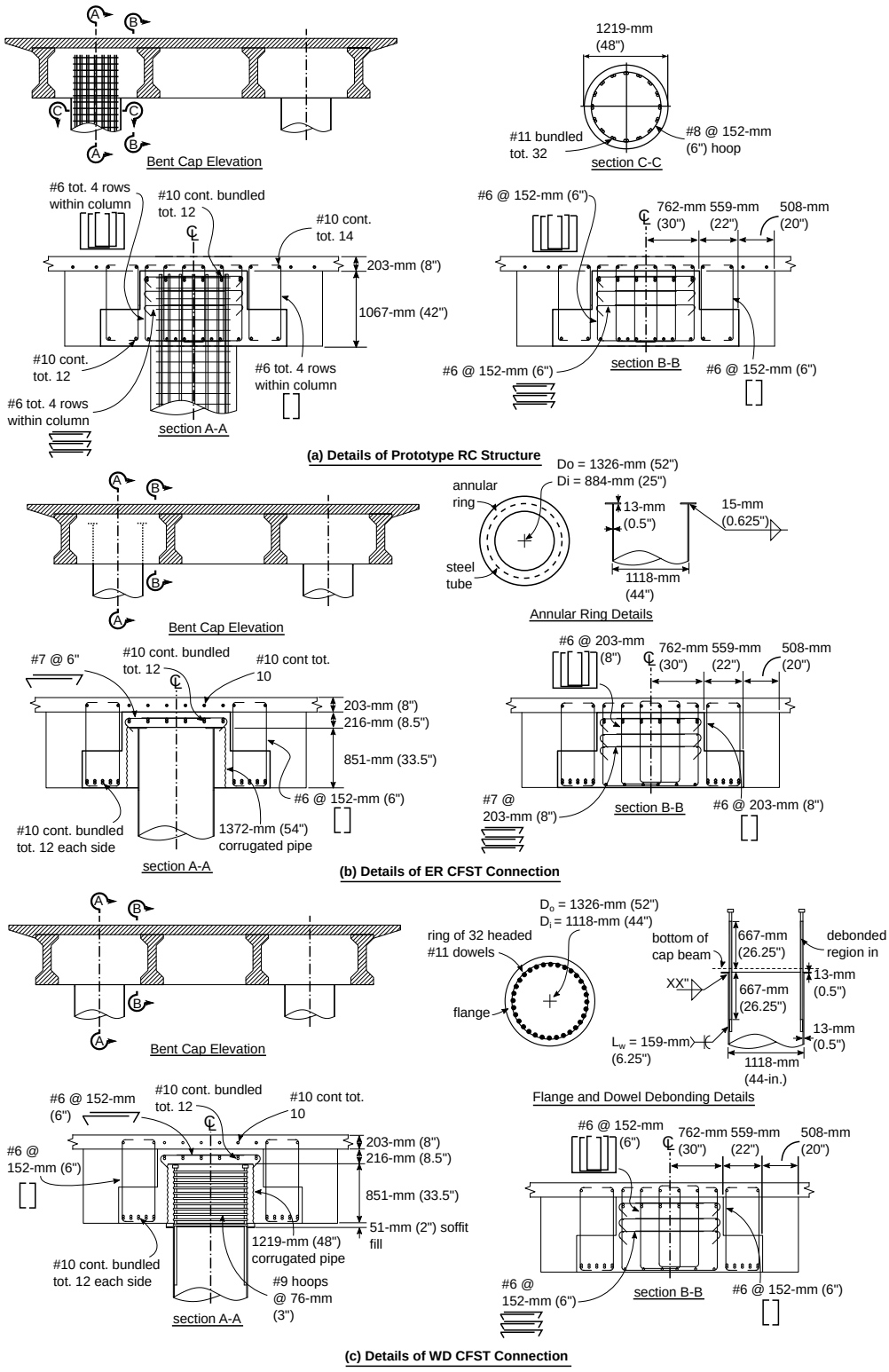

NOTE: Longitudinal deck reinforcing, diaphragm reinforcing, corbel reinforcing, and side reinforcing not shown.

Figure 2: Details of RC Prototype Structure and Redesigned CFST Structure with ER Connection

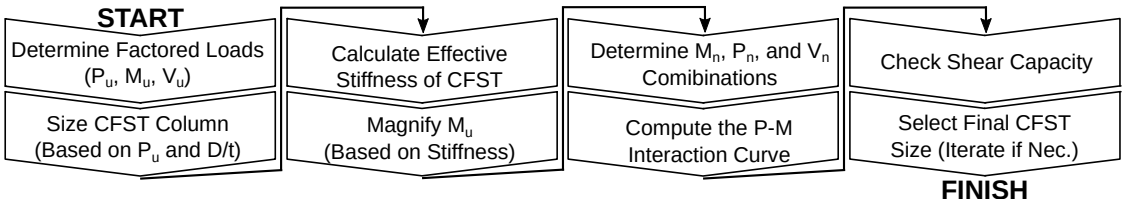

Figure 3: Flow Chart for Design of CFST Component

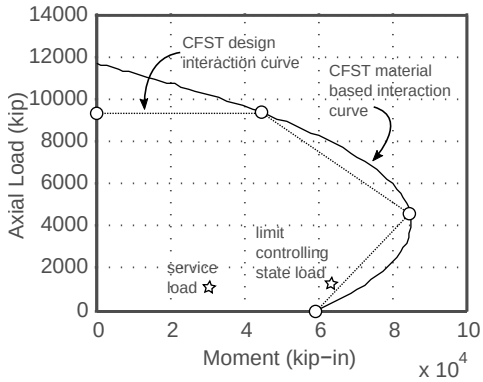

Figure 4: P-M Interaction Curve for CFST Component

The P-M interaction diagram was computed using the procedure specified in AASHTOa [2015]. First, the material based interaction surface was developed using the PSDM (as discussed in AASHTOa [2015]). Then, the influence of geometric nonlinearity was considered to develop the design interaction diagram. The interaction diagram and demands are illustrated in Fig. 4. The CFST component has adequate capacity to sustain the combined loading combination, and the axial loads are in the range of 10% of the crushing load.

7. Calculate the Shear Strength of the CFST Component

The shear strength of the section is computed assuming that only the steel tube contributes to the strength. The following shear strength expression has been adopted from the AISC steel construction manual [AISC, 2011]. The shear capacity of the CFST component is greater than the controlling limit state shear demand.

$V_n = 0.6F_{y,st}A_v$

$\longrightarrow A_v = 0.5A_{st} = 0.5 \times 68.72 = 34.36 - in.^2$

$V_n = 0.6 \times 50 \times 34.36 = 1031 - kip > V_u/\phi = 785 - kip$

8. Select Final Size of CFST Component

Use D=44-in., t=0.5-in., D/t=88

Note that the final diameter of the CFST columns are less than that of the original RC columns, while, stiffness and strength of the CFSTs are greater than that of the original RC sections.

Design of ER Connection

Design of the ER CFST column-to-cap beam connection is demonstrated in this section. The procedure for designing this connection is summarized in the flow chart in Fig. 5. The final design, including reinforcing steel details, is illustrated in Fig. 2. Note that a similar design process is used for an ER moment resisting foundation connection. Note that the purpose of this example is to highlight the design requirements specific to the ER connection. Therefore corbel reinforcing and side reinforcing, which are consistent with requirements in [AASHTOa, 2015], are not included in the example.

1. Size the Annular Ring

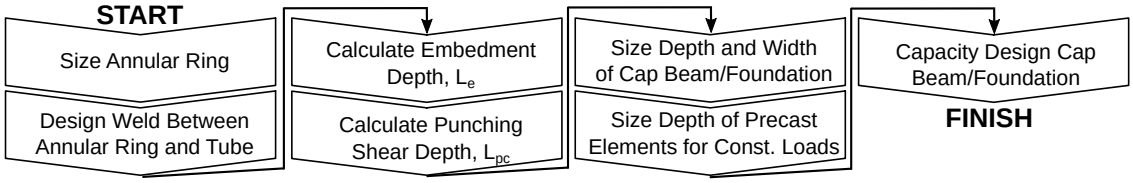

Figure 5: Flow Chart for Design of ER Connection

The annular ring is the same thickness and the same steel properties as the steel tube. The ring projects into and out of the tube for a distance of 8t, where t is the thickness of the steel tube. For the example column, the outer, D_o, and inner, D_i, diameters of the ring are calculated as:

$D_o = D + 16t = 44 + 16 \times 0.5 = 52 - in.$

$D_i = D - st - 16t = 44 - 2 \times 0.5 - 16 \times 13 = 25 - in.$

Use an annular ring with $D_o = 52 - in.$ **and** $D_i = 25 - in.$

2. Design the Weld Between the Annular Ring and Tube

The weld between the steel tube and annular ring is calculated according to the specifications above assuming a weld metal strength of 70-ksi, which is greater than the yield strength of the tube.

$w \geq \frac{1.31F_{u,st}t}{F_{exx}} \geq \frac{1.31\times60\times0.5}{70} = 0.57 - in.$

Use 0.625-in. fillet welds

Note: CJP welds can also be used.

3. Calculate the Required Embedment Depth

Calculate the required tube embedment depth into the cap beam.

$L_e \geq \sqrt{\frac{D^2}{4} + \frac{DtF_u}{6\sqrt{f'_{c,cap}}}} - \frac{D}{2} = \sqrt{\frac{44^2}{4} + \frac{44\times0.5\times60000}{6\sqrt{6000}}} - \frac{44}{2} = 33.5 - in.$

Use $L_e = 33.5 - in.$

4. Calculate the Required Depth Above the Embedded Tube to Eliminate Punching Shear

Calculate the required depth above the embedded tube. The required depth above the embedded tube is calculated for two load cases; first to size the inverted-t, and second to determine the total required depth of the superstructure above the embedded to resist the controlling limit state load.

For the purpose of sizing the inverted-t, the depth above the embedded tube is calculated to resist punching shear failure during construction prior to grouting the connection. This calculation is made according to ACI requirements for punching shear conservatively assuming one-way shear.

Assumed construction dead load = 55-kip based on the as-built drawings of the precast components in the prototype structure.

$\phi V_c = \phi 0.17\sqrt{f'_c}b_o d$

$\longrightarrow b_o = \pi(D_o + d) = \pi(52 + d)$

$\frac{55000}{0.75} = 2\sqrt{6000}\pi(52 + d)d \longrightarrow d = 2.75 - in.$

Next, calculate the total required depth (deck and inverted-t) above the embedded CFST to eliminate the potential for punching shear failure during seismic loading. Note that C_c and C_s are in kips.)

$L_pc = \sqrt{\frac{D^2}{4} + \frac{C_c+C_s}{6\sqrt{f'_{c,cap}}}} - \frac{D}{2} - L_e = \sqrt{\frac{44^2}{4} + \frac{2000000}{6\sqrt{6000}}} - \frac{44}{2} - 33.5 = 13.3 - in. forcontrollingstateload$

5. Size the Initial Depth of the Cap Beam Based on Steps 3 and 4

The inverted-t requires a depth above the tube of 2.75-in. for construction loads, while the total required depth is 11.5-in. for seismic loading. Assuming a deck depth of around 8-in. this allows 3.5-in. of depth above the embedded CFST in the inverted-T beam. Allowing additional space for reinforcing in the cap beam, a depth above the embedded CFST of 8.5-in. is selected.

Use a total depth of $Hcap = Le + Lpc = 42 - in.$ **for the precast inverted-t.**

The width of the stem in the inverted-T beam is selected based on the diameter of the corrugated pipe (assuming modular construction method). The inner diameter of the corrugated pipe must exceed Do (which was calculated in Step 1). Galvanized corrugated pipe with an inner diameter of 54 in. is commercially available. Thus the width of the stem of the inverted-T beam must exceed this diameter with standard cover requirements.

Use a stem width of 60-in.

6. Capacity Design the Cap Beam to Resist $1.25M_p$ *of the CFST Column*

The plastic capacity of the CFST column is $1.25M_{p,CFST} = 85000kip - in.$. A ledge width of 22-in. is assumed based on the dimensions of the prototype bridge. 20 No. 10 bars in the bottom of the inverted-t and 12 No. 10 bars in the top of the inverted-t are initially tried. Additional cap beam reinforcing consisting of 14 No. 10 bars is included in the deck. The primary flexural reinforcing is arranged as shown in Fig. 2. The resulting flexural capacity of the cap beam are calculated as:

$M_n^+ = 7199kip - ft$

$M_n^- = 7133kip - ft$

Use 20 No. 10 bars in the bottom of the inverted-t and 12 No. 10 bars in the top of the inverted-t. Include 14 No. 10 bars in the deck for additional negative moment capacity.

7a. Design Vertical Stirrups in the Joint Region

The required shear reinforcing in the joint region is calculated using the simplified expression $A_s^{jv} = 0.65A_{st}$ in this document. This reinforcing must be evenly distributed in the hatched area described in the specifications. The distribution of vertical shear reinforcing in the final design in this example is illustrated in Fig. 2.

$A_s^{jv} = 0.65A_{st} = 0.65 \times 68.72$

Use 100 No. 6 vertical stirrup legs evenly distributed around the column $\longrightarrow A_s^{jv} = 44 - in^2$

7b. Design Horizontal Stirrups in Joint Region

The required area of horizontal stirrups is consistent with the requirements in the Caltrans SDC. One layer of horizontal stirrups must pass above the embedded CFST as shown in Fig. 2.

$A_s^{jh} = 0.1A_{st} = 0.1 \times 0.1 \times 68.72 = 6.872 - in.^2$

Use 3 rows of No. 7 hooks $\longrightarrow A_s^{jh} = 7.2 - in.^2$

4 WD Connection Design Example

A detailed design example is presented here to demonstrate the design of a CFST bridge column and WD connection to facilitate implementation into seismic bridge design practice. The example is a redesign of a conventional reinforced concrete bridge column and cap beam connection using the Laguna De Santa Rosa Bridge (located outside of Santa Rosa, California) as a prototype structure (details illustrated in Fig. 2). The design procedure is broken down into two primary components: (1) Design of the CFST component and longitudinal dowels in the connection region using recommendations in AASHTOa [2015], and (2) Design of the WD connection and cap beam using the recommendations presented herein. The design procedure is as follows.

Design of CFST Component and Dowels in Connection Region

The first step was to redesign the RC columns as CFST columns. The columns were designed using the procedure highlighted in the ER connection design example above. The final CFST column had $D = 44 - in., t = 0.5 - in., D/t = 88$

1. Design of CFST Dowels in the Connection Region

The dowels in the connection region are designed to resist the applied loads. Based on the service and controlling limit state loads (provided in the previous example) assume 32 No. 11 dowels. Note that the dowel yield and rupture strengths are assumed to be 68-ksi and 98-ksi respectively.

2. Check Crushing Capacity of CFST Connection

Check to ensure that the service axial load is approximately 10% of the crushing load of the WD connection.

$\frac{P_u}{P_o} \leq 0.1$

$\longrightarrow P_u = 790 - kip$

$\longrightarrow P_o = A_{st,b} + F_y + 0.85(D^2/4)\pi f'_c = 49.92 \times 68 + 0.85 \times (43^2/4) \times \pi \times 6 = 10800 - kip$

$\frac{790}{10800} = 0.07 \leq 0.1$ **OK!**

3. Calculate the Effective Stiffness of the WD Connection

$EI_{eff} = 4.09 \times 10^8 kip - in^2$ (from structural analysis program)

4. Calculate the Moment Magnification Factor

$\delta_s = 1/(1 - P_u/(\phi P_e))$

$\longrightarrow P_e = \pi^2 EI_{eff}/(KL)^2 = \pi^2 \times 4.09 \times 10^8/(0.5 \times 15 \times 12)^2 = 498354 - kip)$

$\delta_s = 1/(1 - 1300/(0.9 \times 498354)) = 1$

5. Compute P-M Interaction Diagrams for CFST and WD Connection

Development of the P-M interaction curve for the CFST component is discussed in the previous example. The P-M interaction diagrams for the CFST and WD connection are plotted in Fig. 6. The interaction curve for the WD connection was calculated using Caltrans requirements for RC columns [Caltrans, 2010].

Design WD Connection

Design of the WD CFST column-to-cap beam connection is demonstrated in this section. The procedure for designing this connection is summarized in the flow chart in Fig. 7. The final design, including reinforcing steel details, is illustrated in Fig. 2. Note that the purpose of this example is to highlight the design requirements specific to the WD connection. Therefore corbel reinforcing and side reinforcing, which are consistent with requirements in [AASHTOa, 2015], are not included in the example.

1. Size Flange

$D_o = D + 16t = 44 + 16 \times 0.5 = 52 - in.$

Use a flange with $D_o = 52 - in.$**.**

2. Design Weld Between Flange and Tube

$w \geq \frac{1.31 F_{u,st} t}{F_{exx}} \geq \frac{1.31 \times 60 \times 0.5}{70} = 0.57 - in.$

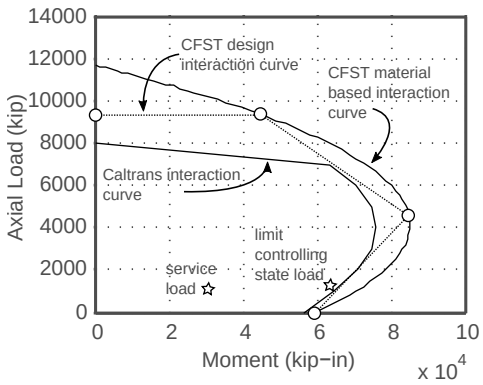

Figure 6: P-M Interaction Curve for CFST Component and WD Connection

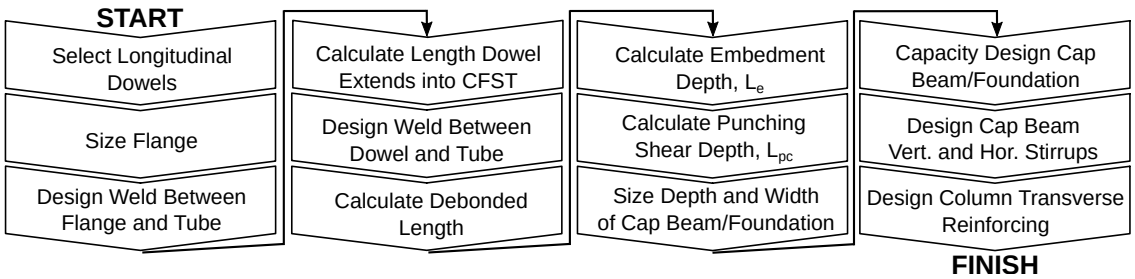

Figure 7: Flow Chart for Design of WD Connection

Use 0.625-in. fillet welds

3. Calculate Length Dowel Extends into CFST

The dowels are required to extend into the steel tube for a distance of $24d_b$.

$24d_b = 24 \times (11/8) = 33 - in.$

Extend the dowels $33 - in.$ **into the steel tube.**

4. Design Weld Between Dowel and Tube

The required weld length is defined in the specifications above. Assume 70XX electrodes with a tensile strength of 70-ksi.

$L_w = \frac{5.6A_bF_{y,b}}{F_{EXX}d_b} = \frac{5.6\times1.56\times68}{70\times1.375} = 6.17 - in.$

$L_w = \frac{0.83A_bF_{y,b}}{F_{y,st}t} = \frac{0.83\times1.56\times68}{50\times0.5} = 3.52 - in.$

$L_w = \frac{1.11A_bF_{y,b}}{F_{u,st}t} = \frac{1.11\times1.56\times68}{70\times0.5} = 3.36 - in.$

Use a weld length $L_w = 6.25 - in.$

5. Calculate Dowel Debonded Length

The debonded length is calculated assuming a target rotation demand of 8% and a steel ultimate strain of 0.09-in./in.

$L_{db} = \frac{tan\theta(D-t-d_b/2)}{0.7\epsilon_u} = \frac{tan(0.08)(44-0.5-1.375/2)}{0.7\times0.09} = 54.5 - in.$

Use a debonded length $L_{db} = 54.5 - in.$

6. Calculate Dowel Embedment Depth into Cap Beam

The dowels are required to extend into the cap beam according to equations in the specifications above.

$L_e \geq \frac{0.016*\psi*F_{y,b}}{\sqrt{f'_g}} = \frac{0.016\times1.0\times68000}{\sqrt{6000}} = 19.31 - in.$

$L_e \geq \sqrt{\frac{D^2}{4} + \frac{1.2F_{y,b}A_{st,b}}{6\pi\sqrt{f'_{c,cap}}}} - D/2 = \sqrt{\frac{44^2}{4} + \frac{1.2\times68000\times49.92}{6\pi\sqrt{6000}}} - 44/2 = 35.2 - in.$

$L_e \geq 3d_b + 0.5L_{db} = 3 \times 1.375 + 0.5 \times 54.5 = 31.375$

Extend the dowels for a distance $L_e = 35.25 - in.$ **into the cap beam.**

7. Calculate Required Punching Shear Depth Above the Headed Dowels

The required depth above the headed reinforcing to eliminate punching shear failure is defined in the proposed specifications.

$L_{pc} \geq 3d_h = 3 \times 3.25 = 9.75 - in$

Use a depth of at least 9.75-in. above the top of the headed dowels

8. Size the Precast Inverted T

A total super structure depth of at least $L_e + L_{pc}$ is required. Assuming we have an 8-in. thick slab on this bridge, a clear cover above the headed reinforcing of at least 1.75-in. is required in the inverted-t. Use a clear distance of 6.75-in. in the inverted-t in the interest of maintaining the same super-structure depth as Example 1.

The depth of the inverted-t=6.75+35.25=42-in.

Use an inverted-t depth of 42-in.

The width of the stem in the inverted-T beam is selected based on the diameter of the corrugated pipe (assuming modular construction method). The inner diameter of the corrugated pipe must exceed the diameter of the CFST plus one dowel head diameter. Galvanized corrugated pipe with an inner diameter of 54 in. is commercially available. Thus the width of the stem of the inverted-T beam must exceed this diameter with standard cover requirements.

Use a stem width of 60-in.

9. Capacity Design the Cap Beam to Resist $1.2M_{p,WDConnection}$

The plastic capacity of the WD connection is $1.2M_{p,WDConnection} = 79800kip - in.$. A ledge width of 22-in. is assumed based on the dimensions of the prototype bridge. 20 No. 10 bars in the bottom of the inverted-t and 12 No. 10 bars in the top of the inverted-t are initially tried. Additional cap beam reinforcing consisting of 14 No. 10 bars is included in the deck. The primary flexural reinforcing is arranged as shown in Fig. 2. The resulting flexural capacity of the cap beam are calculated as:

$M_n^+ = 86382kip - in$

$M_n^- = 85593kip - in$

Use 20 No. 10 bars in the bottom of the inverted-t and 12 No. 10 bars in the top of the inverted-t. Include 14 No. 10 bars in the deck for additional negative moment capacity.

10a. Design Vertical Stirrups in the Joint Region

The required shear reinforcing in the joint region is calculated using Equation 7.19 in Caltrans [2010].

$A_s^{jv} = 0.2A_{st,b} = 0.5 \times 49.92 = 10 - in.^2$

Use No. 6 vertical stirrups arranged as shown in Fig. 2.

10b. Design Horizontal Stirrups in the Joint Region

The required area of horizontal stirrups is consistent with the requirements in the Caltrans SDC [Caltrans, 2010]. One layer of horizontal stirrups must pass above the corrugated metal duct as illustrated in Fig. 2.

$\mathrm{A}_s^{jh} = 0.1A_{st} = 0.1 \times 49.92 = 5 - in.^2$

Use 3 rows of No. 6 hooks as shown in Fig. 2.

11. Design Transverse Column Reinforcing which Extends into the Cap Beam

The required transverse reinforcing ratio which extends into the joint region is defined in Equation 7.23 of Caltrans [2010].

$\rho_s = 0.4\frac{A_{st,b}}{L_e^2} = 0.4\frac{49.92}{35.25^2} = 0.016$

Try No. 9 hoops at 3-in. c-c $\longrightarrow \rho_s = 0.016$

Use No. 9 hoops at 3-in. c-c.

References

AASHTOa (2015). *AASHTO LRFD Bridge Design Specification*. American Association of State Highway and Transportation Official, Washington, DC.

ACI (2011). *Building Code Requirements for Structural Concrete*. American Concrete Institute, Farmington Hills, MI.

AISC (2011). *Steel Construction Manual*. American Institute of Steel Construction, Chicago, IL, 14 edition.

Caltrans (2010). *Caltrans Seismic Design Criteria*. California Department of Transportation, Sacramento, CA.

Lehman, D. and Roeder, C. (2012a). Foundation connection for circular concrete filled tubes. *Journal of Constructional Steel Research*, 78:212–225.

Lehman, D. and Roeder, C. (2012b). Rapid construction of bridge piers with improved seismic performance: An initial study in the use of concrete filled steel tubes for bridge piers and foundation connections. Technical Report CA12-1972, California Department of Transportation.

Montejo, L., Kowalsky, M., and Hassan, T. (2009). Seismic behavior of flexural dominated reinfored concrete bridge columns at low temperatures. *Journal of Cold Regions Engineering*, 23:18–42.

Restrepo, J., Tobolski, M., and Matsumoto, E. (2011). Development of a Precast Bent Cap System for Seismic Regions. Technical Report 681, NCHRP.

Stephens, M., Lehman, D., and Roeder, C. (2015). Concrete filled tube bridge pier connections for accelerated bridge construction. Technical Report CA15-2417, California Department of Transportation.