Integral Abutment Connection Details for Accelerated Bridge Construction

Final Report
October 2018

Sponsored by
Accelerated Bridge Construction
University Transportation Center

U.S. Department of Transportation
Office of the Assistant Secretary for
Research and Technology

BRIDGE ENGINEERING CENTER

IOWA STATE UNIVERSITY
Institute for Transportation

About the ABC-UTC

The Accelerated Bridge Construction University Transportation Center (ABC-UTC) is a Tier 1 UTC sponsored by the U.S. Department of Transportation Office of the Assistant Secretary for Research and Technology (USDOT/OST-R). The mission of ABC-UTC is to reduce the societal costs of bridge construction by reducing the duration of work zones, focusing special attention on preservation, service life, construction costs, education of the profession, and development of a next-generation workforce fully equipped with ABC knowledge.

About the BEC

The mission of the Bridge Engineering Center (BEC), which is part of the Institute for Transportation (InTrans) at Iowa State University, is to conduct research on bridge technologies to help bridge designers/owners design, build, and maintain long-lasting bridges. The mission of InTrans is to develop and implement innovative methods, materials, and technologies for improving transportation efficiency, safety, reliability, and sustainability while improving the learning environment of students, faculty, and staff in transportation-related fields.

ISU Non-Discrimination Statement

Notice

Quality Assurance Statement

Technical Report Documentation Page

1. Report No. ABC-UTC-2013-C3-ISU02-Final	**2. Government Accession No.**	**3. Recipient's Catalog No.**
4. Title and Subtitle **Integral Abutment Connection Details for Accelerated Bridge Construction**		**5. Report Date** October 2018 6. **Performing Organization Code**
7. Authors Behrouz Shafei (orcid.org/0000-0001-5677-6324), Travis Hosteng (orcid.org/0000-0002-2059-1296), and Austin DeJong (orcid.org/0000-0002-7797-9988)		**8. Performing Organization Report No.**
9. Performing Organization Name and Address Bridge Engineering Center Iowa State University 2711 South Loop Drive, Suite 4700 Ames, IA 50010-8664		**10. Work Unit No. (TRAIS)** **11. Contract or Grant No.** DTRT13-G-UTC41
12. Sponsoring Organization Name and Address Accelerated Bridge Construction University Transportation Center Florida International University 10555 W. Flagler Street, EC 3680 Miami, FL 33174	U.S. Department of Transportation Office of the Assistant Secretary for Research and Technology and Federal Highway Administration 1200 New Jersey Avenue, SE Washington, DC 20590	**13. Type of Report and Period Covered** Final Report (June 2017 – September 2018) **14. Sponsoring Agency Code**
15. Supplementary Notes Visit www.intrans.iastate.edu for color pdfs of this and other research reports from the Bridge Engineering Center at Iowa State University.		

16. Abstract

During bridge construction, closures have significant impacts on traffic flow for the public. To alleviate this impact, the presence of precast elements is being introduced in the design and construction of bridges, which would increase the efficiency of construction and convert month-long, or even year-long, closures into a matter of weeks, or perhaps even days. This strategy, known as accelerated bridge construction (ABC), is growing in popularity within the bridge community and is gaining traction for research projects to investigate how the construction of bridge elements can be expedited.

One such element being investigated is the integral abutment. This structural connection for bridges was introduced to eliminate the need for expansion joints between the substructure and superstructure, where the presence of water and other deteriorating chemicals caused long-term and frequent maintenance issues. The integral abutment alleviates the need for the expansion joint by having the superstructure rigidly connected to the foundation to cause the two elements to act together in response to traffic loads, as well as thermal expansions and contractions. Due to this area needing to be heavily reinforced, congestion issues arise when attempting to apply ABC methods. In addition to the reinforcing congestion, the construction tolerances and weight of the integral abutments cause some problems for ABC projects. These issues were the basis for this project to investigate the use of couplers and ultra-high performance concrete, while applying ABC techniques.

The foundation element of focus was the pile cap, and the superstructure element investigated was the integral diaphragm, which consists of the deck and cast-in-place beam. The strength and durability of the connection details were evaluated through full-scale laboratory testing that applied simulated thermal loads and live loads. Strain gauges were used to capture the development and strength of the specimen and connecting materials, and displacement transducers monitored the propagation and magnitude of precast joint openings between the integral diaphragm and pile cap to evaluate the durability of the connection details. The results of these tests were compared to the control specimen tested in Phase I, and also used to compare the revised designs in Phase II to the original designs from Phase I.

17. Key Words accelerated bridge construction—connection details—full-scale structural tests—integral abutments		**18. Distribution Statement** No restrictions.	
19. Security Classification (of this report) Unclassified.	**20. Security Classification (of this page)** Unclassified.	**21. No. of Pages** 114	**22. Price** NA

Form DOT F 1700.7 (8-72) **Reproduction of completed page authorized**

(this page is intentionally left blank)

Integral Abutment Connection Details for Accelerated Bridge Construction

Final Report
October 2018

Principal Investigator: Travis Hosteng
National Center for Wood Transportation Structures, Iowa State University

Co-Principal Investigator: Behrouz Shafei
Bridge Engineering Center, Iowa State University

Authors
Behrouz Shafei, Travis Hosteng, and Austin DeJong

Sponsored by
Accelerated Bridge Construction University Transportation Center

A report from
Bridge Engineering Center
Institute for Transportation
Iowa State University
2711 South Loop Drive, Suite 4700
Ames, IA 50010-8664
Phone: 515-294-8103 / Fax: 515-294-0467
www.intrans.iastate.edu

DISCLAIMER

TABLE OF CONTENTS

LIST OF FIGURES

ACKNOWLEDGMENTS

This project was sponsored by the Accelerated Bridge Construction University Transportation Center (ABC-UTC at www.abc-utc.fiu.edu) at Florida International University (FIU), as the lead institution, and Iowa State University (ISU) as a partner institution, and the U.S. Department of Transportation (DOT) Office of the Assistant Secretary for Research and Technology.

The research team would like to extend a special appreciation to the ABC-UTC, and they would like to thank the Iowa DOT for providing match funds and support for this project.

Thanks should be given to Jim Nelson with the Iowa DOT for his guidance throughout these research efforts, as well as the rest of the technical advisory committee for their professional engineering input on the designs of the specimens and the methodologies for constructing and evaluating the specimens.

Appreciation should also be given to Doug Wood, Owen Steffens, and the undergraduate hourly workers with the Iowa State University Structural Engineering Research Laboratory for assistance with specimen construction and testing.

EXECUTIVE SUMMARY

During bridge construction, new or replacing, traffic closures have significant impacts on traffic flow for the public. To alleviate this impact, the presence of precast elements for bridges is being introduced to bridge engineering and construction, which would increase the efficiency of construction and turn month-long, or even year-long, closures into a matter of weeks, or perhaps even days. This strategy is known as accelerated bridge construction (ABC) and is growing in popularity within the bridge community and is gaining traction for research projects into investigating elements of the bridge and how their construction can be expedited.

One such element being investigated is the integral abutment. This structural connection for bridges was introduced to eliminate the need for expansion joints between the substructure and superstructure, where the presence of water and other deteriorating chemicals caused long-term and frequent maintenance issues. The integral abutment removes the need for the expansion joint by having the superstructure being rigidly connected to the foundation to cause the structure to act together in response to traffic loads, as well as thermal expansions and contractions. Due to this area needing to be heavily reinforced, congestion issues arise when attempting to apply ABC methods. Also, the construction tolerances and weight of the integral abutments cause some problems for ABC projects.

These issues were the basis for this project to investigate the use of mechanical couplers to splice the foundation elements to the superstructure elements of bridges while applying ABC techniques, the lateral slide being the technique of focus, but other techniques such as self-propelled modular transporters (SPMTs) could also be applied.

The foundation element of focus was the pile cap, and the superstructure element investigated was the integral diaphragm, which consists of the deck and cast-in-place beam. Since this was a Phase II project, the methodologies and laboratory setup for evaluating the ABC connection details were the same as that of Phase I.

The Phase I investigation consisted of a cast-in-place integral abutment connection, which was the control specimen, and two ABC connections utilizing mechanical couplers. From the results of Phase I, three connection details were investigated for Phase II. Two of these were a revised design of the two mechanical coupler connection details tested in Phase I, and the third was a new connection detail designed through the Iowa Department of Transportation (DOT) to be used on an upcoming real-life project.

The strength and durability of the connection details were evaluated through full-scale laboratory testing that applied simulated thermal loads and live loads. Strain gauges were used to capture the development and strength of the specimen and connecting materials, and displacement transducers monitored the propagation and magnitude of precast joint openings between the integral diaphragm and pile cap to evaluate the durability of the connection details. The results of these tests were compared to the control specimen tested in Phase I, and were also used to compare the revised designs in Phase II to the original designs from Phase I.

The grouted reinforcing bar coupler design was revised to use only 8 splices rather than the 17 used in Phase I. This revision helped to alleviate the tight construction tolerances present with the Phase I design, and it was designed to maintain allowable structural behavior throughout the cold joint connection. A plywood template was used to “match cast” the grouting sleeves of the integral diaphragm to the protruding bars from the pile cap and was proven successful through a “dry fit” done prior to the installation of the connection. Results from the full-scale testing showed the revised connection had adequate strength and proper development of connecting materials while having reasonable cracking behavior compared to the Phase I results.

The pile coupler design was revised to have four 2.5-foot steel sections splicing the integral diaphragm and the pile cap, rather than only two sections, that were encased in a cementitious material. The corrugated metal pip (CMP) voids’ alignment was not as complex compared to the alignment for the grouted reinforcing bar coupler, which was a benefit for the connection. The overall construction of the specimen was not difficult, but it was tedious because more accessories were required for the connection elements, specifically within the integral diaphragm. The full-scale testing resulted in the assumed cracking behavior and connection material development that could be comparable to the Phase II grouted reinforcing bar coupler results, since the Phase I results for the pile coupler connection were not acceptable.

The ultra-high performance concrete (UHPC) joint design utilized a “notched” cross section formed into the integral diaphragm, protruding reinforcing bars from the integral diaphragm and pile cap, and filling the void between the two precast elements with UHPC. The construction of the precast elements was not difficult and should be achievable for experienced fabricators. The results from the testing were very promising for the advancement of the connection, since the size of the precast joint opening and development of connecting materials was comparable to the control specimen from Phase I.

With this project completed, further investigations about integral abutment connection details for ABC applications should be conducted to provide more detailed information on the subject. Such investigations would be further revisions to the designs of the connection details and field monitoring of real-world applications of the connections.

CHAPTER 1. INTRODUCTION

1.1 Background

Accelerated Bridge Construction (ABC) has started to become the preferred construction procedure for many bridge engineering agencies around the world and in the United States. ABC is being analyzed and formulated to replace conventional bridge construction due to the significant decrease in construction time and traffic impact, as well as the increase in bridge element quality and worker and public safety. ABC can replace an existing bridge in a matter of weeks, or even days, due to the presence of prefabricated bridge elements and systems (PBES) that can be quickly assembled. This introduces several advantages compared to conventional bridge construction, which can have construction times of months and cause detours that greatly affect the flow of traffic, as well as the safety of the public and construction workers.

ABC differs from conventional bridge construction by utilizing PBES and other technologies to lift, slide, and rotate parts of a bridge into the connection. These connections have been, and still are being, researched and tested for many locations within a bridge. One connection still under research and testing is the integral abutment. An integral abutment is a connection composed of combined shear and moment connections between the bridge superstructure and substructure. This connection is appealing to bridge designers since it results in the elimination of the expansion joint, which typically is the common location of structural deterioration.

The superstructure and substructure, in conventional bridge construction, is connected by an expansion joint. These components allow the infiltration of water, debris, and deicing chemicals when not designed properly. These infiltrations can cause structural deterioration and corrode elements of the abutment connection, which may compromise the integrity of the bridge. These issues cause the need for the integral abutment connection, which can reduce the cost of maintaining the bridge since there are no joints to allow infiltration.

Since the integral abutment reinforcement can be highly congested to resist the different forces acting on both the substructure and superstructure, the issue of transporting and installing these elements govern the design in ABC applications. The issue of transporting comes from the weight of the specimen, and the installation issues are the result of the splices that will need to be connected after the lift and slide have been completed.

To alleviate these issues, the method of cast-in-place integral abutments has been the common procedure for this ABC connection. This procedure facilitates the tolerances of the connection during construction by creating a simpler integral connection, which is done by placing the prefabricated pile cap on the driven piles, setting the prefabricated girder, and then placing a closure pour over the connection to create the integral connectivity. A major shortcoming of this connection detail is the closure pour typically consists of high-performance concrete (HPC) or regular concrete. These materials need up to a week of curing time to be structurally safe for traffic and causes delays in opening up the bridge.

1.2 Research Scope, Objectives, and Tasks

The scope of this research is to revise the connection detail designs from Phase I, provide information for the construction of each connection detail, specifically any issues encountered, and laboratory test results to aid in the planning, design, and construction of the integral abutment to be used in ABC projects. The Bridge Engineering Center (BEC) at Iowa State University (ISU) discussed other possible connection details, as well as revisions to the connection detail designs from Phase I, for integral abutments for ABC, of which, three designs were selected for full-scale laboratory investigation. The laboratory specimens were evaluated on three criteria: constructability, strength, and durability.

The following five tasks were completed to meet the objectives of the project:

1. Conduct a detailed review of the results from Phase I, as well as a literature review of ABC procedures with respect to integral abutments.
2. Develop and design connection details for an integral abutment using ABC methods, as well as results of Phase I.
3. Investigate and evaluate the constructability aspects of the connection details and adjust designs accordingly. Also, test the flowability of UHPC through the designed cross-section of the UHPC joint connection detail.
4. Construct and test full-scale specimens of the connection details in the laboratory, measuring the performance of the detail in terms of durability and strength.
5. Summarize the results of this study for the future use of integral abutments in ABC applications.

CHAPTER 2. LITERATURE REVIEW

2.1 Accelerated Bridge Construction (ABC) Manual (2011)

The ABC Manual (Culmo 2011) defines an integral abutment as follows:

"A bridge abutment type that is made integral with the bridge superstructure through a combined shear and moment connection. They are often constructed with a single row of piles that allow for thermal movement and girder rotation. Soil forces behind the abutments are resisted through the strut action of the superstructure."

The implementation of a cast-in-place concrete closure pour is typically the method used in ABC to create the integral abutment connection (Figure 1).

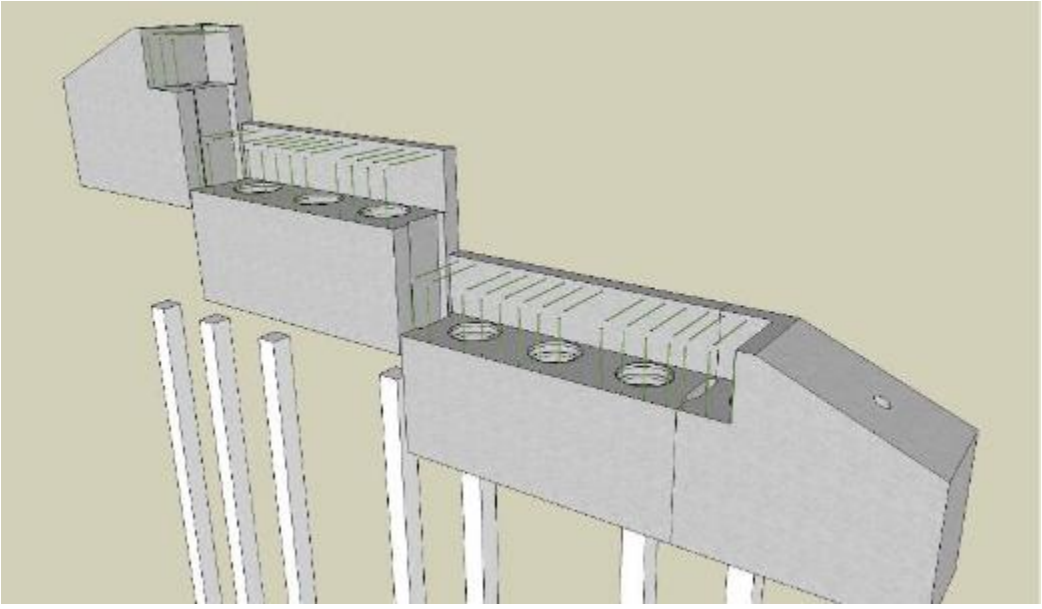

Utah DOT

Figure 1. Prefabricated integral abutment, prior to closure pour

While this connection has been the normal procedure, other connections such as mechanical and grouted couplers are favorable alternatives. These couplers would be ideal when compared to a cast-in-place connection for the ease of construction, as well as the decrease in time to complete the connections. The factor limiting the benefits of couplers is the tighter tolerances when installing the bridge elements to be constructed, as well as the smaller construction spaces in which to install the connections themselves.

This covers a multitude of construction aspects regarding ABC projects, such as contracting and decision-making procedures, but one important construction aspect outlined was the differences in placement methods. A few methods outlined were self-propelled modular transporters (SPMTs), longitudinal launching, horizontal skidding/sliding, and conventional cranes. Of these

options, the horizontal skidding/sliding option became the method of focus for the connection details to be designed and investigated on the basis that if the connection details were acceptable for horizontal sliding, then they would be acceptable for the other technologies as well since horizontal sliding could pose issues with some protruding elements of the connections. This method typically involves erecting the new bridge parallel to the existing bridge, or final location of the bridge, and then sliding the new bridge into location after the old bridge is demolished, or the substructure is complete. The slide can be done via numerous methods, but typically hydraulics and rollers allow for the lateral movement of the bridge elements.

2.2 Innovative Bridge Designs for Rapid Renewal – ABC Toolkit (2013)

The integral abutments defined in the ABC Toolkit (HNTB Corporation et al. 2013) are based on a pile driving tolerance of 3 in. in all directions of the specified locations. Precast pile caps are fabricated with voids created from corrugated metal pipe (CMP), which are designed to fit around the driven piles and then filled with self-consolidating concrete (SCC) providing the connection between the abutment and piles.

Integral abutments are most advantageous to ABC when connections between the elements of the integral connection can be made efficiently, as well as effectively. The integral connection, otherwise called "jointless construction," enhances the longevity of the bridge due to the exposure of structurally deteriorating materials being eliminated. This connection between the integral diaphragm and pile cap is typically completed through a cast-in-place concrete closure pour, which requires minimal formwork to provide adequate support for the placement of the closure pour. Therefore, contractors normally pursue this type of connection, but the time to let the concrete reach the specified strength introduces the need for different connections.

To mitigate the issue of concrete cure time, the concept of installing prefabricated integral abutment elements arises. By having all elements being installed efficiently, and connected with advanced connection technology, construction time can be minimized. One such connection technology brought up in the toolkit is the grouted splice coupler. During fabrication, a template should be created for each element to contain a part of the coupler to ensure the minimal tolerances will be met during the placement of the elements. Also, the toolkit recommends a "dry-fit" be completed with the connection prior to the elements' shipment to the project site, as to alleviate probable construction issues in the field (HNTB Corporation et al. 2013).

2.3 Iowa Accelerated Bridge Construction History (2014)

Since 2006, ABC has been utilized for bridge construction in Iowa. This paper described five key ABC projects that have advanced the understanding and application of ABC to the Iowa Department of Transportation (DOT). The five projects, along with their major impact for furthering ABC, and some lessons learned after completion of the project are listed (Nelson 2014):

1. Mackey Bridge
    a. Pile Pocket Connection verified
    b. Consider prestressing precast substructure elements for dynamic impact loads experienced during transportation
2. Madison Bridge
    a. A pile driving tolerance of 3 inches was implemented for the Pile Pocket Connection, and well executed by the contractor
    b. Use of a flowable mortar to fill the void under abutment footing made by temporary blocking used to set the element to the correct elevation
3. 24th Street Bridge over I-29/I-80 in Council Bluffs
    a. Sandblasting was used to roughen precast concrete surfaces for adequate bonding to cast-in-place concrete
4. Keg Creek Bridge
    a. When grouted couplers are to be used in connecting prefabricated elements, a template should be used to alleviate minimal tolerances in the field
    b. Grouted splice couplers are a very efficient and effective technology for connecting prefabricated elements
    c. The semi-integral detail with an overhanging backwall posed a forming issue to properly prevent leakage of the UHPC placed to complete the integral connection
5. Massena Lateral Bridge Slide
    a. From a project bid standpoint, design alternatives of a precast and a cast-in-place concrete abutment to allow the contractors to choose which alternative would best suit their capabilities
    b. In cases where either more or larger, piles are required, design alternatives that implement different piling alternatives as well as precast and cast-in-place concrete abutments

2.4 Connection Details for Prefabricated Bridge Elements and Systems (2009)

The common practice during construction of integral abutments has been to place the precast pile cap on top of the driven piles, place the precast girder, and then place a closure pour over the connection to create an integral connection between the two elements (Figure 2).

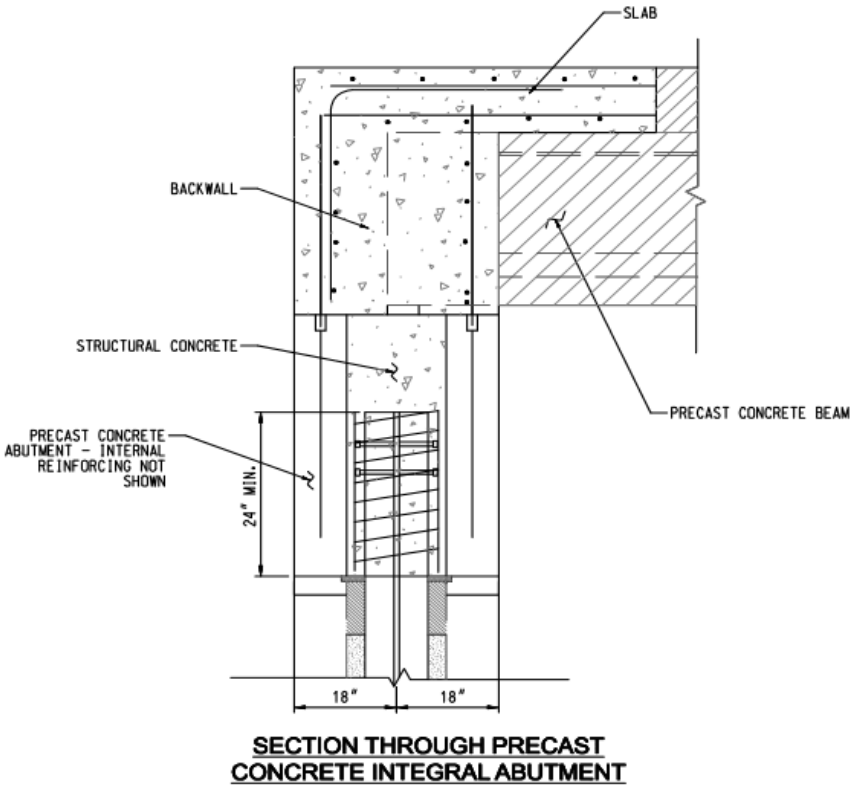

Iowa DOT

Figure 2. Cast-in-place integral abutment connection

The integral connection eliminates bridge deck joints, which are typically the location of structural deterioration due to water and deicing chemicals. While the cast-in-place method is advantageous in the connectivity of the integral connection, it does require more construction time, which then causes more traffic diversion time (Culmo 2009).

To eliminate some of this construction time, the use of different integral connections is being introduced to the bridge engineering spectrum. One of these is the use of grouted reinforcing bar splice couplers, which utilizes a protruding reinforcing bar on one element being inserted into a sleeve in the other element to be connected (Figure 3).

Texas DOT

Figure 3. Grouted reinforcing bar splice couplers

These two elements are then connected via the sleeve being filled with a grouting material to confine the reinforcing bar within the sleeve. While the construction tolerances of this connection are less than that of the cast-in-place, the time to construct this connection is minimized to a day or less compared to the one-, or two-, day timeframe for the installation of a cast-in-place connection using high early strength concrete (Culmo 2009).

2.5 Precast Concrete Elements for ABC: Volume 1-1. Laboratory Testing of Precast Substructure Components: Boone County Bridge (2009)

One of the objectives was to find the actual strength of the connection between the precast abutment cap and the piles, as well as to document the construction process, particularly any problems or difficulties that occurred.

The setup of the specimens was representative of the conditions that would be applied to the element in the field. A single-pile (Figure 4) and double-pile (Figure 5) cap abutment was set up and tested similarly by applying loads onto the inverted pile cap setup.

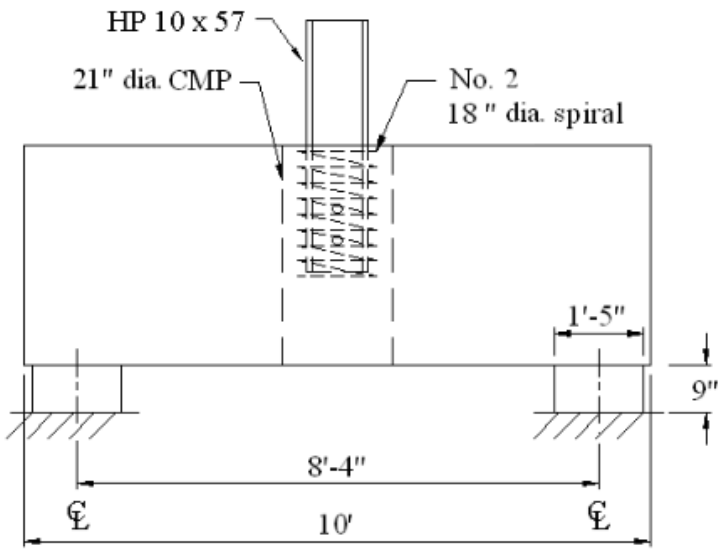

Bridge Engineering Center

Figure 4. Single pile abutment test support details

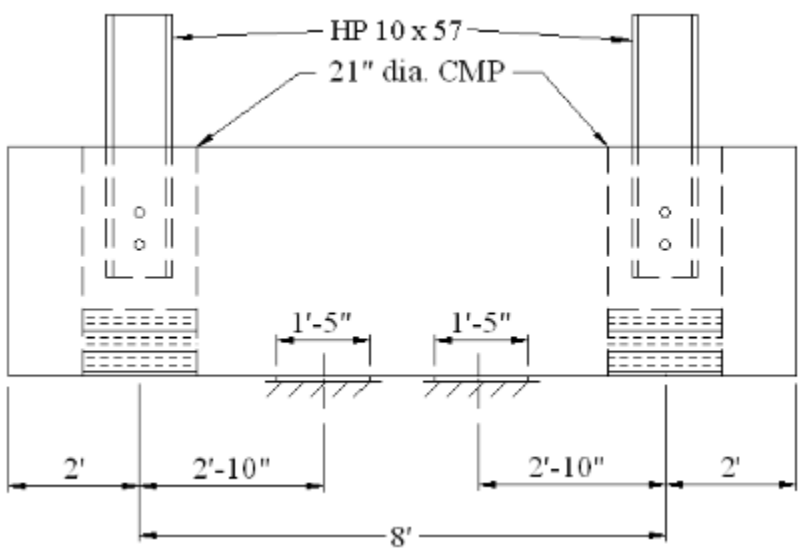

Bridge Engineering Center

Figure 5. Double pile abutment test support details

The single-pile cap abutment was designed to represent a negative moment applied in the field, and the double-pile cap abutment was to represent a positive applied moment in field conditions. Also, since the double-pile cap had yet to fail after moment testing, a shear test was conducted to see if the connection would fail through "punching" through the precast section.

After testing both pile abutment specimens, it was reported: "*that there is no concern for a shear failure between the H-pile and the concrete, or between the precast concrete in the CMP*." The failure recorded for both specimens was a flexural-shear failure when loaded to a minimum of

4.5 times the unfactored design load for the single-pile abutment and loaded to approximately two times the unfactored design load for the double-pile abutment. Note the orientation of the double-pile abutment resulted in more severe loading compared to loading of the element in the field.

The construction of the pile cap abutments was reported to have gone smoothly with the only waiting time being the arrival of the delivery truck. There were no clearance issues recorded between the CMP and the H-piles (HPs), and the installation of the abutments took approximately 15 minutes (Wipf et al. 2009) (Figure 6).

Bridge Engineering Center

Figure 6. Abutment being lowered into place

2.6 Laboratory Investigation of Grouted Coupler Connection Details for ABC Bridge Projects (2015)

Grouted reinforcing steel couplers were tested for strength and durability in bending, specifically to represent the field application of the connection used in the Keg Creek Bridge. To accomplish this, seven specimens were erected in two parts and connected via two #14 epoxy-coated grouted reinforcing steel couplers in the tension zone of the square columns (Figure 7).

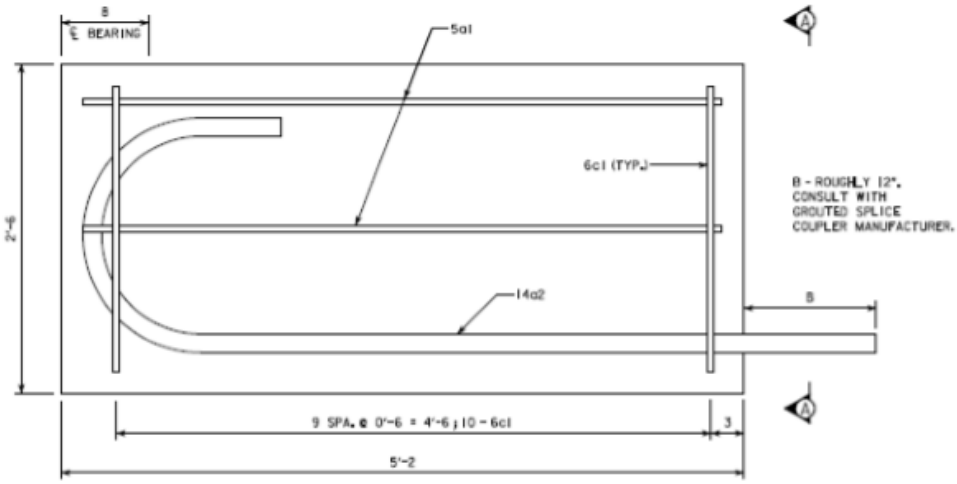

Side A

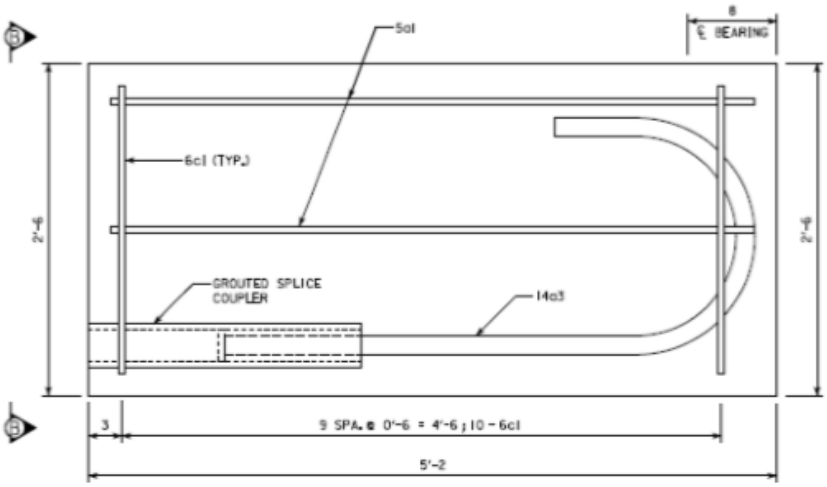

Side B

Bridge Engineering Center

Figure 7. Grouted coupler specimen plan view

Five of the seven specimens utilized the W.R. Meadows 588-10K grout to fill the grout bed, while two used UHPC. The specimens were erected, underwent a “dry-fit” for the coupler connections, were grouted together per manufacturer’s instructions, and were set up for four-point testing (Figure 8).

Bridge Engineering Center

Figure 8. Specimen setup for static four-point bending test

Six of the specimens were to undergo static testing to peak loads, while one of the specimens was tested to fatigue under 1 million cycles under a load specifically designed to induce a fatigue stress specified by the American Association of State Highway and Transportation Officials (AASHTO) Load and Resistance Factor Design (LRFD) specification when a member is being fatigue-loaded greater than or equal to 1 million cycles.

It was suggested to the research team that an axial load be applied to the ends of the specimen to represent the dead load of the bridge on the columns and that these additional loads may have an impact on results of the four-point bending tests (Figure 9).

Bridge Engineering Center

Figure 9. Specimen setup for static four-point bending test with applied axial load

In addition to the four-point bending test, corrosion testing was done on three cylinders with the grouted reinforcing steel coupler to determine if corrosion of the reinforcing steel was probable when submerged in a 3% chlorine bath for six months (Figure 10).

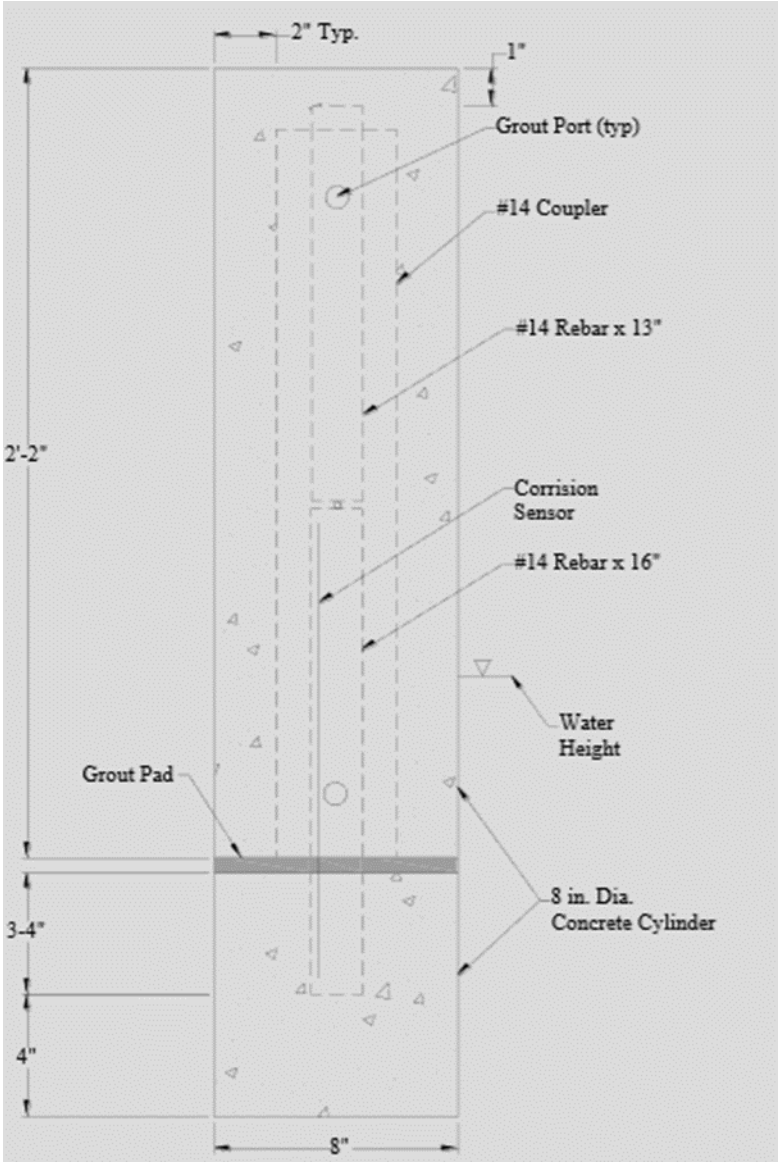

Bridge Engineering Center

Figure 10. Cross-section view of coupler specimens for chloride penetration tests

The following conclusions were made based on the results of testing the specimens (Hosteng et al. 2015):

- The UHPC grouting material hindered the crack from forming instantaneously upon loading of the specimen, unlike that of the W.R. Meadows 588-10K grout, but there was no apparent gain in the level of the cracking during loading and unloading
- Axially loading the specimen resulted in minimal effects on the performance of the grouted reinforcing steel couplers subjected to bending, as well as the initiation of cracking at the grout interface
- Empirical calculations were well correlated to the results of the static four-point bending tests, hence verifying the design assumptions

- With no cracks present in the three cylinders for the corrosion testing on the couplers, no evidence of corrosion was detected

2.7 Evaluation of Grout-Filled Mechanical Splices for Precast Concrete Construction (2008)

The Michigan DOT (MDOT) issued a project to research the strength and durability of grout filled mechanical splices, since at the time there were few tests done on the technology, and MDOT was preparing plans to construct their first bridge with grout filled mechanical splices. Two companies submitted products to be tested by MDOT: Erico, Inc. with the Lenton Interlok, and Splice Sleeve North America Inc. with the NMB Splice Sleeve.

To evaluate the grout filled mechanical splices, five tests were planned to be performed on the specimens:

- Slip test
- High cycle fatigue test
- Post-fatigue slip test
- Ultimate load test
- Creep under sustained load

To ensure there would be no concentric loading on the specimens, the specimens were constructed vertically in a constructed fixture to hold each piece of the splicing mechanism in place vertically while being installed. The Lenton Interlok (Figure 11) has one threaded end and one grout filled end, while the NMB Splice Sleeve (Figure 12) has both ends grout filled.

Michigan DOT

Figure 11. Lenton Interlok specimens

Michigan DOT

Figure 12. NMB splice sleeve specimens

Through analysis of the data from testing the specimens, the following conclusions were reached (Jansson 2008):

- Both products met AASHTO requirements for slip, fatigue, and 125% of F_y in tension
- Epoxy-coated and uncoated reinforcing steel did not have significant effects on creep displacement, nor slip, but epoxy-coated did display lower ultimate loads
- Differences in test results of the two products is likely due to the Lenton Interlok having one end threaded and one end grouted, unlike the NBM Splice Sleeve which had both ends grouted

2.8 Precast Column-Footing Connections for ABC in Seismic Zones (2013)

ABC connections between elements in moderate or high seismic zones have not been used extensively due to the uncertainty of the seismic performance of the connections. To advance the documentation and knowledge of ABC connections in seismic regions, the California DOT (Caltrans) studied two types of mechanical bar splices, up-set headed coupler (HC) and grouted-filled sleeve coupler (GC) (Figure 13), by testing against a cast-in-place column-footing connection, specifically focusing on detailing of the connection for seismic regions.

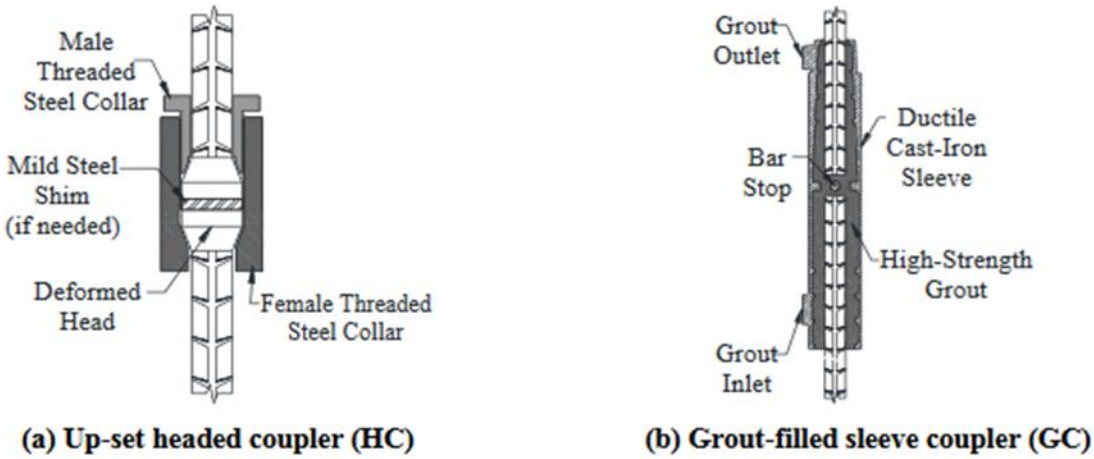

Caltrans

Figure 13. Mechanical splices used for this investigation

To study these connections for strength, durability, and seismic design tolerances, three experimental studies were performed on the connections. These studies were as follows:

- Half-Scale Column Models
    - Five half-scale reinforced concrete bridge column models based on the Caltrans seismic design criteria (SDC) for a displacement ductility design made to achieve large inelastic deformations before the specimen failed. The precast elements of the column-footing had geometry and reinforcement details commonly used in California with modern seismic detailing.
- Testing of Individually Mechanically-Spliced Bars
    - Uniaxial tests on individual HC and GC devices, static and dynamic, were performed to aid in the analytical testing of the half-scale specimens.
- Analytical Studies
    - Models of both the individual components of the mechanical splices and the half-scale columns were made into OpenSEES using plasticity frame-elements with uniaxial fiber-sections. These models were compared to the results of the half-scale column models, as well as the testing of the individual mechanical splices, to validate the modeling methods.

Through the analysis of the results of the three studies, the following conclusions were made about mechanical bar splices for ABC applications in seismic zones (Haber et al. 2013):

- Mechanical bar splices are a practical option to replace cast-in-place connections for ABC
- Caltrans and AASHTO restrictions on couplers should be lifted, or at least revised
- HC and cast-in-place connections for the half-scale columns had similar behavior for seismic behavior
- GC had a lower drift capacity than the cast-in-place and HC, but the seismic performance was still acceptable

- The analytical models' calculated results were well correlated with the measured results of the half-scale column models
- All couplers failed due to bar fracture, away from the coupler, for the tension tests to individual couplers

2.9 Plastic Energy Absorption Capacity of #18 Reinforcing Bar Splices under Monotonic Loading (1996)

Strain criterion for reinforcing steel bar splices was desired to be established to be included with the strength criterion for rebar splices for Caltrans, which is 125% F_y. This additional criterion was sought after to have mechanical bar splices potentially replace welded splices in the plastic hinge region. To do this, a study was created to test six #18 bar mechanical splicing systems, which were prequalified by Caltrans, under monotonic loading of the spliced samples in tension to fracture.

This study concluded some welded reinforcement connections may be replaced by mechanical bar splices in the plastic hinge zone due to the coupler's performance in dissipating strain energy throughout the connection. Also, a strain minimum needs to be further studied and set by design standards due to the result of some splices potentially failing before the yield strain is developed in the reinforcing bars, which was seen in the threaded mechanical bar splices in the study by some of the reinforcing bars simply slipping out of the threaded connection prior to yielding (Noureddine 1996).

2.10 Performance of Reinforcement Bar Mechanical Couplers at Low, Medium, and High Strain-Rates (2015)

In the design of structures subjected to blast effects, a large quantity of reinforcement is used in concrete slabs, beams, and at corners of a structure. This results in high congestion and difficulty of placing reinforcement, as well as increasing construction costs. To alleviate these issues, mechanical splices are being introduced into detailing of blast-resistant structures. Previous literature allows this application but has been updated to now require certain results in strain testing the connection to allow the development of ultimate dynamic tensile strength of the reinforcing bar while allowing ductility of the steel to remain present. The driving parameter set by literature for the results of strain testing the mechanical connection is that *"…all tests shall demonstrate the development of a minimum 3% strain in the rebar…*"

This design standard set the objective for this study to test the performance of mechanical couplers when subjected to high-strain rate stressing. This study would either validate available couplers or provide a guide for further testing and validation of mechanical couplers in blast-resisting structures. To do this, control specimens were tested in tension as were the specimens of both reinforcing bar and a mechanical coupler (Figure 14).

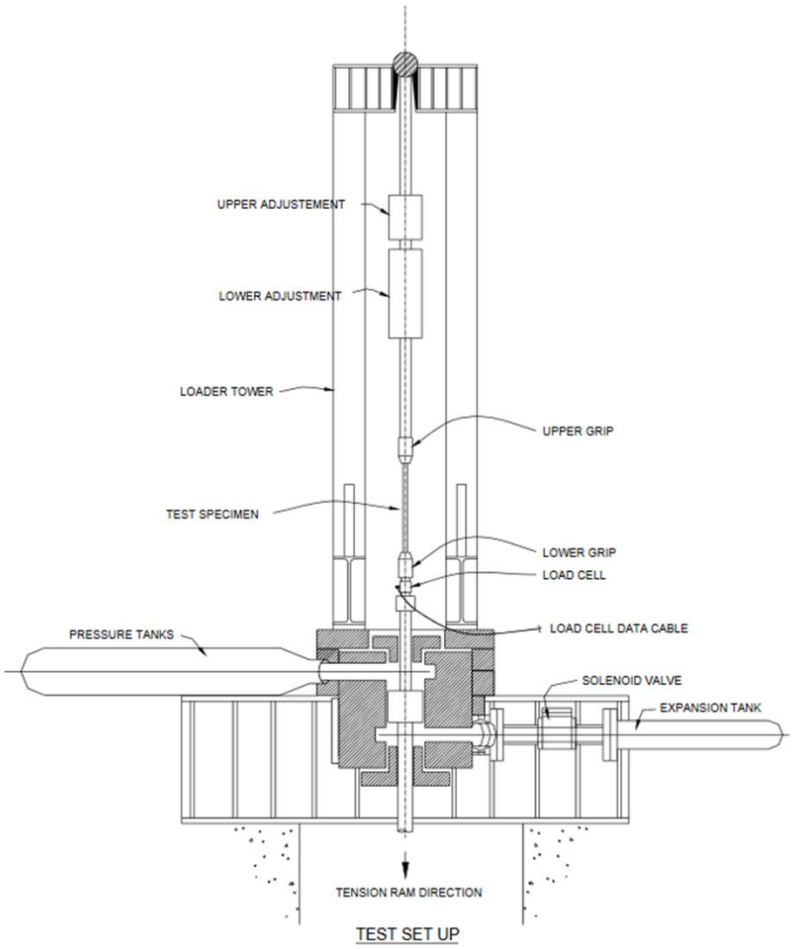

US Army Corps of Engineers

Figure 14. Test setup

Five mechanical couplers were to be tested:

- Up-set-head and coupling sleeve with straight threads
- Grout-filled coupling sleeve
- Shear-screw coupling sleeve
- Taper-thread system
- Thread-like deformed reinforcement bar coupler system

The results of the testing were that only one of the five coupler products passed the updated criterion without requiring further testing, which was the grout-filled coupling sleeve. The shear-screw coupling sleeve and taper thread coupler specimens both failed the new criterion, while the last two require further testing to validate them under the new criterion and be applied to blast-resistant structures (Rowell 2015).

2.11 Laboratory and Field Testing of an ABC Demonstration Bridge: US Highway 6 Bridge over Keg Creek (2013)

With the application of ABC, advanced material closure-pours and quick-to-install construction details are required, in addition to the prefabricated elements. This study focused on the performance of the bond between the concrete deck made of HPC and the closure pour consisting of UHPC, through both laboratory and field measurements.

The bond testing in the laboratory measured the strength of the bond through two test types: Direct Tension Testing and Simulated Modulus of Rupture (MOR) Testing. The direct tension testing consisted of 4 in. diameter cylinders cast in half with a threaded steel rod, one half precast HPC that cured 28 days, and then the other half was UHPC match cast onto the half-cylinder. The interface preparation of the specimens varied, as to see how it affected results, between 1,500 psi pressure wash, 3,000 psi pressure wash, plywood (untreated), sandblasted, groove cut, and epoxy bonding agent (Figure 15).

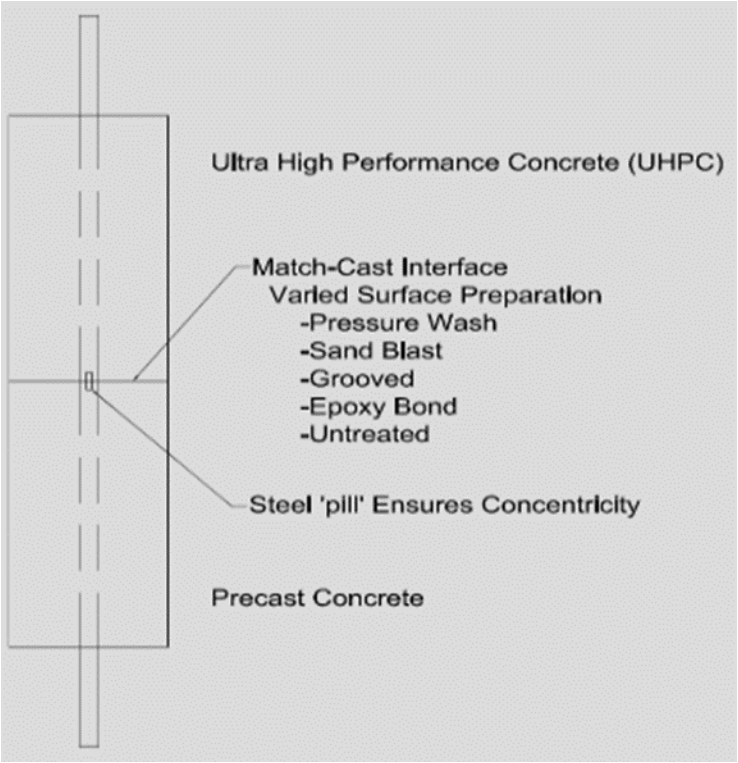

Iowa State University

Figure 15. Direct tension test specimen

The simulated MOR testing had beams that were cast similarly to the cylinders for the direct tension test, with one half being precast HPC and the other half being match casted UHPC (Figure 16). The bond was then tested by computing stresses in the beam under three-point bending.

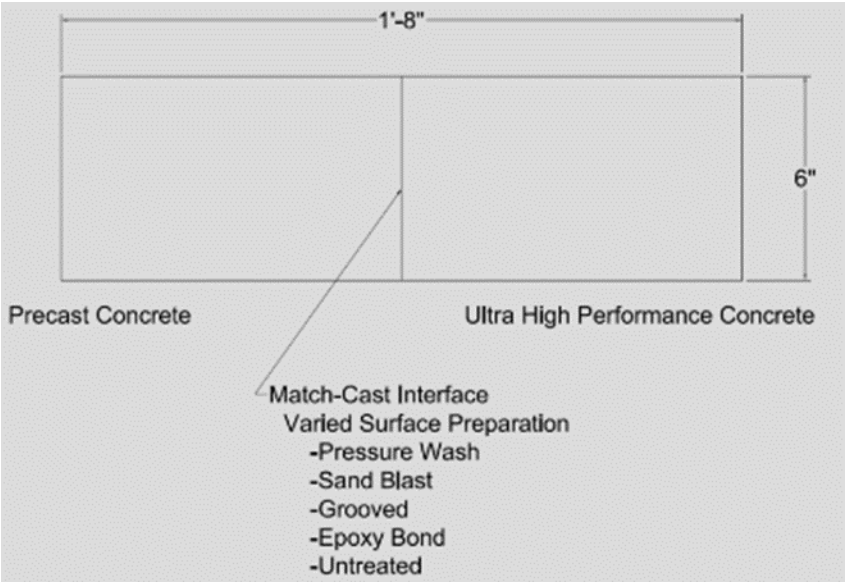

Iowa State University

Figure 16. Simulated MOR test specimen

The bond testing in the field was measured through instrumenting the HPC/UHPC bonds on the bridge deck and applying a live load via slowly driving a truck over the bridge at different locations on the deck.

The results of the study concluded the following about the HPC/UHPC bond (Phares et al. 2013):

- When no surface preparation is performed, there is essentially no bond between precast HPC and UHPC
- Under the conditions implemented on the test specimens, the surface preparation resulting in the best results was the 3,000 psi pressure wash
- The MOR average results for the bond were less than the MOR of the 5,000 psi compressive strength HPC, which implies the cracking will be at the UHPC and HPC interface
- Large variations in bond strength from sample to sample lead to the conclusion of variations in the development of the HPC/UHPC bond, no matter the surface preparation
- UHPC maturity was apparent due to the 7-day UHPC having the maximum bond strength, and then the strength decreasing over the 14- and 28-day UHPC. This implies the bond deterioration over time
- Strains recorded in the field measurements were less than the cracking strain for both the HPC and UHPC, which indicates cracking is doubtful at service load conditions
- Maximum field recorded strains across the HPC/UHPC interface were not consistent, which verifies bond inconsistencies
- The field recorded strains between the 2011 test and 2012 test were significantly different, with the latter being higher, which verifies the laboratory conclusion of bond deterioration over time

2.12 Strength, Durability, and Application of Grouted Couplers for Integral Abutments in ABC (2015)

This report was Phase I for the project of focus, hence the project had the same research objectives. Three specimens were tested to determine the strength, durability, and constructability of two proposed connections compared to a cast-in-place control specimen. The two proposed connections were: grouted reinforcing bar coupler (GRBC) (Figure 17) and pile couplers (Figure 18).

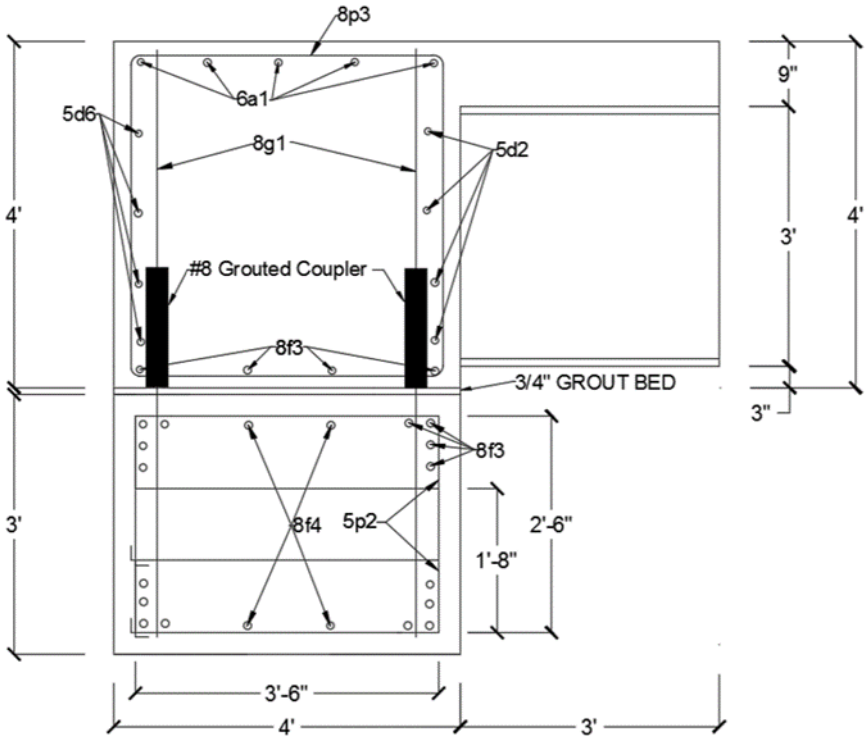

Iowa State University

Figure 17. Grouted reinforcing bar coupler

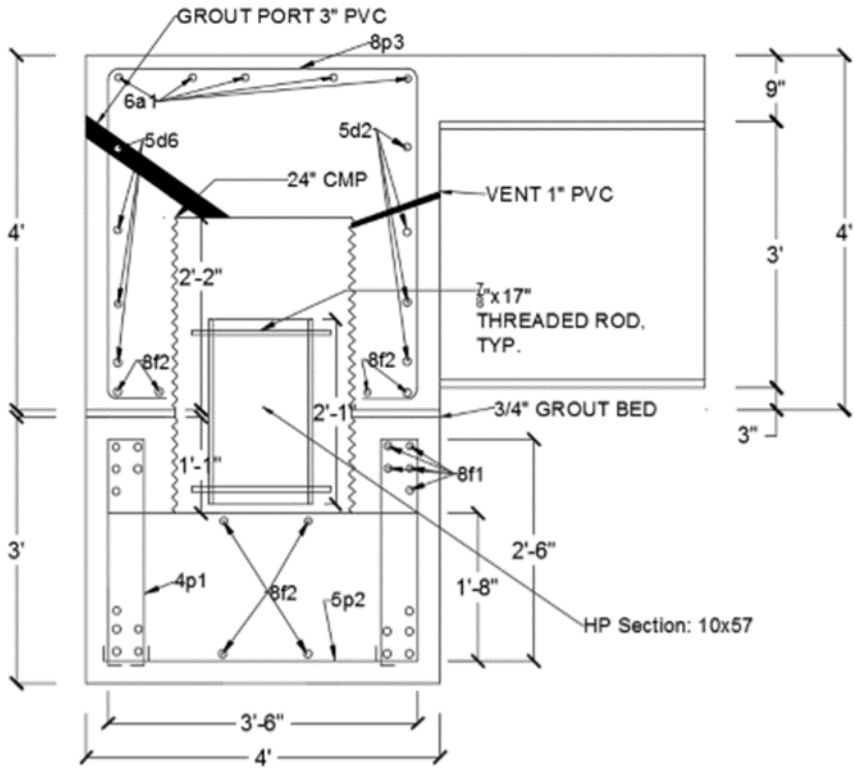

Iowa State University

Figure 18. Pile coupler

The design philosophy behind the two connections was:

- Grouted reinforcing bar coupler
    - Due to previous success with the connection, the need for a closure pour over the integral connection could be eliminated with the presence of the grout-filled mechanical couplers providing the integral connection through protruding reinforcing bars from one element being inserted into sleeves on the other element to be connected, and then filling the sleeve with a grouting material. The ABC application for this connection would likely be suspending the element via crane and placing it in the final location.
- Pile coupler
    - The basis of this design was the previous use of HP-sections being cast in grout within CMP voids in a precast pile cap. The HP-section would be suspended within a CMP void in a precast element and slid into place onto a precast pile cap with matching CMP void locations to receive half of the suspended HP-section. This void would then be filled with a grouting material just as the previously used precast pile cap/pile connection. This connection allows for the ABC application of “slide-in” construction and alleviates small tolerances that are present in the grouted reinforcing bar coupler connection.

Construction of the three specimens did not pose any significant challenges. The cast-in-place control specimen was erected by forming the steel reinforcement cage (Figure 19), and then simply pouring concrete.

Iowa State University

Figure 19. Cast-in-place specimen reinforcing cage

The grouted reinforcing bar coupler specimen had the pile cap cast with protruding reinforcing bars (Figure 20), utilized a match-casting procedure (Figure 21) to cast the sleeves for the connection in the integral diaphragm element, the integral diaphragm was placed on top of the pile cap via crane (Figure 22), and finally the sleeves were filled with grout to complete the connection.

Iowa State University

Figure 20. Grouted reinforcing bar coupler pile cap

Iowa State University

Figure 21. Grouted reinforcing bar coupler template used for match-casting

Iowa State University

Figure 22. Grouted reinforcing bar coupler connection placement

The pile coupler was constructed like the grouting reinforcing bar coupler, by having two elements cast with a part of the connection, but instead of protruding reinforcing bars and sleeves, each element had CMP voids. The integral diaphragm had a longer CMP void with the HP section being suspended within the void (Figure 23 and Figure 24), while the pile cap had CMP voids half the length of the HP section (Figure 25).

Iowa State University

Figure 23. Integral diaphragm CMP void for pile coupler

Iowa State University

Figure 24. Suspended HP section for pile coupler

Iowa State University

Figure 25. Pile cap CMP void for pile coupler

The elements were cast with the CMP voids and then placed together, then the HP-section was lowered into place via a pulley system, and then the CMP void was filled with grout to complete the connection.

To test the strength and durability of the connections, the specimens were tested in the structural laboratory with the setup shown in Figure 26.

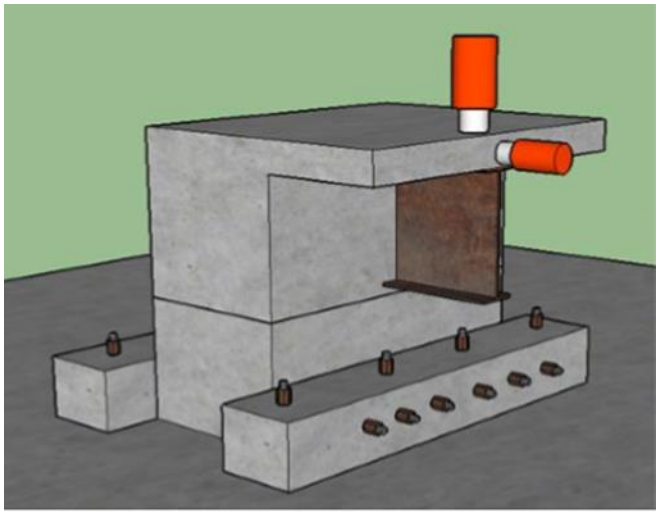

Iowa State University

Figure 26. Laboratory setup for integral abutment specimens

The actuators were placed on the specimen to resemble live and thermal loads typically induced on a bridge abutment. The horizontal actuator was set to apply a load of 100 kips onto the face of the steel beam to relate to loading seen from thermal contraction of the bridge superstructure,

while the vertical actuator was designed to apply a load of 400 kips to simulate both live loading on the abutment, as well as loading from thermal expansion.

The results of this study led to the following conclusions (Hosteng et al. 2015):

- Tight tolerances typically seen with grouted reinforcing bar couplers were alleviated through a match-casting procedure
- Strength and durability of the grouted reinforcing bar coupler specimen were similar to the cast-in-place control specimen. The crack width of the back face of the integral abutment was measured at the precast joint to be 0.035 in. for the grouted reinforcing bar coupler, and 0.019 in. for the cast-in-place control specimen, which means the grouting reinforcing bar coupler's resulting crack width was about 1.8 times greater than the control specimen
- Strength and durability of the pile coupler was less favorable than the grouted reinforcing bar coupler, with a crack width measured to be approximately 1.75 in., or about 92 times greater than the control specimen
- The constructability of the pile coupler was more ideal than the grouted reinforcing bar coupler simply due to the ability of the pile coupler allowing for the slide-in application of ABC, while the grouted reinforcing bar coupler would have to be suspended via crane and lowered into place
- Improvements to the pile coupler would be:
    - Increasing the length of the HP-section
    - Increasing the number of threaded rods/shear studs on the steel section
    - Increasing/revising the amount of reinforcing steel in the abutment
    - Using two HP-sections to act as a force couple

CHAPTER 3. ABC INTEGRAL ABUTMENT DESIGN

The basis of the designs listed in this section was on the concept of ABC, as well as the results from Phase I testing of the connections (Hosteng et al. 2015).

Through discussion of the results from the testing of two connections, the grouted reinforcing bar coupler and pile coupler; the designs of these specimens were adjusted to address any design or construction issues found from Phase I. In addition to the two modified connections, a new connection was developed by the Iowa DOT and finalized through meetings and discussions between the Iowa DOT and the Bridge Engineering Center. The connections were created based on ABC methods and the desire to eliminate a closure-pour to achieve a "jointless" bridge. Contractor-friendly construction methods and materials were a major driving force behind the designs, as were the strength and durability of each connection.

3.1 UHPC Joint

The Iowa DOT developed this connection to utilize the ABC method of "slide-in construction," and UHPC. UHPC was chosen in lieu of concrete or a grouting material due to the increased flowability characteristic of UHPC, as well as its impermeability and high strength. The placement of reinforcement throughout the specimen was based on the reinforcement of the grouted reinforcing bar coupler specimen from Phase I, except for the connection bars, which used 17 #7 reinforcing bars (Figure 27).

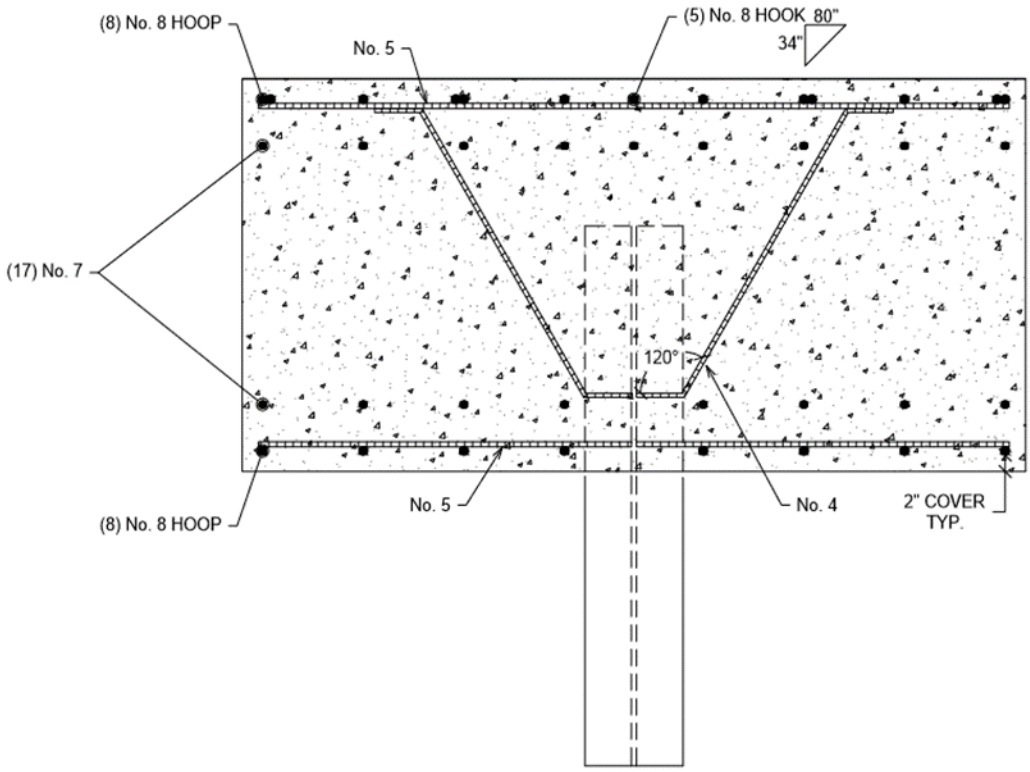

Figure 27. Plan view of UHPC joint specimen showing locations of connection bars

One of the initial design notes for this specimen was the eight #7 reinforcing connection bars on the front face of the pile cap of the specimen would need to utilize a mechanical coupler to eliminate the issue of the protruding bars from the pile cap interfering with the steel beam during the slide. These mechanical couplers were designed to be Dayton Superior D310 Taper-Lock Standard Couplers, which were chosen over other couplers due to ease of installation in the tight space while maintaining acceptable strength and durability. Another design note was to create two 7 in. wide “chimneys” along the rear face of the integral diaphragm, which was to create a pressure head to aid the flowability of the UHPC (Figure 28).

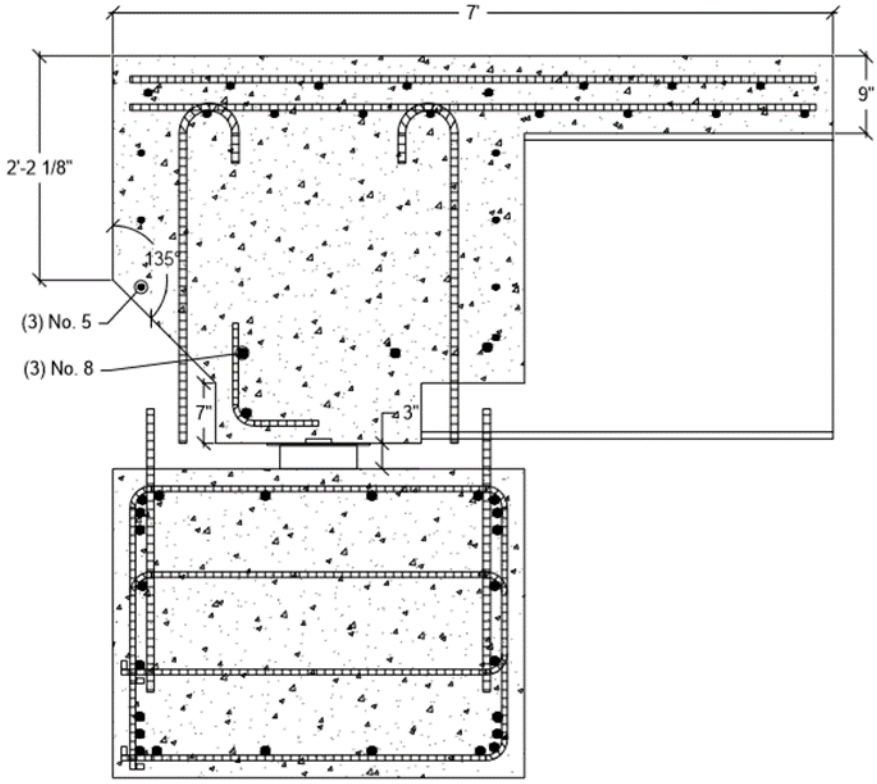

Figure 28. UHPC joint specimen section through "chimney"

The overall size of the specimen does not vary in size from the other two specimens, except for the height of the integral diaphragm, since the "grout-bed" for this specimen is 3 in., instead of the ¾ in. grout bed seen in the other two specimens. To maintain the overall height of the specimen, the height of the integral diaphragm is decreased (Figures 29 and 30), and is governed by the concrete cover of the steel bearing plate and beam.

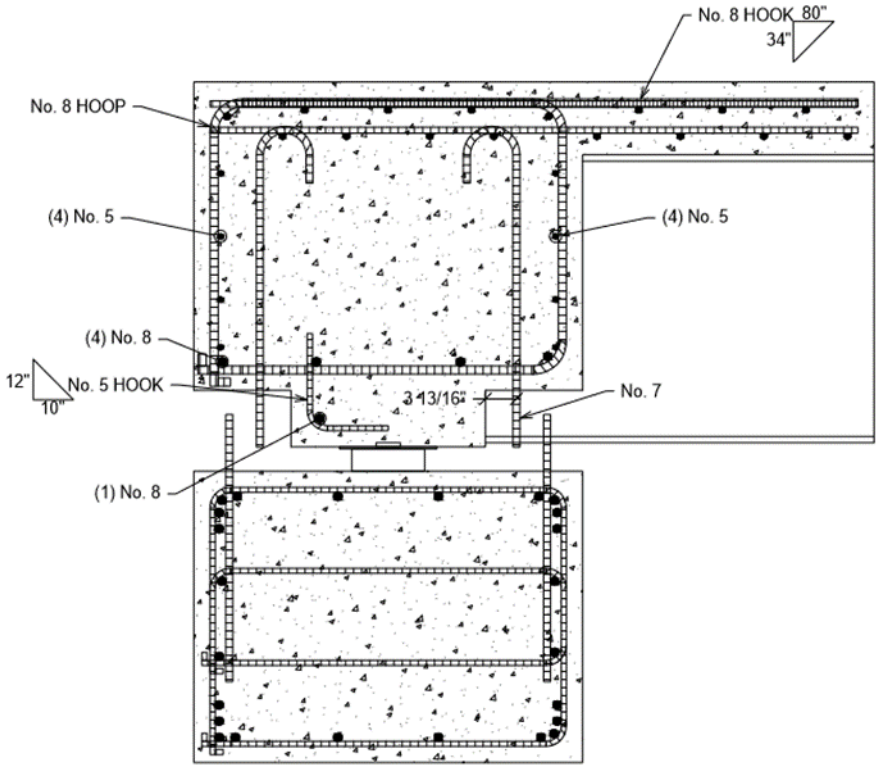

Figure 29. UHPC joint specimen section view

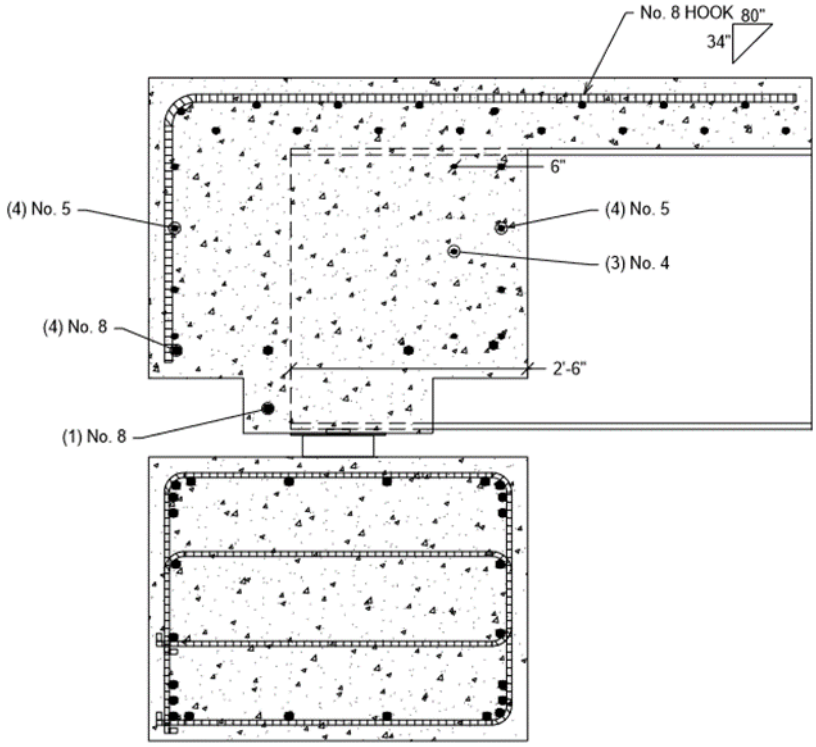

Figure 30. UHPC joint specimen section view through beam

Note the steel bearing plate under the beam, the steel sliding shoe under the bearing plate, and the neoprene pads under the sliding shoe

The UHPC joint specimen would utilize the ABC application of "slide-in construction," using laminated neoprene pads with Teflon and stainless-steel sliding "shoes" (Figure 31).

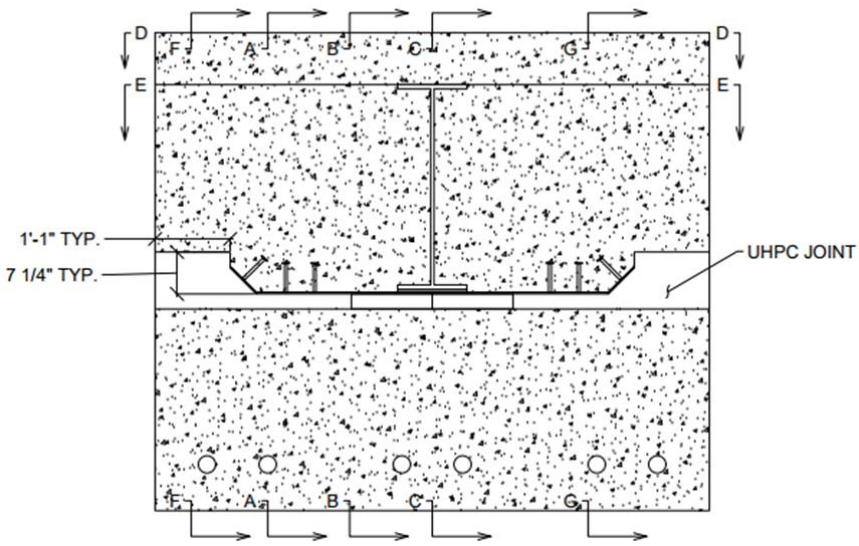

Figure 31. UHPC joint specimen front view showing "sliding shoes" and pads

When the specimen is slid into its final position, the eight #7 mechanical couplers will be installed per manufacturer's instructions into the pile cap at the designed locations. Formwork will then be set for the installation of the UHPC to fill the joint and will be let to cure for the specified time per design. After the design strength of the UHPC has been met, formwork shall be removed, and this integral abutment connection is complete.

One initial concern from the design team for this connection was the ability for the UHPC to fill the entire joint without leaving voids, specifically on the front face interior corner of the joint "key." This issue was to be tested through a UHPC-flowability test, which was designed to simulate the proposed cross section (Figure 32), as well as a modified version (Figure 33), of the joint and installation procedure.

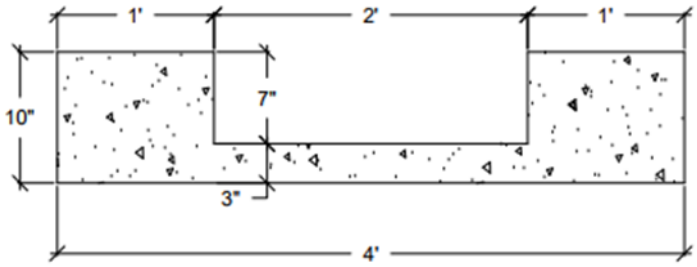

Figure 32. UHPC-flowability test design proposed cross section

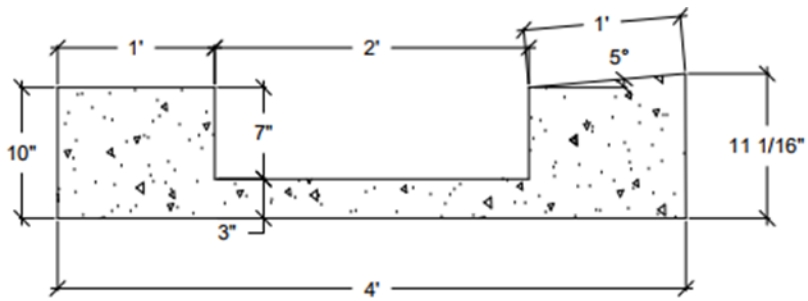

Figure 33. UHPC-flowability test design modified cross section

The modified cross section was to investigate the result of adding a 5° rise to aid in the removal of air. The section was designed to be 2 ft wide with the 7 in. "chimney," and be constructed out of metal and wood to provide proper formwork and support for the UHPC (Figure 34).

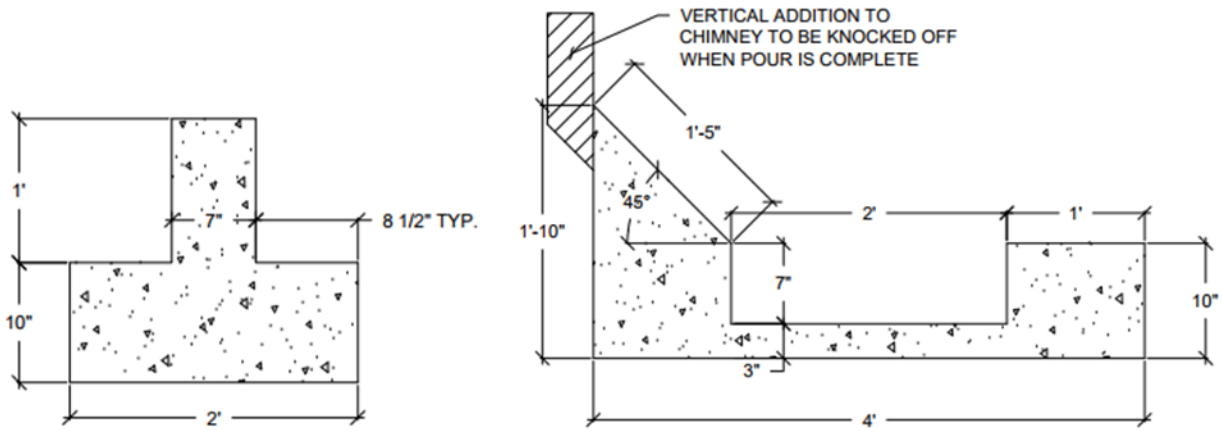

Figure 34. UHPC-flowability test setup design "chimney" cross section

After the UHPC had cured, the form was to be removed and observations of the final cross section were to be made as to see how well the UHPC had filled the form.

3.2 Grouted Reinforcing Bar Coupler

The design of this specimen was based on the design from the Phase I testing of the connection, with the only difference between the two phases being a reduction in the number of grouted reinforcing bar couplers. Phase I had 17 couplers, while Phase II only has 8 (Figure 35).

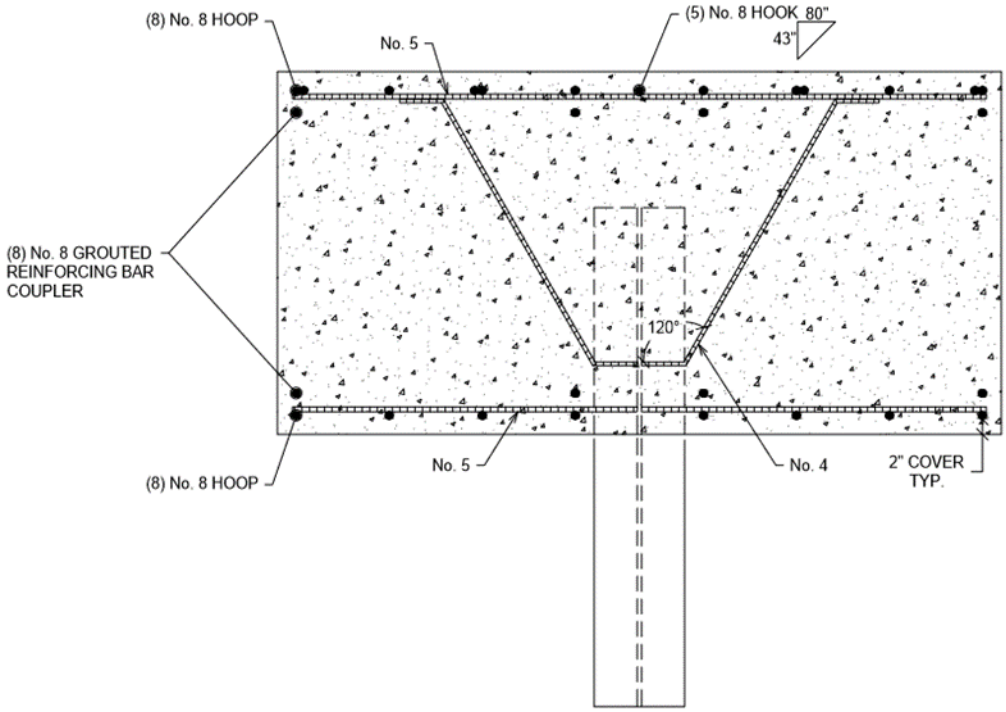

Figure 35. Plan view of grouted reinforcing bar coupler showing locations of couplers

This reduction comes from the results of Phase I testing of the connection that is similar to the cast-in-place (control) specimen tested in Phase I, specifically having a final crack at the back face from vertical loading of only 0.035 in. This crack was approximately 1.8 times the crack of the cast-in-place specimen, so a reduction in the number of couplers could be made to potentially simplify the construction due to a tolerance gain with the reduction of couplers.

The design of the couplers is the same as the couplers used in Phase I, being the couplers were designed to be #8 epoxy-coated reinforcing bars with Dayton Superior D410 Sleeve-Lock Grout Sleeves filled with Dayton Superior D490 Grout (Figure 36).

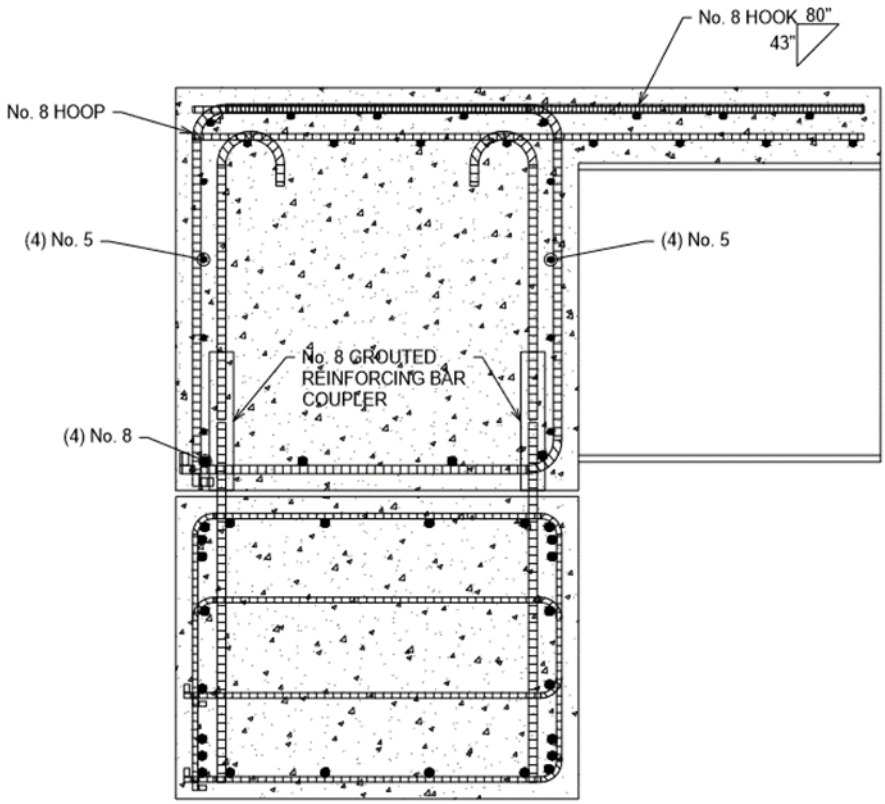

Figure 36. Grouted reinforcing bar coupler section view through couplers

The overall size of the specimen and the distribution of the reinforcement is the same design as seen in Phase I, which was done to eliminate variances in design other than the couplers (Figures 36 and 37).

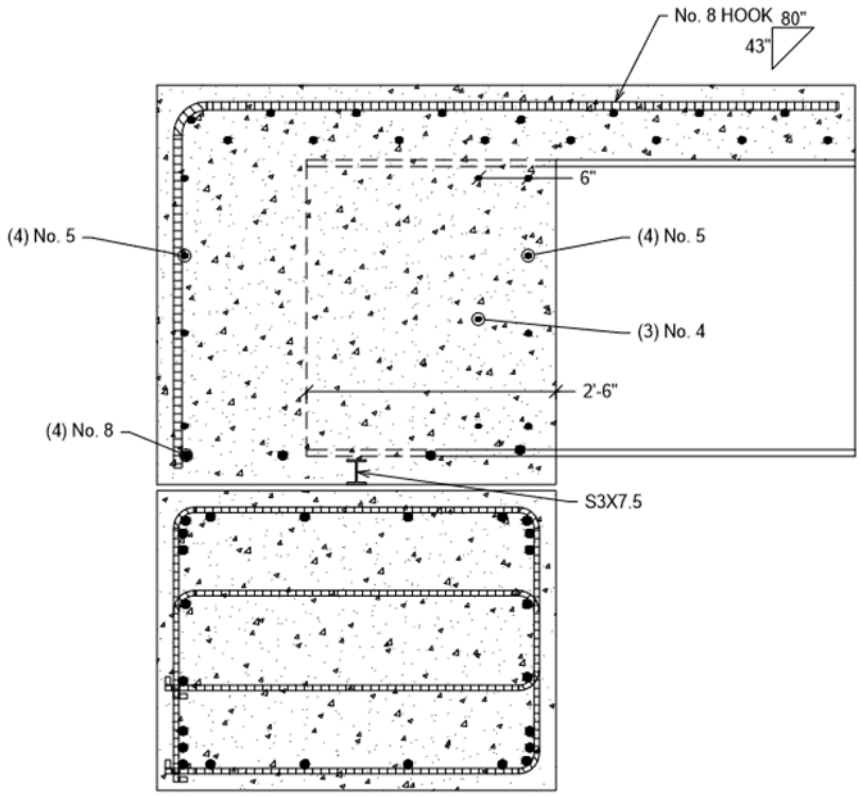

Figure 37. Grouted reinforcing bar coupler section view through beam

The grouted reinforcing bar coupler specimen would not be able to utilize slide-in ABC methods without jacking up the diaphragm due to the coupler bars protruding from the pile cap, which cannot be modified due to the design of the couplers themselves. This installation method is possible but another, and possibly preferred, installation method would be using a crane to suspend the diaphragm over the pile cap and lowering it to insert the reinforcing bars into the grout sleeves. Either way, after the protruding bars from the pile cap have been inserted into the grout sleeves of the diaphragm, the sleeves would then be filled with grout to complete the construction of this integral abutment connection.

3.3 Pile Coupler

This specimen was designed per Phase I design, and recommendations made after the results of testing. The Phase II pile coupler specimen uses the concept of the piles being the connection through the CMP voids being filled with a grouting material, but this design has four HP8X36 couplers acting as a force couple instead of having only two HP10X57 couplers at the center of the diaphragm/pile cap as Phase I did (Figure 38).

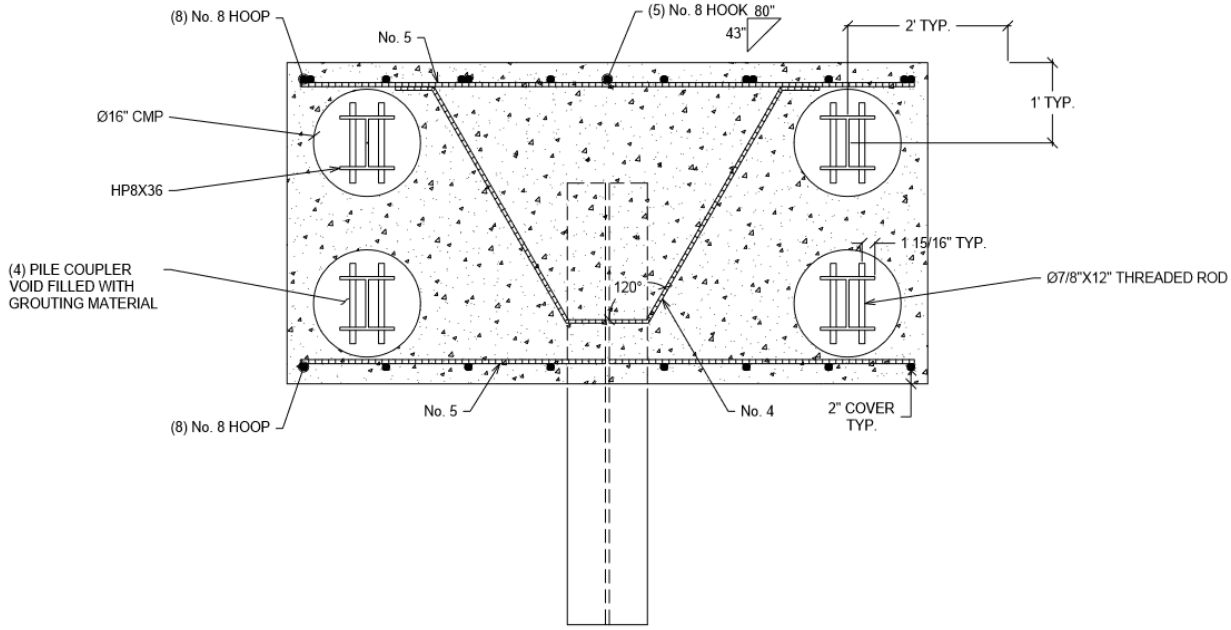

Figure 38. Plan view of pile coupler showing locations of couplers

The couplers have the same premise as the Phase I couplers did, which is having the HP-sections suspended within the CMP void in the diaphragm and being lowered via a pulley system created with a U-bolt being attached to a lid on the CMP and feeding a wire holding the section through the U-bolt up through the 1 in. polyvinyl chloride (PVC) vent pipe. Then, with the HP-section lowered into place, half within the CMP void in the pile cap and half within the CMP void in the diaphragm, a grouting material will fill the CMP voids through a 3 in. PVC grout port until the grout comes out entirely through the vent pipe and grout port, meaning that the void is filled to maximum capacity and has encased the HP-sections, and threaded rods for additional connectivity (Figure 39).

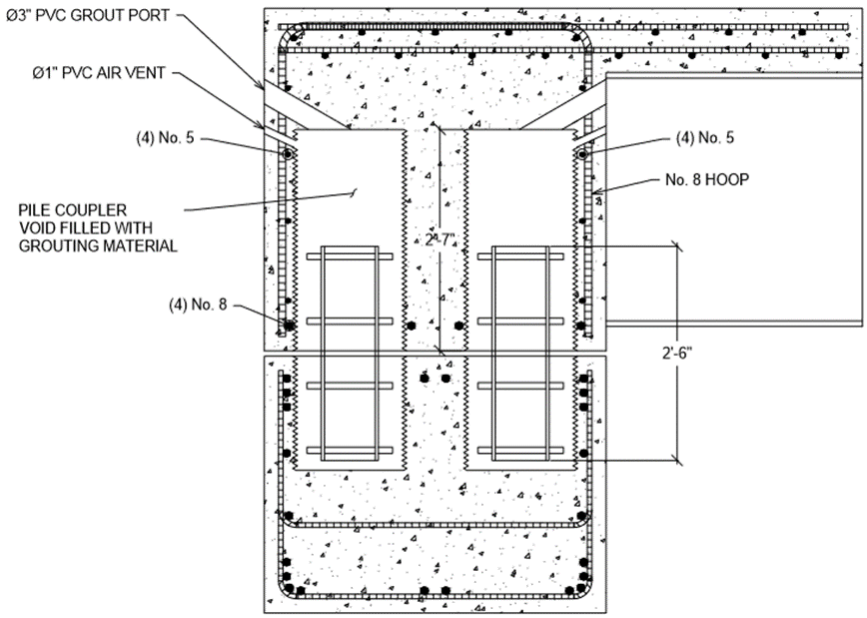

Figure 39. Pile coupler section view through couplers

The overall size and reinforcement distribution of the pile coupler specimen are the same as the Phase I design, which was done to eliminate any variances other than the couplers (Figure 40 and 41).

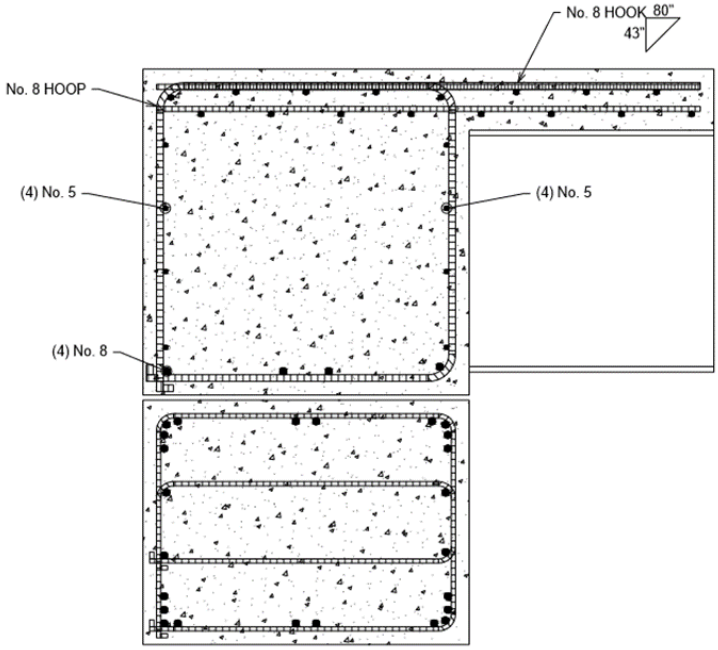

Figure 40. Pile coupler section view

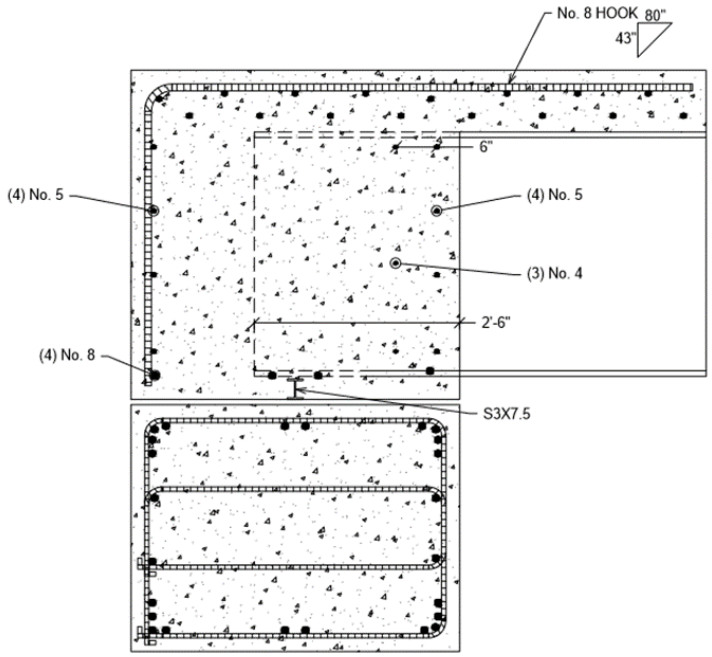

Figure 41. Pile coupler section view through beam

The installation procedure for this specimen would be the slide-in ABC method. Since the CMPs would be near flush with the concrete surfaces and the HP-sections would be suspended within the diaphragm's CMP voids, sliding the diaphragm into place on top of the pile cap should not pose any issues. After the slide is complete, the HP-sections would be lowered, and the CMP voids would be filled with a cementitious material, which would complete this integral abutment connection.

CHAPTER 4. CONSTRUCTION

4.1 UHPC Joint

4.1.1 Pile Cap

Construction of the specimen began with the pile cap. A reinforcing cage was erected following the design drawings (Figure 42).

Figure 42. UHPC joint pile cap reinforcing cage

Multiple checks were done to ensure the protruding bars were at their designed locations, specifically in respect to elevation to ensure the 8 in. protrusion required for proper development in the UHPC filled joint. Also, the D310 threaded couplers had to be checked to ensure the tops would be flush with the top of the concrete when complete.

With the cage complete, formwork for the pile cap was erected and the cage was then placed inside (Figure 43).

Figure 43. UHPC joint pile cap formwork

Since a process referred to as “match-casting” was to be done to align the PVC ducts to the reaction blocks, the blocks were utilized as formwork in addition to the EFCO steel formwork. With the cage set in the forms, checks were done to ensure the 2 in. concrete cover required per design were going to be met, all reinforcement was secured and installed as the designed locations, and the formwork was properly fastened.

Concrete from a local ready-mix plant in Ames, Iowa, was cast in the formwork using materials in the Structural Engineering Research Laboratory at Iowa State University. Electric concrete vibrators were used to make sure the concrete was encasing the cage and filling the form to maximum capacity. The surface was given a roughened finish to ensure a 1/4 in. amplitude, which is required by the Iowa DOT, by roughly brushing with a stiff-bristled broom in multiple directions (Figure 44 and 45).

Figure 44. UHPC joint pile cap cast in concrete

Figure 45. UHPC joint pile cap completed

Also, the surface was removed where concrete was covering the tops of the D310 threaded couplers.

Issues/Recommendations

- Not all coupler bars resulted in the required 8 in. protrusion after casting concrete
    - Add more “double-ties” to coupler bars to ensure no movement of coupler bars

4.1.2 Integral Diaphragm

The initial step for constructing the integral diaphragm for the UHPC joint specimen was to conduct the flowability test of the UHPC in the proposed cross section. A decision was made by the design team to negate the initial cross section, and test only the 5° rise cross section (Figure 46).

Figure 46. UHPC flowability test formwork

The UHPC mix produced by Ductal from Lafarge was used as the UHPC material for this project, and the mix proportions used were that of the Special Provisions document by the Iowa DOT for ultra–high performance concrete (Iowa DOT 2014). The flowability quantity of approximately 5.11 ft^3 was designed to fill the test section, fill multiple testing cylinders, and account for the material loss. The section was filled and left to cure for three days, at which point the formwork was stripped to analyze the adequacy of the flowability of the UHPC (Figure 47).

Figure 47. UHPC flowability test completed

As shown in Figure 47, it is apparent that the UHPC material successfully filled the entirety of the cross section without any issues of voids caused by the volume of air. With this knowledge, the formwork for the integral diaphragm could be constructed through multiple ¾ in. plywood diaphragms fastened together, which had the same dimensions used for the flowability test section (Figures 48 through 50).

Figure 48. UHPC integral diaphragm formwork top view of diaphragms

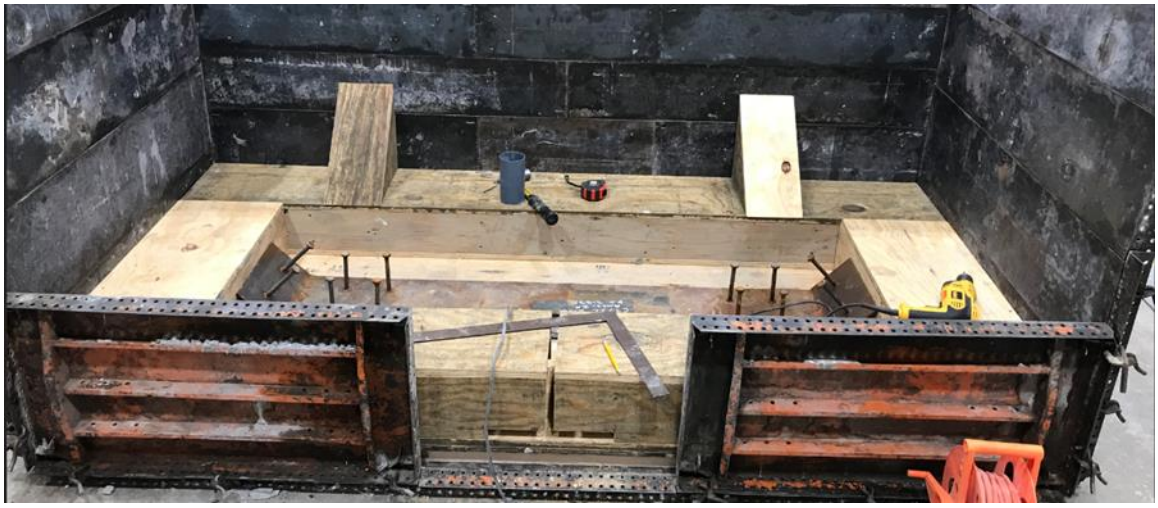

Figure 49. UHPC integral diaphragm bottom formwork completed

Figure 50. UHPC integral diaphragm bottom formwork side view

With the bottom formwork completed, the reinforcement cage was erected. One important note was to ensure the 17 coupling #7 bars would protrude through the bottom plywood formwork by 1 in. to ensure the bars would protrude through the bottom of the section at the required 8 in. (Figures 51 and 52).

Figure 51. UHPC integral diaphragm reinforcement cage

Note the coupler bars passing through the plywood formwork.

Figure 52. UHPC integral diaphragm reinforcement cage completed

Also, the design drawings called for the sliding shoe to protrude from the bottom of the integral diaphragm, but this was not done for the specimen in the laboratory. The purpose of this protrusion is to prevent any concrete catching on the laminated neoprene pads with Teflon during the actual slide of the bridge but no slide would be done in the laboratory, instead, the diaphragm was to be lifted into place by crane. Therefore, to simplify formwork in the laboratory, the sliding shoe was not protruding from the bottom of the diaphragm. To create the best bond surface for the UHPC and precast concrete interface, a form retarder needed to be applied to the bottom formwork of the integral diaphragm. To apply the form retarder (Figure 53), it was decided to use a paint roller and brush to ensure the form retarder would be applied to the entirety of the formwork, while not being applied to any reinforcing bars (Figures 54 and 55).

Figure 53. Form retarder to be applied to integral diaphragm formwork

Figure 54. Form retarder being applied to integral diaphragm formwork

Figure 55. Form retarder application completed

With the form retarder applied and final checks done to the formwork, the integral diaphragm was cast in concrete (Figure 56).

Figure 56. UHPC integral diaphragm cast in concrete

The formwork was stripped, and the integral diaphragm was inspected, and it was noted that concrete did not pass underneath the beam as intended, and the coupler bars did not have consistent protruding lengths from the bottom of the section (Figure 57).

Figure 57. UHPC integral diaphragm completed

To finish the required bottom-side finish for the integral diaphragm, a 3,000-psi power wash was used to spray off the form retarder and leave an exposed aggregate finish (Figure 58).

Figure 58. UHPC integral diaphragm exposed aggregate finish

Issues/Recommendations

- Variation of protruding length for coupler bars
    - Add more "double-ties" to coupler bars to ensure no movement of coupler bars and check protruding length for each bar
- Bottom of the beam was not completely cast in concrete
    - Ensure to do additional vibrating around the beam to allow for movement of concrete
- #5 hooks behind the beam to hold #8 longitudinal bar did not stay in place
    - Revise this area of reinforcement, specifically how to tie the #5 hooks to the rest of the cage
- #7 coupler bars were not easily tied to reinforcing cage
    - Revise length of coupler bars, or orientation, to ensure proper areas to tie bars to rest of reinforcing cage

4.1.3 Connection

The integral diaphragm was craned over to the test area where the pile cap was installed and ready for the connection. Since this connection would utilize the ABC method of "slide-in" construction, a slide had to be simulated to ensure the protruding bars on the back side of the abutment would have proper clearance during the installation process. The integral diaphragm was suspended just over the neoprene pads enough to allow for movement, the slide was simulated, and the clearance of the rear bars was proven to be adequate (Figure 59).

Figure 59. UHPC joint rear connection bars with adequate clearance

After the integral diaphragm was placed in its final location, the threaded bars on the front side of the specimen were installed. One concern was the available space to insert the bar into the threaded coupler in the pile cap and be able to properly tighten the bar, but this was proven to be done without any issues (Figure 60).

Figure 60. Front connection bars with installed threaded bars in pile cap

With the connection bars properly installed, the joint formwork was erected. This formwork included ports along the side and front faces to allow for air to be pushed out by the UHPC during the install, and a spout and chimney system to allow for a simplified installation of the material into the joint from the mixer (Figures 61 through 63).

Figure 61. Front face joint formwork with air ports

Figure 62. Rear face joint formwork with chimneys

Figure 63. Spout and chimney system for installation of UHPC material

The UHPC material, Ductal by LaFarge, had to be installed in five batches due to the equipment available in the structures laboratory, and each batch took approximately 30 minutes to mix and then pour into the joint. This caused issues with the casting of the joint since each batch set up too quickly to allow for the batch being cast to flow into the previous batch, which caused layers of material within the joint instead of one layer of material (Figure 64).

Figure 64. Completed UHPC joint showing the multiple layers of material

Issues/Recommendations

- UHPC layers due to installing material in multiple batches
    - Have construction procedures and equipment available to install the UHPC joint in one large batch instead of multiple batches, which should allow the material to flow as it did in the flowability test

4.2 Grouted Reinforcing Bar Coupler

4.2.1 Pile Cap

Construction of the specimen began with the pile cap. A reinforcing cage was erected following the design drawings (Figure 65).

Figure 65. GRBC pile cap reinforcing cage

Multiple checks were done to ensure the protruding bars were at their designed locations, specifically in respect to elevation to ensure the 8 in. protrusion required for proper development in the grout sleeves.

With the cage complete, formwork for the pile cap was erected and the cage was then placed inside (Figure 66).

Figure 66. GRBC pile cap formwork

Since a process referred to as “match-casting” was to be done to align the PVC ducts to the reaction blocks, the blocks were utilized as formwork in addition to the EFCO steel formwork. With the cage set in the forms, checks were done to ensure the 2 in. concrete cover required per design were going to be met, all reinforcement was secured and installed at the designed locations, and the formwork was properly fastened.

Concrete from a local plant was cast in the formwork using materials in the Structures laboratory at Iowa State University. Electric concrete vibrators were used to make sure the concrete was encasing the cage and filling the form to maximum capacity. The surface was given a roughened finish by brushing with a stiff-bristled broom along the long direction (Figure 67).

Figure 67. GRBC pile cap completed

Issues/Recommendations

- No significant issues

4.2.2 Integral Diaphragm

To properly align the protruding bars to the grout sleeves, match-casting was used to set the locations of the grout sleeves. Using a full 4 ft x 8 ft x 3/4 in. sheet of plywood, the Dayton Superior D492 Sleeve-Lock form plugs (Figure 68) were installed to hold the grout sleeves in place during erection of the GRBC integral diaphragm.

Figure 68. Dayton Superior form plug

The plywood was placed on top of the pile cap and ensured that it was square with the pile cap. Then, marks were placed on the plywood where the protruding bars were located, and those marks were then drilled with two different drilling bits. A 1 in. diameter spade bit was used to cause the nuts and washers of the form plug to be recessed in the plywood so that the bottom surface would be flat, and a 7/16 in. diameter twist drill bit was used to make holes in the plywood for the form plug bolt to pass through (Figure 68 middle).

The form plugs were installed and tightened, with a 14-mm socket, enough to allow for the grout sleeves to be placed and turned to have the port plugs facing the designed locations, which were out the front and back faces of the integral diaphragm. When the position of the sleeves was verified, the form plugs were tightened until the sleeves would not turn, and the Dayton Superior D487 seal plugs were placed on the tops of the grout sleeves (Figure 69).

Figure 69. Dayton Superior grout sleeves match-casted topped with seal plugs

The bolts of the form plugs were cut to be flush with the plywood surface, and then the match-casted formwork was placed down to begin the formwork for casting the integral diaphragm in concrete (Figure 70).

Figure 70. GRBC reinforcing cage with Dayton Superior grout sleeves

With the grout sleeves and steel beam set in their designed places, the reinforcing cage was erected, and formwork was placed. Steel forms made up most of the formwork, but custom woodwork was required to adequately provide formwork for the area around the beam. Finally, the integral diaphragm was encased in concrete (Figures 71 through 73).

Figure 71. GRBC reinforcing cage

Figure 72. GRBC integral diaphragm formwork

Figure 73. GRBC integral diaphragm completed

When the GRBC integral diaphragm was stripped from the formwork, the grout sleeves and ports were checked to ensure there was no concrete blocking any holes. All eight sleeve bottoms were open, and all the ports for the sleeves were located (Figure 74).

Figure 74. GRBC grout sleeve ports located post concrete casting

Issues/Recommendations

- Had to adjust reinforcing cage sightly to accommodate grout sleeve ports
    - Shifted reinforcement and redlined design drawings
- One port was not at the concrete surface after casting, so chipping away of concrete was required to locate it
    - Ensure all ports are long enough to extend to slightly beyond formwork

4.2.3 Connection

After the pile cap was set in place for testing, the integral diaphragm was lowered into position. A dry fit was done to make sure all the protruding bars and grout sleeves were in alignment, and all eight connections lined up without any issues (Figure 75).

Figure 75. GRBC connection alignment

To create the 3/4 in. gap between the pile cap and integral diaphragm for the grout bed, 3/4 in. neoprene pads were installed. These pads were cut to be larger than the grout sleeve opening, and have a hole in the middle for the protruding bar. To ensure a seal around the neoprene pads and grout sleeves, silicone was placed around the neoprene pads and dispersed when the integral diaphragm was installed (Figure 76).

Figure 76. GRBC 3/4 in. neoprene pad and silicone seal

Next, the formwork for the grout bed was erected, and Dayton Superior D490 grout mix was pumped into various ports within the formwork with a grout pump (Figure 77).

Figure 77. Grout pump

Port plugs were installed into ports when the grout would begin to seep out until the entirety of the bed was filled with grout and all ports were plugged (Figure 78).

Figure 78. GRBC grout bed completed

One important note was to ensure the lower port for the grout sleeves was plugged so no grout from the grout bed would enter the port.

The formwork was removed after the grout bed had set, then the eight grout sleeves were filled with the Dayton Superior grout mix. After the sleeves were verified to be clear of debris, the pump hose was placed into the lower port and grout was pumped so that the grout was seeping out of the top port, then both ports were plugged (Figure 79).

Figure 79. GRBC grout sleeve completed

This procedure is meant to ensure that the air within the sleeves is pushed out by the grout and properly encasing the coupling bars.

Issues/Recommendations

- Dayton Superior D490 Grout-Mix was slightly plastic after mixing per specifications
    - Added water until a flowable consistency was achieved

4.3 Pile Coupler

4.3.1 Pile Cap

Construction of the specimen began with the pile cap. A reinforcing cage was erected following the design drawings (Figure 80).

Figure 80. Pile coupler pile cap reinforcing cage

Multiple checks were done to ensure the corrugated metal pipes (CMPs) were in the proper locations, specifically that the tops of the CMPs would be flush with the top surface of the pile cap. The CMPs were installed into the reinforcing cage using salvage rebar to set the elevation (Figure 81), and metal wire to set the locations (Figure 82).

Figure 81. Salvage reinforcing steel bar holding up CMPs

Figure 82. Metal wire holding CMPs in designed locations

To keep the concrete from flowing to the inside of the CMPs, a plug was constructed by using a circle of plywood cut to the inside diameter of the CMP, cut in half to allow for pullout when casting is complete, and a 2 in. x 4 in. piece of plywood holding the two halves together (Figure 83).

Figure 83. CMP plug

With the cage complete, formwork for the pile cap was erected and the cage was then placed inside (Figure 84).

Figure 84. Pile coupler pile cap formwork

Since a process referred as “match-casting” was to be done to align the PVC ducts to the reaction blocks, the blocks were utilized as formwork in addition to the EFCO steel formwork. With the

cage set in the forms, checks were done to ensure the 2 in. concrete cover required per design were going to be met, all reinforcement was secure and installed at the designed locations, and the formwork was properly fastened.

Concrete from a local plant was cast in the formwork using materials in the Structures laboratory at Iowa State University. Electric concrete vibrators were used to make sure the concrete was encasing the cage and filling the form to maximum capacity. The surface was given a roughened finish by brushing with a stiff-bristled broom along the long direction (Figure 85).

Figure 85. Pile coupler pile cap completed

After the concrete had cured, the formwork was removed, and the plugs were taken out of the CMPs (Figure 86).

Figure 86. CMP void completed

Issues/Recommendations

- CMP movement during the concrete pour
    - Additional metal wire tieing the bottom of the CMP to the reinforcing cage
- One CMP plug blew out and let concrete come up in the void
    - Additional weight added to plug
    - Avoid using vibrator near CMP bottoms causing concrete to rapidly move upward

4.3.2 Integral Diaphragm

Plywood circles were made to align the CMPs in the integral diaphragm to be aligned with the CMPs of the pile cap (Figure 87).

Figure 87. Plywood alignment of integral diaphragm CMP

The CMP lid was fabricated using a circular steel plate that was fabricated to have the 3 in. duct to install the cementitious material into the CMP void, four reinforcing steel bars to act as guides for the steel sections to be encased within the CMPs, and a U-bolt that would act as a pulley system for the wire to raise and lower the steel section within the CMP voids. The wire would pass through the 1 in. duct installed at the top of the CMP just below the lid, and this duct also acts as an air-port to allow all air within the voids to be forced out when the cementitious material is installed (Figures 88 through 90).

Figure 88. CMP lid with accessories

Figure 89. Bottom view of CMP void

Figure 90. CMP ducts against formwork

The ducts for the specimen constructed in the laboratory were designed to surface at the sides of the specimen, opposed to the design details requiring the ducts to surface at the front and back faces, to make the installation of the cementitious material easier with the equipment available in the laboratory. Larger equipment available to contractors would allow for the ducts to be on the front and back faces, since having the surface of the duct at the sides of the real-world application would not be possible due to multiple sections being adjacent to each other, which would prevent the installation of the cementitious material.

To ensure the CMPs would not shift upwards when casting the integral diaphragm, a “locking” mechanism was installed within the reinforcement cage. This mechanism consisted of using salvage reinforcing steel bars to span across the CMP lids to be tied to other reinforcing bars, which were then tied to the reinforcement cage (Figure 91).

Figure 91. CMP "locking" reinforcing steel bar

With the CMPs, and accessories, and steel beam set in their designed places, the reinforcing cage was erected, and formwork was placed. Just as the GRBC specimen, steel forms made up most of the formwork, but custom woodwork was required to adequately provide formwork for the area around the beam. Finally, the integral diaphragm was encased in concrete (Figures 92 and 93).

Figure 92. Pile coupler reinforcement cage

Figure 93. Pile coupler integral diaphragm completed

When the formwork was stripped from the completed pile coupler integral diaphragm, a few of the 1 in. ducts had to be found through chipping away of concrete, but all of the 3 in. ducts and CMP voids had successfully surfaced (Figures 94 and 95).

Figure 94. Surfaced 3 in. duct and 1 in. duct found after chipping concrete

Figure 95. Surfaced CMPs

Issues/Recommendations

- Three of four 1 in. CMP ducts did not appear at the concrete surface after casting, so chipping away of concrete was required to locate it
    - Ensure all ports are long enough to extend slightly beyond formwork

4.3.3 Connection

The design of the steel sections was revised from having four lines of threaded rods along the length of the section, to have two rows of shear studs on each face of the web along the length of the section (Figure 96).

Figure 96. Steel section coupler with shear studs

This was done on the basis of the studs being able to cause the axial development of the sections as the threaded rods would, but would also simplify the fabrication.

Steel wire was used to suspend the steel sections within the CMP voids in the integral diaphragm during the installation of the diaphragm, and then the sections were lowered into the CMPs in the pile cap after the diaphragm was in position (Figure 97).

Figure 97. Steel sections suspended within integral diaphragm CMPs

The CMPs were filled with a self-consolidating concrete (SCC) mix from a local plant, which had an 18-in. spread (Figure 98).

Figure 98. SCC 18-in. spread

The SCC was installed by using a barrel with a funnel, as well as dumping with buckets (Figure 99).

Figure 99. Barrel with funnel to install SCC

The SCC was installed through the 3 in. ducts until filled, and also the 1 in. duct was plugged when material began to flow through it (Figures 100 and 101).

Figure 100. SCC installed through 3 in. duct

Figure 101. SCC completed install with 1 in. duct plugged and 3 in. duct filled

The 3/4 in. grout bed was created by using 3/4 in. thick nuts to create the required gap. To ensure a seal around the CMP voids, 1 in. insulation foam rings were glued around the pile cap CMP voids, which would compress when the diaphragm was installed. Formwork similar to the GRBC grout bed formwork was erected and a non-shrink grout complying to Iowa DOT standards (Figure 102) was installed using the grout pump and procedure used for the GRBC grout bed (Figure 103).

Figure 102. Non-shrink grout used for pile coupler grout bed

Figure 103. Pile coupler grout bed completed

Issues/Recommendations

- SCC aggregate consolidated to the bottom of the barrel with funnel when installing, and bucketing material had to be done to finish the install
    - Avoid using equipment that would allow for settlement of SCC aggregate
    - Add water to SCC to cause larger spread, and higher flowability
- Reinforcing steel bar guides for steel sections were too close to edges of web and flanges, preventing the sections from being completely suspended within CMP voids
    - Revise design of guides to avoid this “pinching” issue

- Steel wire would not move smoothly through pulley system when attempting to shift steel sections within CMP voids
    - Use material other than steel wire to suspend sections
    - Use a pulley wheel in place of the U-bolt to be the pulley system to shift the steel sections in the CMP voids

CHAPTER 5. LABORATORY TESTING

5.1 Methodology

The setup for testing the strength and durability of the three integral abutment connection details required the construction of two reaction blocks to attach the specimens to the strong floor of the structural laboratory with post-tensioning, causing the specimens to have a fully-fixed boundary condition (Figures 104 through 106).

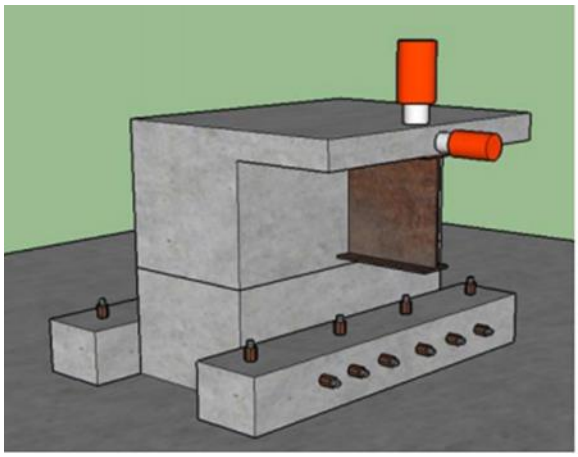

Figure 104. Model of testing setup - front view

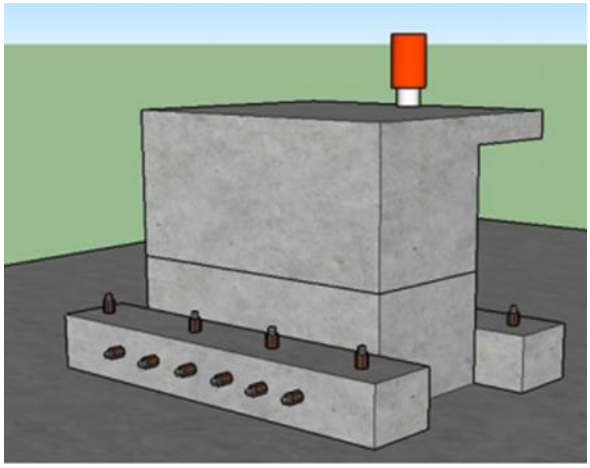

Figure 105. Model of testing setup - rear view

Figure 106. Laboratory testing setup

Actuators and load frames were used to apply two loads onto the specimens to simulate thermal loads and live loads, which tested the strength and durability of the three integral abutment connection details, as well as the adequacy of the design of the precast segments of the specimens. The analysis for strength and durability of the connection details would be conducted by only static loading and observing the structural responses of the specimen, specifically the magnitude of the crack widths between the precast segments and the stresses of coupling materials. The values recorded would then be presented and compared to the Phase I results of the same testing procedures.

The fixed boundary condition applied to the specimens through the reaction blocks and post-tensioning caused the specimens' structural response to be a worst-case scenario for the connection details. This is apparent since in the field application of the details, translations and rotations of the integral abutment would be present due to the flexibility of the driven piles connected to the pile cap as well as the girders connected to the integral diaphragm.

Two static loads were applied to the specimens, the first was a horizontal load meant to cause tension on the front face of the abutment, and the second was a vertical load to cause tension at the rear face of the abutment. The horizontal load was to simulate thermal contraction of the integral abutment bridge, while the vertical load was to simulate thermal expansion of the bridge as well as live loading. Both load cases, and how the structure response should be, are shown in Figures 107 through 109.

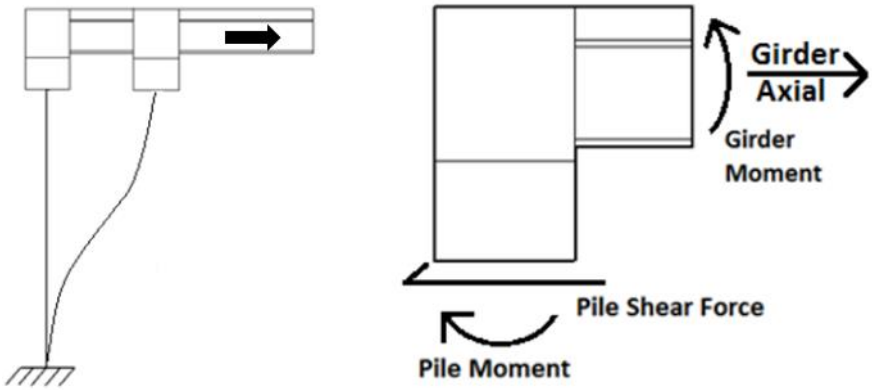

Figure 107. Structural analysis for thermal contraction of bridge

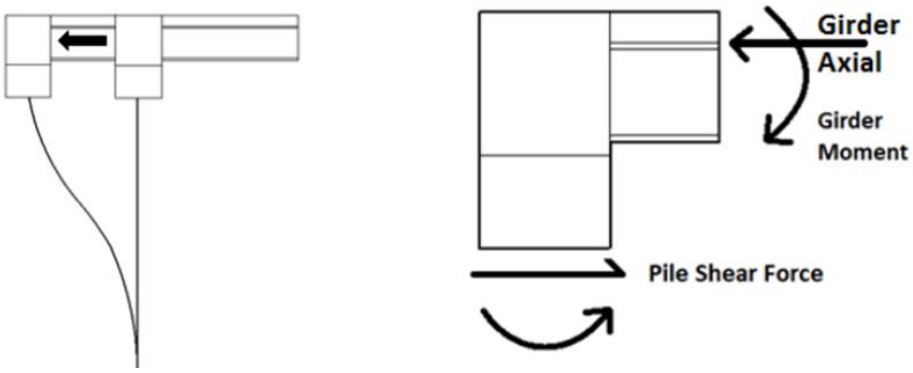

Figure 108. Structural analysis for thermal expansion of bridge

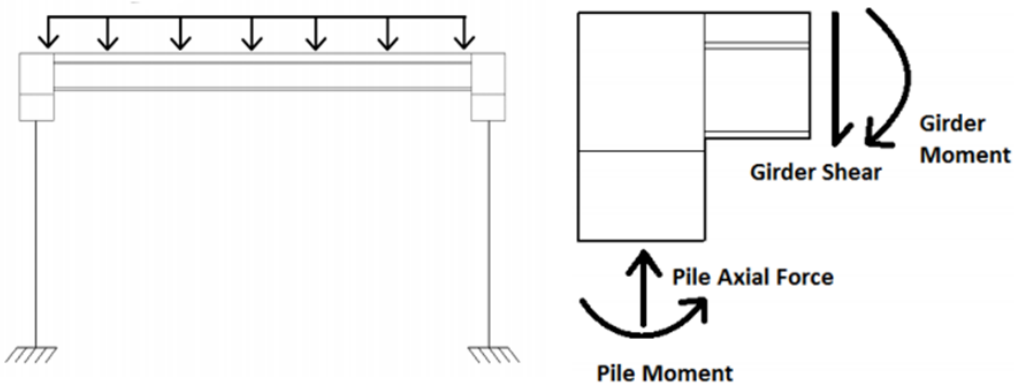

Figure 109. Structural analysis for live loading of bridge

The magnitude of loads to be applied was the same for Phase I of this project so comparisons could be made with the results. The horizontal loading was set to 100 kips from a study of thermal forces typically resisted by the stiffness of the foundation piles and surrounding soil. This load was not designed to fail the specimen, but to analyze the results at service loading. The vertical loading was set to 400 kips since it was the largest load that would be able to be applied in the structural laboratory. This vertical load is much greater than the service level loading

conditions to the integral abutment and maximum stresses that can be present in the foundation piles but was used to establish the failure mode of the connection details. Utilizing the results of these failure modes will aid in designing an appropriate factor of safety and help with designs using these integral abutment connection details.

5.2 Instrumentation

A variety of instruments were installed on the specimens to monitor and analyze the strength and durability of the three integral abutment connection details. First, to record the magnitude of the tension-side crack widths for each loading case, displacement transducers, called DCDTs, were installed at three positions on both the front and rear face of the specimens. These transducers would record the vertical displacements caused by cracking of the cold joint between the integral diaphragm and pile cap of the integral abutment. The result of these recordings would be compared to those of Phase I and report the severity of the possibility of infiltration of water or other chemicals that could cause structural deterioration of the connection details. Another two displacement transducers were installed at the rear face of the specimen to monitor any horizontal displacement, or slip, between the integral diaphragm and pile cap during horizontal loading.

Second, to record the development of the coupling materials, sacrificial strain gauges were installed on some of the coupling reinforcing steel bars for the UHPC joint and GRBC specimens, and on the steel sections of the pile coupler. These gauges would monitor the development of strains in the materials, which can be tabulated into stresses to determine the level of strength of the coupling materials during both loading cases.

Third, external strain gauges, called BDIs, were installed at the locations of the vertical displacement transducers to record the overall strength of the integral abutment during both load cases. The recorded values would be compared to values determined by AASHTO to declare which type of failure was present during the test.

Finally, displacement gauges, called string-pots, were installed at four corners of the pile cap to monitor any rotation of the pile cap that would be opposed to the assumed fixed boundary condition. Also, one displacement gauge was installed at the end of the cantilever beam to record the displacement of the beam during both load cases and compare it to the displacement of the joint crack.

The layout of the instrumentation for each specimen is shown in Figures 110 through 113. The squares represent the vertical displacement transducers; the pentagons represent the horizontal displacement transducers; and the triangles represent the external strain gauges, and the red dots represent the locations of the sacrificial strain gauges.

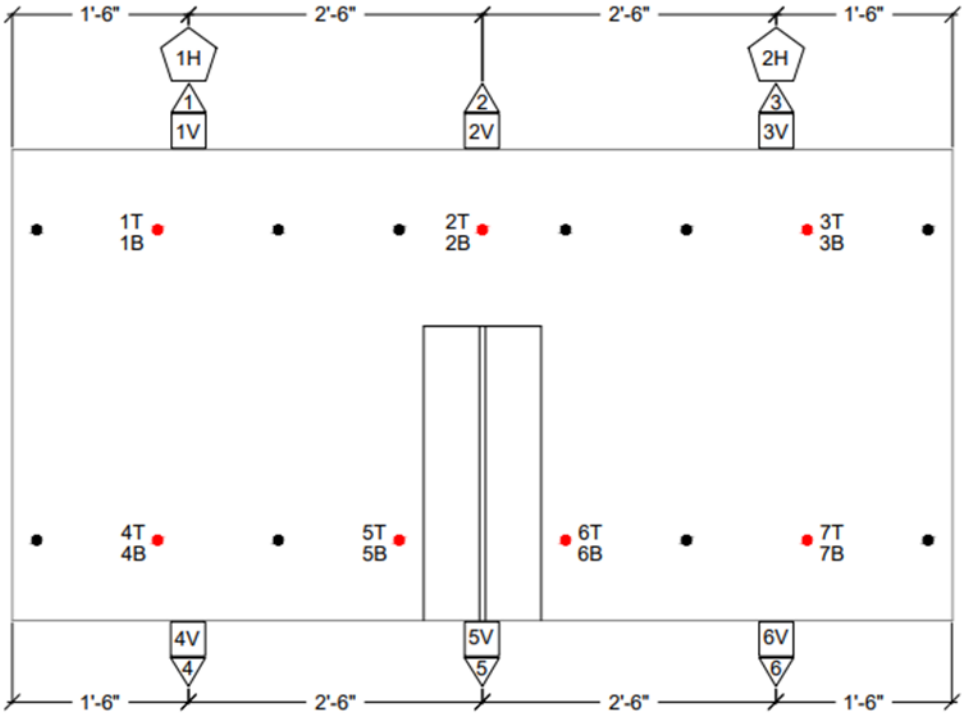

Figure 110. Instrumentation plan for UHPC joint

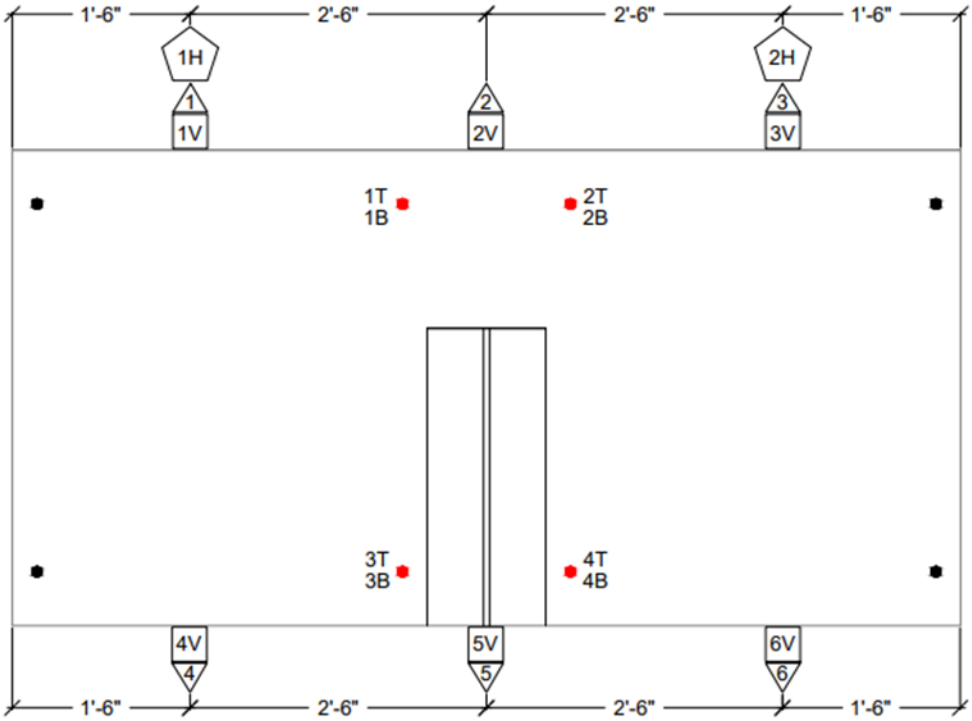

Figure 111. Instrumentation plan for GRBC

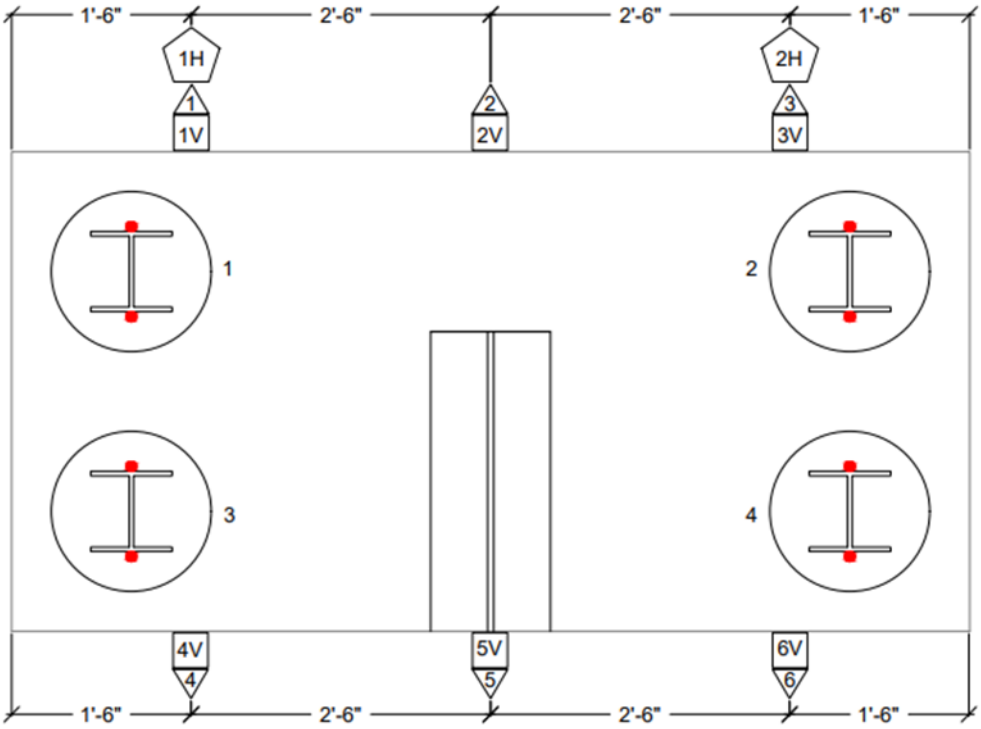

Figure 112. Instrumentation plan for pile coupler

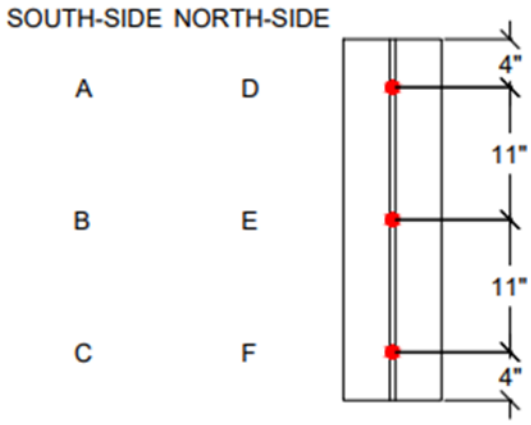

Figure 113. Sacrificial strain gauge plan for pile coupler steel sections

Photographs of the setup of the instrumentation for each specimen are shown in Figure 114.

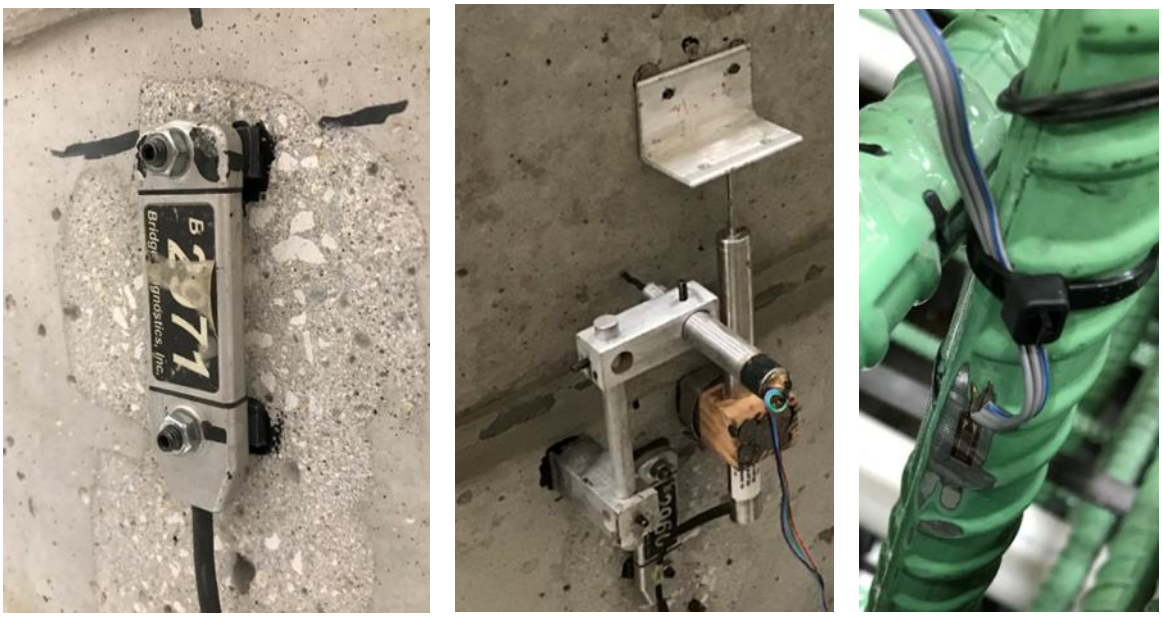

Figure 114. External strain gauge (left), vertical displacement transducer, horizontal displacement transducer, and external strain gauge (center), and sacrificial strain gauge (right)

5.3 Results

5.3.1 UHPC Joint

The horizontal loading reached the maximum value of 100 kips, which caused a crack at the front face of the abutment to be 0.018 in. (Figure 115).

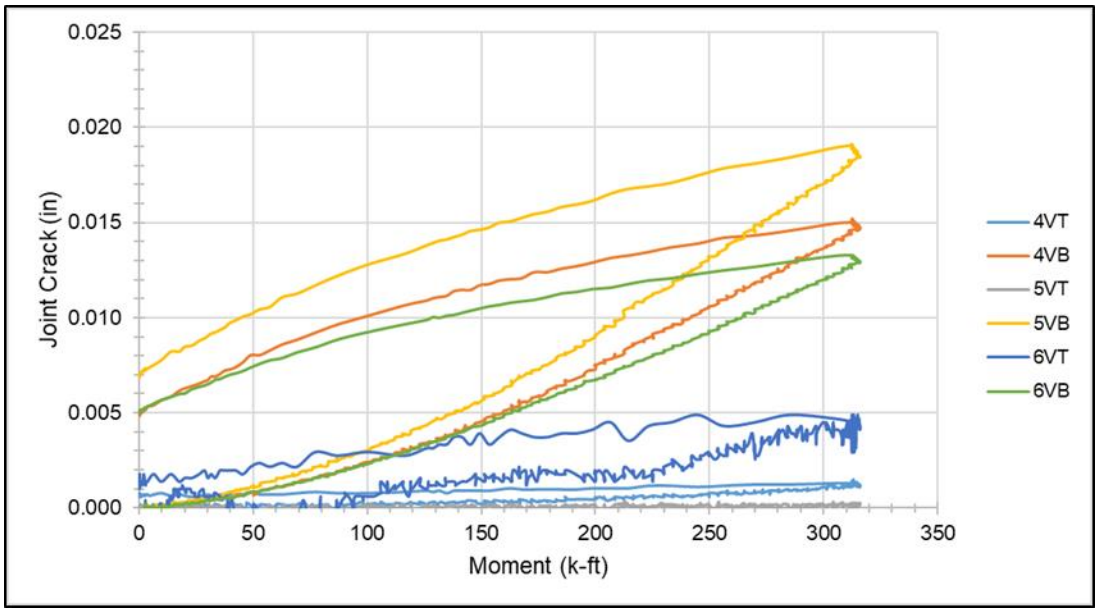

Figure 115. Crack width versus moment due to horizontal load

The control specimen from Phase I had a crack of 0.001 in. for the same loading; therefore, the crack seen from the UHPC joint connection was approximately 1.8 times greater.

Note that for this specimen, two displacement transducers were used to capture the crack propagation of both the integral diaphragm to joint interface (4VT, 5VT, and 6VT) and the joint to pile cap interface (4VB, 5VB, and 6VB), and the larger values of the cracks came from the joint to pile cap interface. This is reasonable since the surface preparation of the pile cap was not as complex as that for the integral diaphragm.

No horizontal slip was recorded for the connection, and the maximum reinforcing bar stress for the connection bars was approximately 12 ksi in the connection bars protruding from the pile cap.

The vertical load was then applied up to a value of 397 kips, at which point the beam began to fail due to the buckling of the web (Figure 116).

Figure 116. Beam buckling failure causing end of test

The maximum joint crack recorded at the rear face of the specimen at the maximum load was 0.032 in. (Figure 117).

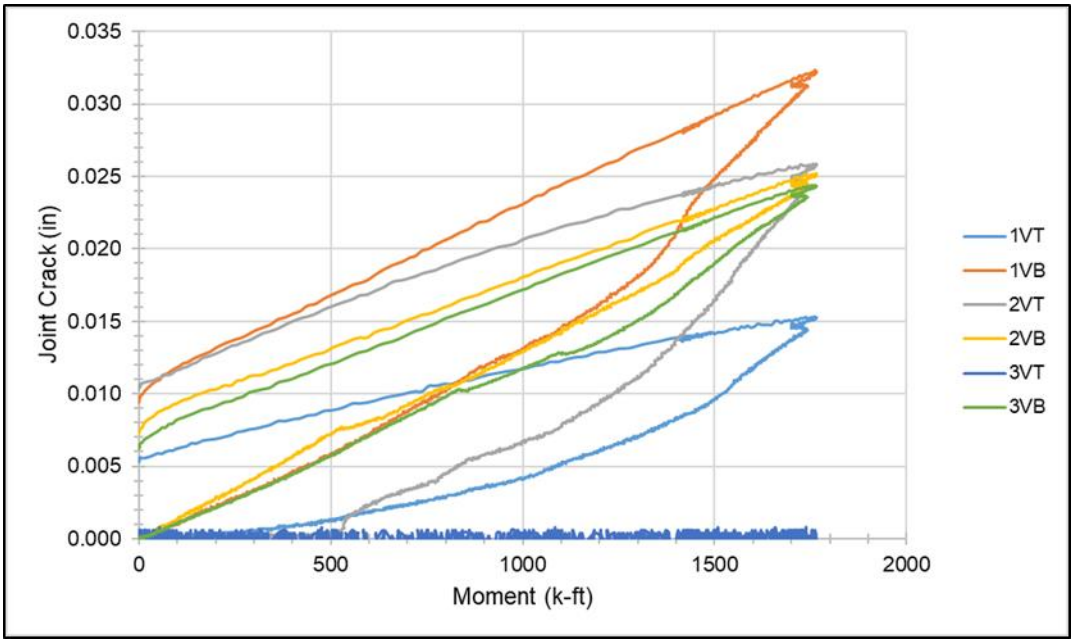

Figure 117. Crack width versus moment due to vertical load

The control specimen from Phase I reached a maximum load of 385 kips and reported a maximum joint crack of 0.025 in. The UHPC joint specimen had a crack of 0.031 in. under a

385-kip load, which is approximately 1.3 times greater than the control specimen. Again, it is shown most of the maximum joint cracks derived from the joint to pile cap interface, but after unloading the cracks closed (Figure 118).

Figure 118. UHPC joint rear face after testing

The maximum reinforcing bar stress recorded during the test was 48.1 ksi at the maximum load of 397 kips, which means none of the connection bars yielded (Figure 119).

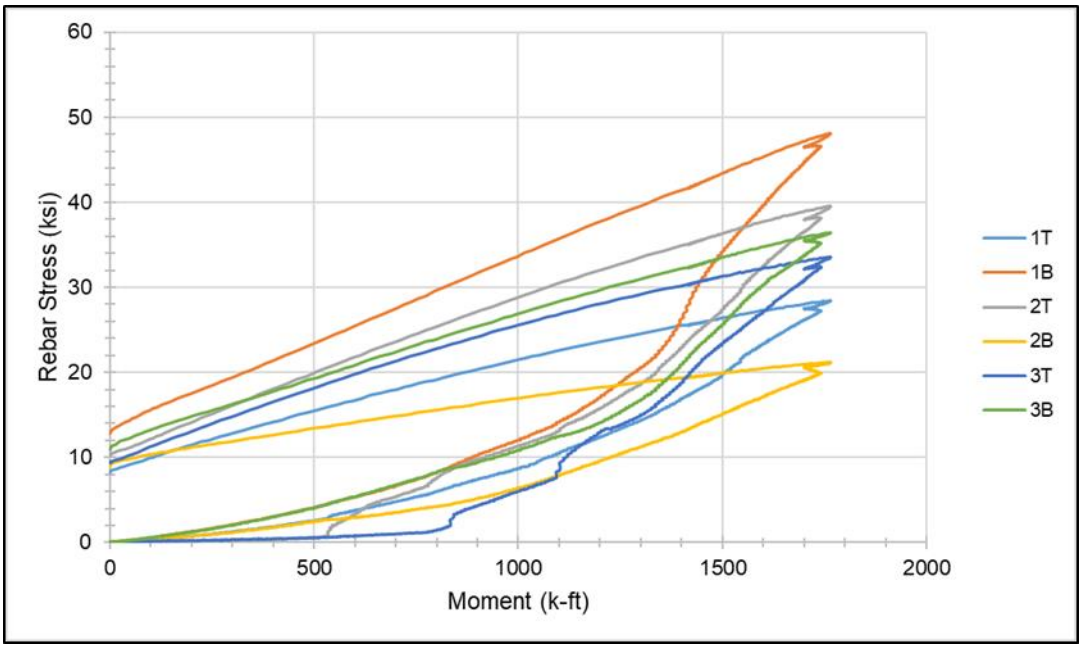

Figure 119. Tension reinforcing bar stress versus moment due to vertical load

Figure 119 shows the connection bars protruding from the integral diaphragm and the pile cap both had adequate, and near even, development which proves the design allowed for a proper amount of protrusion for the connection bars within the UHPC joint.

5.3.2 Grouted Reinforcing Bar Coupler

The horizontal loading reached a maximum value of 100 kips, which caused the crack at the front face of the abutment to be 0.020 in. (Figure 120).

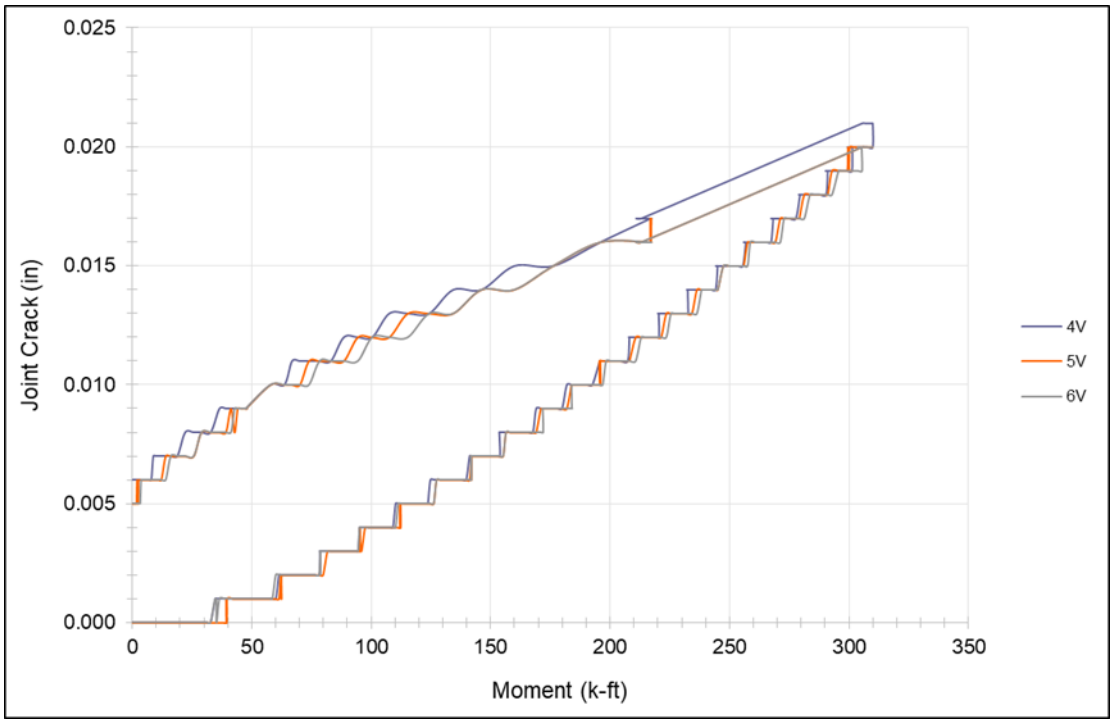

Figure 120. Crack width versus moment due to horizontal load

This value was compared to the Phase I GRBC design under the same loading, which was a crack of 0.001 in., and the cast-in-place specimen, which had a crack of 0.001 in.

No horizontal slip was recorded between the integral diaphragm and the pile cap. And the maximum reinforcing bar stress was tabulated to be about 20 ksi in the coupling bars protruding from the pile cap, which is only a third of the yielding stress for the reinforcing bars used.

The vertical load was then applied to a maximum of 400 kips, or a moment of 1,778-k-ft, which caused a crack at the rear face of the abutment to be 0.348 in. (Figures 121 and 122).

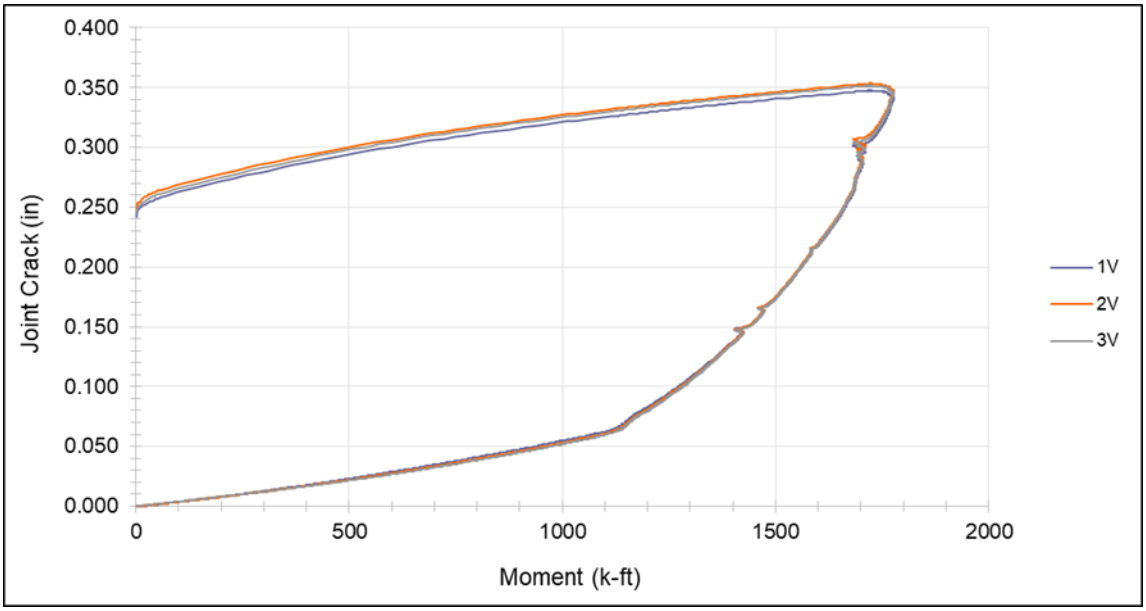

Figure 121. Crack width versus moment due to vertical load

Figure 122. GRBC rear face crack due to vertical load

The Phase I GRBC design reached a maximum vertical load of 338 kips, causing a crack at the rear face of the abutment of 0.035 in., while the GRBC design for Phase II had a crack of 0.176 in. at the same load, which is approximately 5 times greater than the Phase I result. This is a reasonable result since the Phase II design had half the couplers than that of Phase I. The cast-in-place specimen had a maximum vertical load of 385 kips causing a rear face crack of 0.025 in.,

the Phase II GRBC specimen at the same load had a crack of 0.309 in., which is approximately 12 times greater than the control specimen.

Analyzing the tension stresses in the coupling bars for the GRBC design show that at the maximum load of 400 kips, the coupling bars protruding from the pile cap had tabulated stresses of 123 ksi and 90 ksi for bars 1B and 2B, respectively, which shows these bars had yielded (Figure 123).

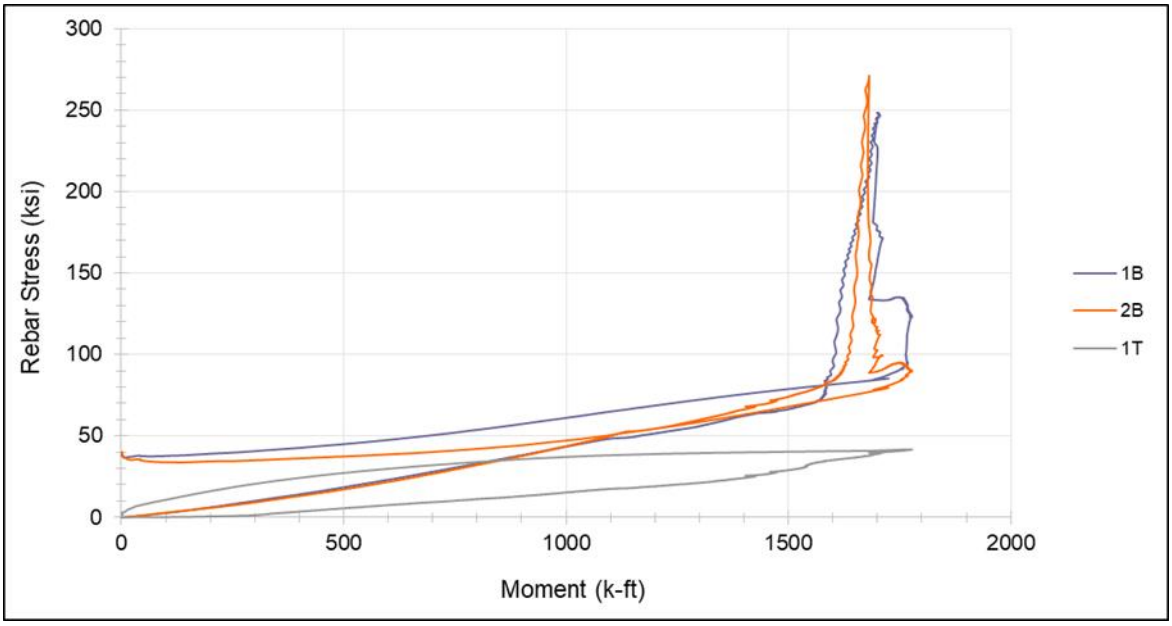

Figure 123. Tension reinforcing bar stress versus moment due to vertical load

The yield stress for the reinforcing bars used was 60 ksi, which was achieved at a loading of approximately 295 kips. For the Phase I GRBC design, at a load of 338 kips the maximum tensile stress in the coupling bars was 43 ksi, while the Phase II design coupler bars experienced a stress of 74.3 ksi at the same load, which is approximately 1.7 times greater. Again, this is a reasonable result due to Phase II design having half the couplers than that of Phase I. The cast-in-place specimen from Phase I experienced a maximum tensile reinforcing bar stress of 42 ksi at a load of 385 kips, for the Phase II GRBC design at the same load the maximum reinforcing bar tensile stress was 133 ksi, which is approximately 3 times greater.

It is important to note that the coupler bars in the integral diaphragm experienced a tabulated stress of 42 ksi for bar 1T, noting that bar 2Ts sensor malfunctioned. Thus, the difference in stress between bars 1B and 1T is approximately a factor of 3 and can be the result of the grout sleeves and the coupler bars in the integral diaphragm tending to rotate with the integral diaphragm causing the development of the coupler bars protruding from the pile cap to be much greater.

Referring to Figure 123, it can be seen there is a large spike in the reinforcing bar stresses toward the peak of loading. This is most likely due to the already yielded bars elongating even further due to a sustained load when observations were taking place.

Comparing the figures of the Phase II to those from Phase I, specifically the cracking due to vertical loading, the Phase I GRBC and the cast-in-place specimens resisted cracking for some load. This is not the case for the Phase II GRBC specimen, which began recording cracks at lower loads, almost half of that for the Phase I GRBC specimen. Again, due to the lesser amount of coupler bars, this result is not surprising and is reasonable.

5.3.3 Pile Coupler

The horizontal loading reached a maximum value of 100 kips, which caused the crack at the front face of the abutment to be 0.007 in. (Figure 124).

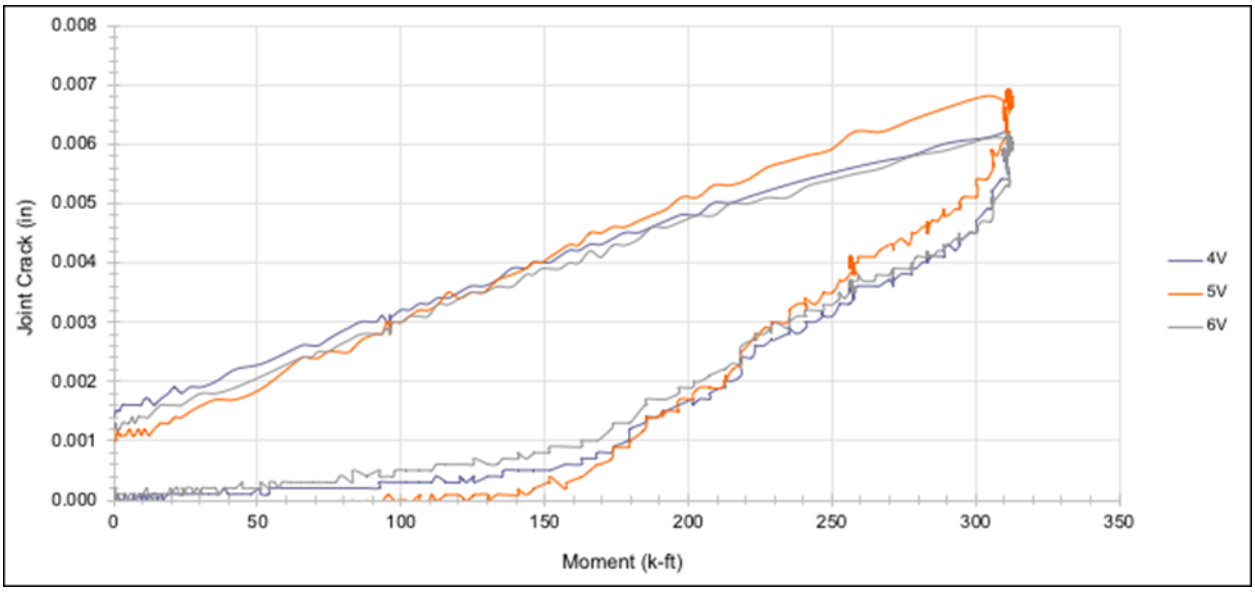

Figure 124. Crack width versus moment due to horizontal load

This value was compared to the Phase I pile coupler design under the same loading, which was a crack of 0.050 in., and the cast-in-place specimen, which had a crack of 0.001 in.

No horizontal slip was recorded between the integral diaphragm and the pile cap. And the maximum coupler stress was tabulated to be about 3.34 ksi in the coupling steel sections, which is essentially no stress in the coupling steel.

The vertical load was then applied to a maximum of 377 kips, or a moment of 1,677-k-ft, which caused a crack at the rear face of the abutment to be 0.306 in. (Figures 125 and 126).

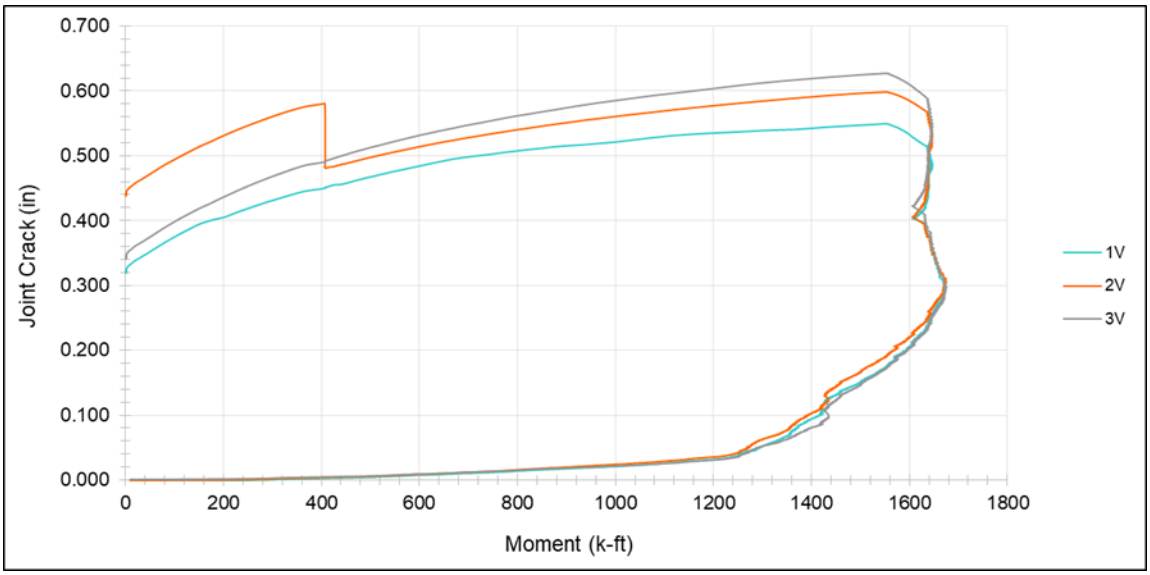

Figure 125. Crack width versus moment due to vertical load

Figure 126. Pile coupler rear face crack due to vertical load

When more load was attempted to be applied, only more displacement was gained from the specimen. During the sustained load, the joint crack reached a maximum value of 0.627 in. Also, during loading cracks propagated in the pile cap of the abutment near the bottom of the CMPs within the pile cap. These cracks led to larger cracks causing rotation of the pile cap recorded by the string pots (Figure 127).

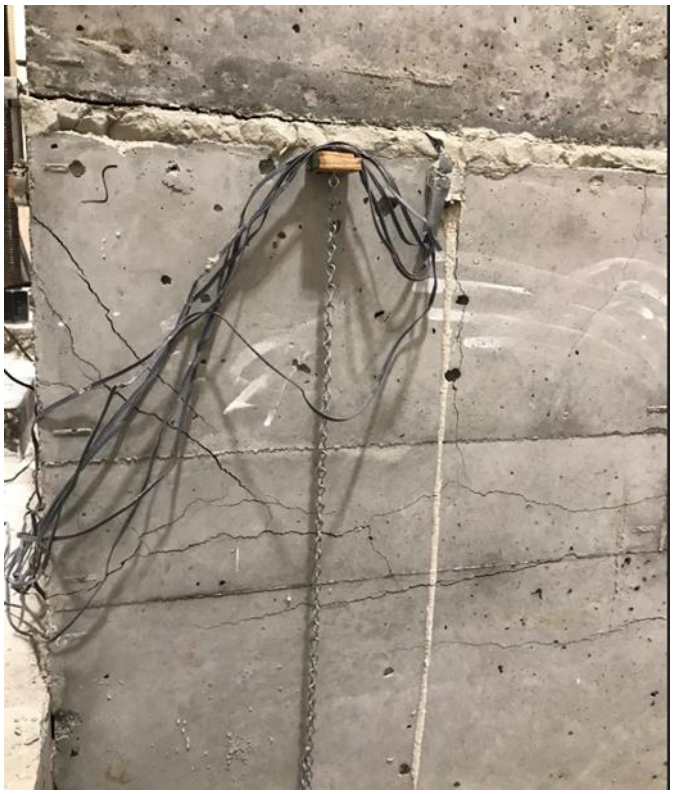

Figure 127. Pile coupler pile cap cracking due to vertical load

The maximum displacement recorded by the string pots was 0.353 in., which did occur at the same recording time at the largest joint cracking. So, it may be possible that the pile cap cracking assisted in the increase in the joint crack value. The Phase I pile coupler design reached a maximum moment due to vertical loading of 1,124-k-ft, causing a crack at the rear face of the abutment of 1.75 in., while the pile coupler design for Phase II had a crack of 0.031 in. near the same load, which is approximately 56 times less than the Phase I result. This shows that the concept of a moment couple, and longer piles, greatly improved the design of this connection. The cast-in-place specimen at a vertical load of 377 kips caused a rear face crack of 0.024 in., the Phase II pile coupler specimen at the same load had a crack of 0.306 in., which is approximately 12 times greater than the control specimen.

Analyzing the tension stresses in the coupling sections for the pile coupler show at the maximum load of 377 kips, the sections on the tension side of the abutment had a maximum tabulated tensile stress of 22.1 ksi, which is less than the 50 ksi yield stress for the sections (Figure 128).

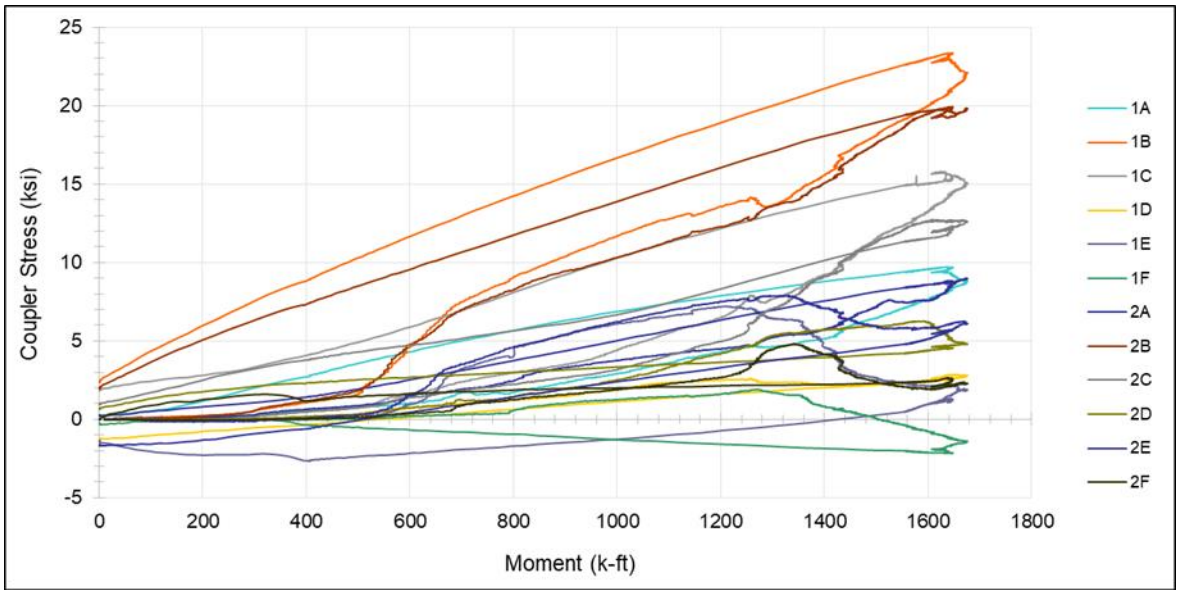

Figure 128. Abutment tension-side steel section stresses versus moment due to vertical load

For the Phase I pile coupler design, the maximum stress in the steel sections was reported to be 26 ksi at the maximum loading of 1,124-k-ft, while the Phase II design sections experienced a maximum stress of 13 ksi at the same load, which is approximately 2 times less. This is a reasonable result since there were double the number of couplers (four) for the Phase II design than there were for the Phase I design (two couplers).

Figure 128 depicts how the steel sections on the tension-side of the abutment developed during the vertical loading. It can be seen that the south-side mid-point of each coupler section, 1B and 2B, developed the maximum stresses compared to the rest of the areas recorded. This is reasonable due to those sensors being at the location of the cold joint between the pile cap and integral diaphragm for the specimen where failure would initiate. Also, the south-side sensors for each coupler section, 1A-1C and 2A-2C, developed higher stresses than that of the north-side sensors for the same sections, 1D-1F and 2D-2F. This shows the steel sections had slight bending within the CMPs instead of acting purely axially.

Comparing the Phase I design to the Phase II design for the pile coupler, it is apparent the structural performance for the Phase II design was successful. This is shown through the maximum rear face crack at the maximum loading and maximum tensile stresses within the coupling sections.

CHAPTER 6. SUMMARY

To advance the use of integral abutments with ABC, rather than relying on a closure pour, three connection details were designed to be constructed full-scale and tested in the structures laboratory to monitor overall strength and durability of each connection detail. The design philosophy of each connection detail was to be able to complete adequate structural connections in a matter of a few days while maintaining the structural integrity and response present with the closure pour connection. Two of the connection details were revisions of those investigated by Phase I of the project, called the grouted reinforcing bar coupler and pile coupler, and the third connection detail was a design created through the Iowa DOT to be used in an upcoming real-life project.

The grouted reinforcing bar coupler utilized grouted reinforcing splice couplers, which spliced protruding reinforcing bars from the pile cap into sleeves within the integral diaphragm. The pile coupler used four 2.5-foot steel sections, which spliced the integral diaphragm and pile cap, encased in a cementitious material similar to the method used for foundation piles to pile cap connections used in ABC. The UHPC joint connection utilized a “notched” cross section with protruding reinforcing bar from the integral diaphragm and pile cap that was filled with UHPC. All three connection details were successfully constructed and documented in detail, specifically concerning any issues that arose during the construction process and were evaluated based on, not only the constructability of each detail, but also the strength and durability of the connection.

The grouted reinforcing bar coupler design was revised to use only 8 splices rather than the 17 used in Phase I. This revision helped to alleviate the tight construction tolerances present with the Phase I design but was designed to maintain allowable structural behavior throughout the cold joint connection. A plywood template was used to “match cast” the grouting sleeves of the integral diaphragm to the protruding bars from the pile cap and was proven successful through a “dry fit” done prior to the installation of the connection. This construction method should be applicable to the field for fabricators and result in successful alignments of the connections, but the presence of two ends of these connections could cause some issues during alignment due to any skew present within the span of the bridge and would require high quality control and great attention to detail during design, fabrication of the precast elements, and installation of the connection.

The laboratory testing of the grouted reinforcing bar coupler resulted in values that were reasonable due to the revision of the design. The maximum developed crack width under loading was 0.348 in., but the crack width to be compared to the Phase I loading, 0.035 in., was 0.176 in. or about 5 times greater than Phase I. Also, with the decrease of splices within the specimen, the comparison of connection reinforcing steel bar stresses was of interest. The maximum reinforcing bar stress reported in the Phase I design of the grouted reinforcing bar coupler was 43 ksi, while the design for Phase II recorded a maximum stress of 74.3 ksi or about 1.7 times greater than Phase I. This was a reasonable result due to the Phase II design having about half of the connections that the Phase I design did.

The pile coupler design was revised to have four 2.5-foot steel sections splicing the integral diaphragm and the pile cap that were encased in a cementitious material. The CMP voids' alignment was not as complex compared to the alignment for the grouted reinforcing bar coupler, which was a benefit for the connection. The overall construction of the specimen was not difficult, but tedious due to more accessories required for the connection elements, specifically within the integral diaphragm. Fabricators and designers need to have exceptional coordination and quality assurance to ensure all materials are present for adequate and efficient construction of the precast elements, but the connection installation should be simpler than that of the grouted reinforcing bar coupler due to the larger splices.

The laboratory testing of the pile coupler was promising for the connection detail and showed great improvement with the revisions done to the design. While Phase I resulted in a failed detail that had a maximum crack of 1.75 in., the Phase II design recorded a maximum cold joint crack of 0.031 in. under the same load. Comparing the Phase II design of the pile coupler to the control specimen, the maximum cold joint crack seen by both connection details under the same load was 0.306 in. and 0.024 in., respectively.

The UHPC joint design utilized a "notched" cross section formed into the integral diaphragm, protruding reinforcing bars from the integral diaphragm and pile cap, and filling the void between the two precast elements with UHPC. The construction of the precast elements was not difficult and should be achievable for experienced fabricators. It is important that the fabricators ensure the required protrusions for the reinforcing bars to provide adequate development length within the UHPC joint, which can be accomplished through proper quality control procedures. The connection install needs to have exceptional construction techniques and coordination to be able to cast the UHPC joint as one large batch for each abutment to prevent any layering of material within the joint which would cause additional cold joints within the connection.

The laboratory testing of the UHPC joint proved the connection would be able to prevent a high magnitude cold joint crack and consequently prevent infiltration of deteriorating chemicals and water. Since the failure mechanism seen in the specimen was the web buckling of the beam, it can be assumed the connection detail is most comparable to the closure pour connection detail for integral abutments, since under the same load the UHPC joint specimen had a maximum joint opening of 0.031 in. and the closure pour specimen had a maximum joint opening of 0.025 in.

Analyzing the Phase II connection details, it is important to note not only the maximum rear face crack, but also the propagation of the rear face crack due to vertical loading. The pile coupler did not record any cracking until a loading of approximately 400-k-ft, the grouted reinforcing bar coupler design resulted in rear face cracking almost instantaneously upon loading, and the UHPC joint had nearly no cracking throughout loading. The propagation of cracking is important to know since any cracking of the cold joint will allow for infiltration of water or other chemicals into the structure, which can lead to deterioration of the coupling materials. These propagations are the result of only one static load and would presumably increase in magnitude over cyclic loading and presence of deterioration of the connection materials.

The outcome of this study can lead to the initiation of other investigations focusing on the following topics:

- Revision of the UHPC joint connection detail with the “notch” of the front face of the integral diaphragm being transferred to the front face of the pile cap. This would allow the protruding coupling bar from the pile cap to be lowered enough to not cause an issue with the beam during slide-in construction yet have enough length for proper development within the UHPC. By making this revision, formwork for the bottom of the integral diaphragm could be simplified but would require another round of research to verify.

- Presence of confinement reinforcing around the CMPs within the pile coupler since these are where cracks propagated within the precast elements.

- Introducing a spiral reinforcing cage instead of H-pile sections for the pile coupler splicing materials which may make the connection easier to standardize, while preserving the concept of the connection.

- Grouted reinforcing bar coupler construction and testing utilizing grout sleeves two sizes larger than the splicing rebar used, #10 sleeve for #8 bar for example, which is allowed by Dayton Superior and could further alleviate construction tolerances.

- Cyclic loading of the connection details.

- Analysis of real-world applications of the tested connection details through field monitoring.

REFERENCES

Culmo, M. P. 2011. *Accelerated Bridge Construction: Experience in Design, Fabrication, and Erection of Prefabricated Bridge Elements and Systems.* Federal Highway Administration, Office of Bridge Technology, McLean, VA`.

Culmo, M. P. 2009. *Connection Details for Prefabricated Bridge Elements and Systems.* Federal Highway Administration, Office of Bridge Technology, McLean, VA.

Haber, Z. B., M. Saiid Saiidi, and D. H. Sanders. 2013. *Precast Column-Footing Connectoins for Accelerated Bridge Construction in Seismic Zones.* Center for Civil and Environmental Engineering, University Nevada, Reno, NV.

HNTB Corporation, Genesis Structures, Inc., Structural Engineering Associates, and Iowa State University. 2013. *SHRP 2 Report S2-R04-RR-2: Innovative Bridge Designs for Rapid Renewal: ABC Toolkit.* Second Strategic Highway Research Program, Washington, DC.

Hosteng, T., B. Phares, A. Abu-Hawash, D. Bierwagen, and J. Nelson 2015. *Laboratory Investigation of Grouted Coupler Connection Details for ABC Bridge Projects.* Bridge Engineering Center, Iowa State University, Ames, IA.

Hosteng, T., B. Phares, and S. Redd. 2016. *Strength, Durability, and Application of Grouted Couplers for Integral Abutments in Accelerated Bridge Construction.* Bridge Engineering Center, Iowa State University, Ames, IA.

Iowa DOT. 2014. *Special Provisions for Ultra High Performance Concrete.* Iowa Department of Transportation, Ames, IA.

Jansson, P. O. 2008. *Evaluation of Grout-Filled Mechanical Splices for Precast Concrete Construction.* Michigan Department of Transportation, Construction and Technology Division, Lansing, MI.

Nelson, J.S. 2014. *Iowa Accelerated Bridge Construction History.* Iowa Department of Transportation, Ames, IA

Noureddine, I. M. 1996. *Plastic Energy Absorption Capacity of #18 Reinforcing Bar Splices Under Monotonic Loading.* California Department of Transportation, Division of New Technology, Materials, and Research, Office of Structural Materials, Sacramento, CA.

Phares, B., J. M. Rouse, and J. Miksell. 2013. *Laboratory and Field Testing of an Accelerated Bridge Construction Demonstration Bridge: US Highway 6 Bridge over Keg Creek.* Bridge Engineering Center, Iowa State University, Ames, IA.

Rowell, S. P. 2015. Performance of Reinforcement Bar Mechanical Couplers at Low, Medium, and High Strain-Rates, Structures Congress. April 23–25, Portland, OR.

Wipf, T. J., F. W. Klaiber, and S. Hockerman. 2009. *Precast Concrete Elements for Accelerated Bridge Construction: Volume 1-1. Laboratory Testing of Precast Substructure Components: Boone County Bridge.* Bridge Engineering Center, Iowa State University, Ames, IA.