ABC Design of UHPC Decked I-Beam Vehicular Bridge in Ontario, Canada

Maher K. Tadros, Ph.D., P.E., eConstruct.USA LLC, (402) 884-9998, maher.tadros@econstruct.us
Adam Sevenker, M.S., P.E., eConstruct.USA LLC, (402) 884-9998, asevenker@econstruct.us
Don Gardonio, President of FACCA Inc., (519) 975-0377, don@facca.com
Philip Loh, M.Eng., P.Eng., Dura Concrete Canada Inc., (519) 975-0377, philip@facca.com

ABSTRACT

The structural engineering firm, eConstruct (Omaha, Nebraska, United States), has designed an Ultra-High Performance Concrete (UHPC) decked I-beam to be installed at a new privately-owned vehicular bridge in Shanty Bay, Ontario, Canada for demonstration and evaluation. Through a technology transfer joint venture agreement between FACCA Incorporated (Ruscom, Ontario, Canada) and Dura Technology (Ipoh, Malaysia), the Dura UHPC is batched using local North American raw materials. This paper will focus on development of structural design criteria of the UHPC decked I-beam, with emphasis of Accelerated Bridge Construction (ABC) in the implementation of this Design-Build project. The paper will also list items needing further investigation.

One of the biggest challenges faced thus far has been the creation of formwork that will allow for the top flange waffle deck to be cast simultaneously with the rest of the beam without creation of any cold joints. This paper will describe the prototype pieces and small specimens which are currently being cast for element testing. In line with the ABC objective, details have been developed to implement a precast semi-integral abutment design with the decked I-beam in staged casting, as well as precast UHPC piles, retaining walls and approach slabs. Construction of the bridge is planned to be completed by the time of this conference. The conference presentation will therefore be expected to show photos of production, handling and erection of the various precast bridge components.

INTRODUCTION

This paper will focus on the design and implementation of the first UHPC vehicular bridge in Canada, with discussion on the Acceleration Bridge Construction (ABC) design aspects. This is a collaborative effort between the Ontario Design-Build Contractor, FACCA, Inc., and the engineering designer eConstruct USA, LLC led by Dr. Tadros, who is also the original developer of the popular NU I-Girder. The goal was to help convert the NU I-Girder to a product which fully incorporates UHPC. FACCA also engaged Dr. Jackie Voo, of the Malaysian company DURA, to give advice about implementing the technology he has successfully used in Malaysia. Thus, a strong team was formed including the original developer of the NU I-Girder, the most successful implementer of UHPC, and a versatile contractor who has been successful in precasting concrete bridge products and building bridges with them.

The proposed UHPC DIB vehicular bridge is a replacement for a deteriorating private timber structure in Shanty, Ontario with a posted load rating of 500 kN. The owner of the bridge has requested the new structure to be designed for the CL-625-ONT truck loading (625 kN total axle load) according to the Canadian Highway Bridge Design Code (CHBDC) (1). The new bridge will be a 15-m single span structure which eliminates the pier in the creek as in the existing bridge. Figure 1 shows the elevation of the proposed bridge and outline of the existing structure.

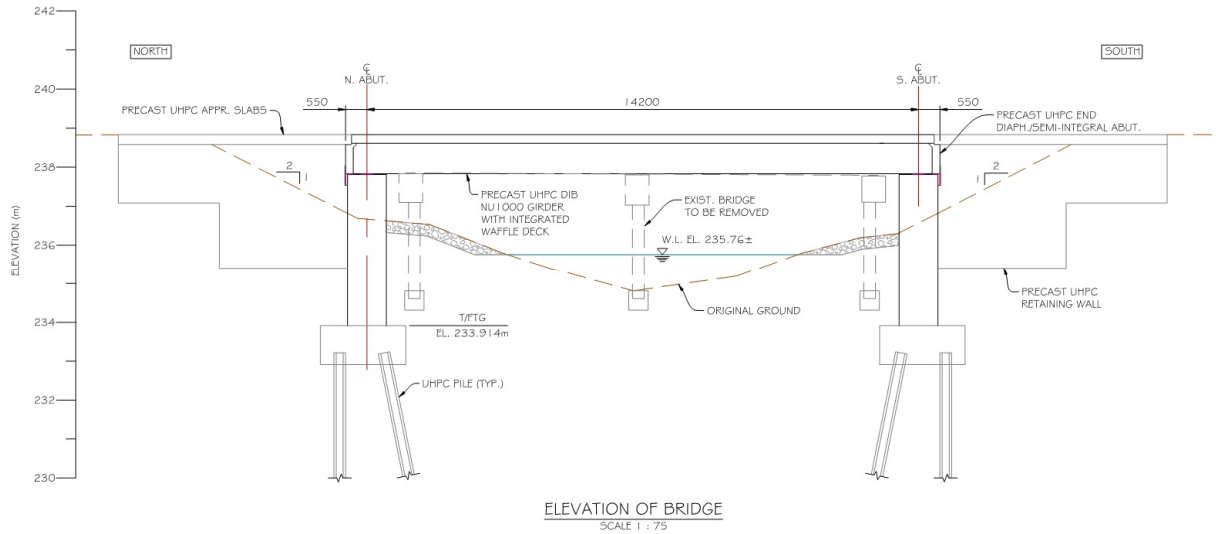

Figure 1. Proposed UHPC DIB Bridge Elevation

This article provides a summary of the development of the UHPC Decked I-Beam (UHPC DIB) covered in two previous papers. However, this article primarily focuses on the further optimization of the UHPC DIB system and discusses the introduction of innovative details for accelerated bridge construction including precast semi-integral abutments and end diaphragms with vertical UHPC closure joints.

BACKGROUND

A beam having the general shape of the NU I-girder was found to be a reasonable starting point. The Federal Highway Administration (FHWA) and the state of Iowa have successfully used a waffle slab deck (2). This inspired our team to try to use a similar ribbed slab deck system that is integral with the web and bottom flange. Several trials produced the section shown in Figure 2.

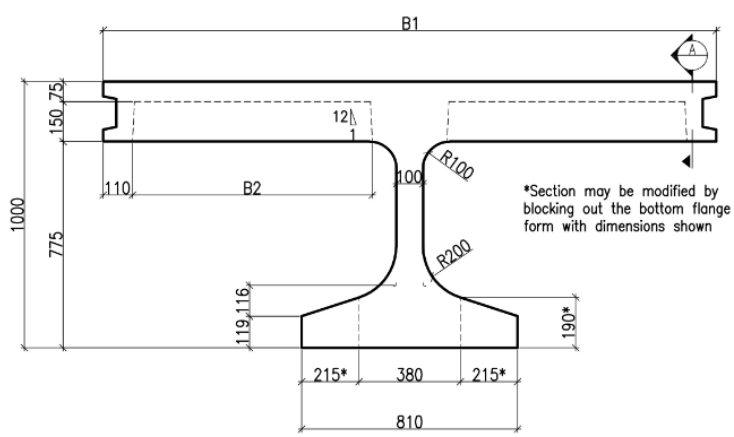

Figure 2. 1000 UHPC Decked I-Beam with Variable Top Flange

As the team attempted to develop the shape to a family of sizes for spans up to 60 m (197 ft), we had to make the top flange large enough to accommodate the longer spans. The top flange is also sized to fit in a tractor trailer without the need for oversize permit for transportation. As a result, it was decided to keep the same shape of top flange, bottom flange and web width.

Thus, the variables for various sizes are:

1. The total depth of 1000, 1500, and 2000 mm. Figures 2, 3, and 4, respectively.
2. The top flange width (B1) of 1000, 1500, 2000, 2500 and 3000 mm.
3. The bottom flange can be blocked out to produce a narrow bottom flange in order to save concrete volume for designs that do not require the full bottom flange.

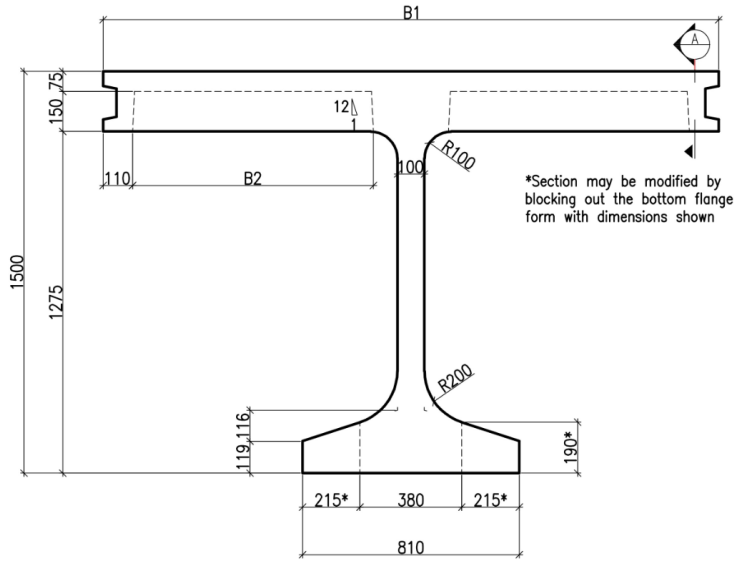

Figure 3. 1500 UHPC Decked I-Beam with Variable Top Flange

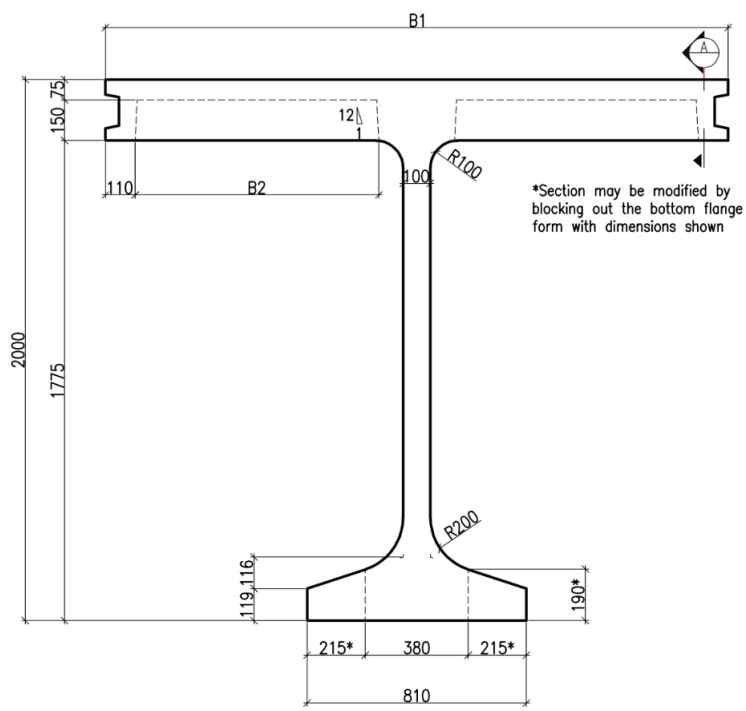

Figure 4. 2000 UHPC Decked I-Beam with Variable Top Flange

For the proposed vehicular bridge, a section size was developed for a 15 m (49 ft) span would lead to a total depth of 1000 mm (39.3 in.); the shortest of the family of girders. The overall girder height of 1000 mm consists of a bottom flange similar to the NU I-Girder for placement of prestress strand, a thin web measuring 100 mm (3.9 in.) in width, and a variable width waffle deck top flange. Development of the 1000 mm girder forms and small-scale testing is currently underway with plans to install a new privately-owned vehicular bridge in Shanty Bay, Ontario, Canada for demonstration and evaluation in early 2020. Note that the 1000 mm depth is capable of spanning longer than the 15 m span of the demonstration bridge. It was developed with the intention to have a series of sizes covering spans up to 60 m (197 ft).

The demonstration bridge will be a two lane 9.8 m (32 ft) wide bridge with a single span of 14 m (46 ft). It will consist of four 1000 mm deep girders at 2475 mm (8 ft) spacing. The decked section eliminates deck forming at the bridge site. Instead, the girders will be joined together with three longitudinal UHPC closure pours, see Figure 5. The typical joint detail consists of a 200 mm (7.9 in.) wide gap with an additional 50 mm (2.0 in.) keyway in each girder flange. The keyways ensure load transfer from one flange to the other and the 200 mm wide gap allows for splicing of transverse reinforcement within the joint for deck continuity. It is important to note that the development length and rebar splice length in UHPC is reduced significantly because of the concrete's material properties. The 150 mm (5.9 in.) splice detail provided is adequate for reinforcement up to 20M (#6) bars (3).

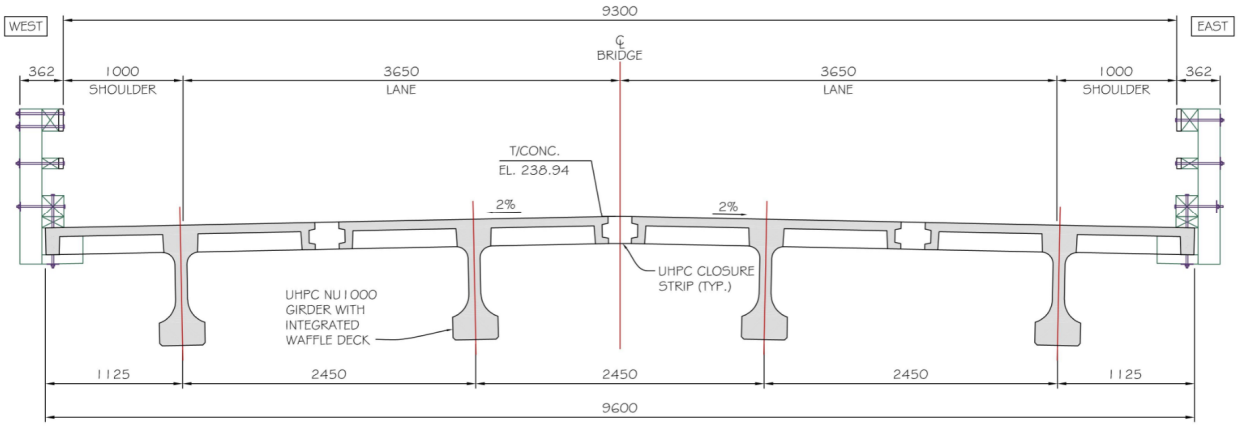

Figure 5. Proposed UHPC DIB Bridge Precast Modules with UHPC Closure Joints

The integrated deck (top flange) incorporates details of a waffle slab to minimize the quantity of UHPC material. The transverse ribs are spaced at 500 mm (19.7 in.) to house the transverse deck reinforcement and the longitudinal rib locations are based on bridge geometry.

The web has the most significant impact on concrete quantities and girder weights. In some applications in Ontario, typical girder products have webs 150 mm or wider. This product has a web which is reduced to only 100 mm providing just enough space for a single leg vertical bar (stirrup) with sufficient cover on each side; should shear reinforcement be required. For the bridge layout and the load conditions of the demonstration bridge it was found that the beam ends require some conventional reinforcement for local effects due to prestressing, but otherwise no additional shear reinforcement is required.

The bottom flange is designed to be able to hold up to 60 – 15.2 mm (0.6 in.) diameter strands at 40 mm (1.57 in.) spacing, or up to 42 – 17.8 mm (0.7 in.) diameter strands at 50 mm (2.0 in.) spacing. Each girder of the demonstration bridge will only require 14 – 15.2 mm (0.6 in.) diameter prestressed strands. Later, it was decided to block out 215 mm (8.5 in) on each side of the bottom flange from 810 mm (31.9 in.) wide down to 380 mm (15.0 in.). This resulted in two benefits: (1) less UHPC material is required reducing production cost and product weight and (2) the prestress strands are concentrated near the web area reducing local stress distribution and avoiding possible cracking due to splitting forces.

As shown in Figure 5, due to the traffic volume and usage requirements at this location, the bridge railings are TL-2. The capacity provided in the UHPC DIB deck overhang seems to justify up to a TL-4. However, testing is recommended before going to the higher level.

WAFFLE DECK OPTIMIZATION

The UHPC waffle deck slab is designed to be cast integrally with the girder having concrete ribs spanning in transverse and longitudinal directions. The width of transverse and longitudinal ribs was chosen based on the side cover requirements for the reinforcement with tapering of the rib for easy removal of panel formwork. The longitudinal rib spacing is determined by the bridge layout and the girder spacing. The reinforcement required in the transverse direction along with the capacity of the flat plate deck element determines the transverse rib spacing.

The reinforcement needed to resist the design wheel loads is provided in the ribs in both directions. It had previously been recommended to limit the transverse spacing to 300 mm (11.8 in.) in order to maintain one rib underneath a wheel at all times and limit any local damage to the flat plate deck element and control cracking of the panel under service loads. However, the authors believe that by further utilizing the material properties of the UHPC and by introducing high strength, corrosion resistant steel, ChrōmX, the design can allow the rib spacing to be increased to 500 mm (19.7 in.). This would further reduce the number of ribs in the top flange resulting in more economy by using less of the relatively expensive UHPC.

The design of the beam in the longitudinal direction did not consider the fiber strength of the UHPC as the strength gained from the fibers did not provide significant savings toward the reduction of prestressing strand. However, the waffle deck is conventionally reinforced and does not benefit from prestressing like the longitudinal direction. Therefore, the fiber strength was taken into account for flexural strength design.

The stress-strain compatibility procedure was utilized to determine the nominal moment capacity of a T-beam consisting of one rib and its tributary flat plate deck element. This procedure requires an iterative process and takes advantage of the tensile strength of the UHPC. The stress-strain curve for UHPC was simplified, as shown in Figure 6, where the curve plateaus at an assumed value of 15 MPa (2.2 ksi) and ignores any additional strength from strain hardening. The fibers are then assumed to have an ultimate strain limit where once the fibers reach this limit, they are assumed to lose their effectiveness. This strain limit was assumed to be 0.005.

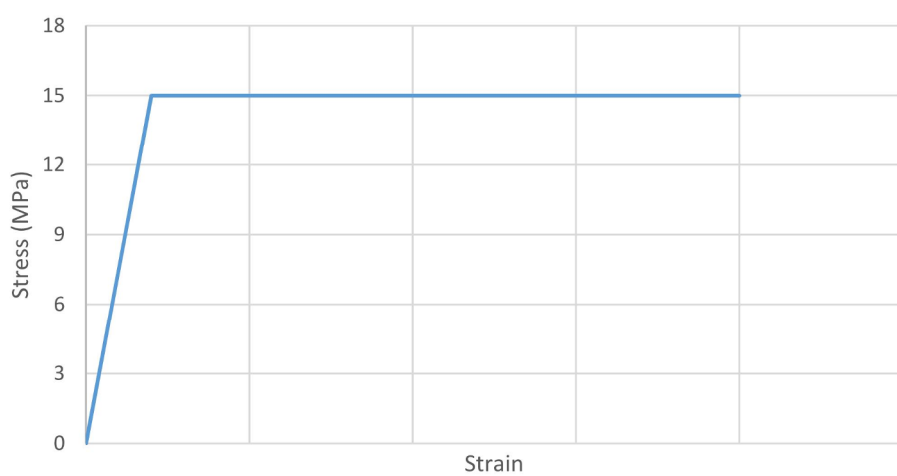

Figure 6. Assumed UHPC Stress-Strain Curve

The flexural analysis showed that 15M (#5) ChrōmX bars at 500 mm (19.7 in.) spacing at the bottom of the rib satisfies transverse positive moment demand due to the design truck.

For negative moment, the flexural analysis has the tension in the relatively wide deck plate and the compression in the stem of the T-beam. The member has typical tension reinforcement in the top plate, there is also concrete tension due to the fibers in the UHPC, as well as concrete compression and compression steel in the stem.

The flexural analysis of this T-beam section led to an interesting result. It was found the stress-strain compatibility calculation resulted in two solutions. There is one equilibrium solution where the neutral axis is near the center of the member. The deck fibers in the top plate have not yet reached their assumed strain limit. Therefore, there is a relatively large amount of UHPC deck fibers in the top plate providing tensile resistance along with the reinforcing steel.

However, there is a second solution where the neutral axis is further down in the stem. As the member is subject to further loading, the fibers in the top plate all reach their assumed strain limit and become ineffective. A small amount of UHPC fibers in the stem then begin to provide tensile resistance along with the now yielded tension reinforcement and equilibrium is once again obtained.

It was determined that the fiber capacity was adequate assuming a relatively low resistance factor. However, for the sake of redundancy, and pending full-scale testing, it was decided to also include 15M (#5) ChrōmX bars at 250 mm (9.8 in.) spacing in the top of the deck.

In Ontario, Canada, due to the extensive application of deicing salts on its bridges during winter months, the bridge decks are commonly overlain by waterproofing and asphalt pavement. For the demonstration bridge, with the superior durability properties of the UHPC, such as very low chloride ion penetrability (RCP < 100 Coulombs), and the use of corrosion resistant reinforcing bars, we have elected to leave the bridge deck exposed. We are currently looking at installing instrumentation to monitor the long-term performance of the bridge deck for the demonstration bridge.

PRECAST SEMI-INTEGRAL ABUTMENT DIAPHRAGM

Details have been developed to implement a precast semi-integral abutment design with the UHPC Decked I-Beam. The diaphragm will be a second stage UHPC precast element that will have a vertical joint similar to the one used for the deck, shown in Figure 5. The closure pour will make the diaphragm one continuous element and can be cast at the same time as the deck splice joint. Any reinforcement needed to resist the backfill and compaction pressure against the superstructure will be projected out and spliced using UHPC in the joint closure pour, as can be seen in Figure 8.

In order to transfer the approach slab loads down into the bearings, the loads must be transferred from the diaphragm into the DIB. Smooth UHPC cold joints have very low interface shear capacity. Therefore, trapezoid deformations will be precast into the DIB at both ends of the beam using form liners. The trapezoidal sections will force a shear failure plane to pass through the UHPC engaging the high shear friction capacity of the fibers. Additionally, 6-15M (#5) steel reinforcement will be provided to ensure there is a clamping force between the two elements.

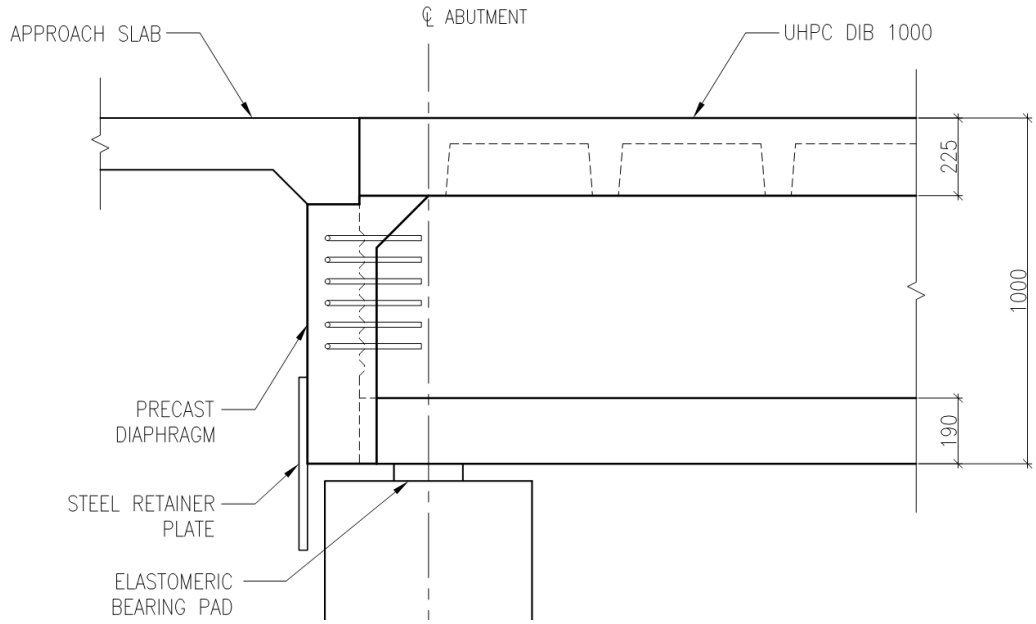

Figure 7. Abutment Detail (Typical reinforcement not shown for clarity)

With the precast end diaphragms, there is a need for a vertical closure joint to connect the adjacent diaphragms, as shown in Figure 8. The vertical closure joints will be formed and cast with UHPC at the same time as the deck closure joints.

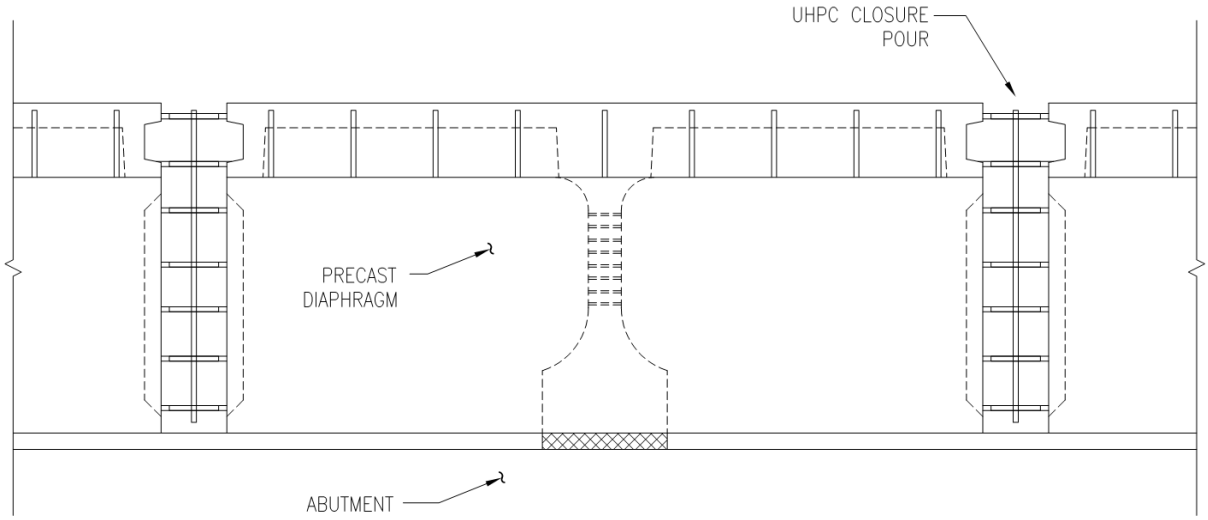

Figure 8. Elevation of Proposed Precast End Diaphragms with Vertical Closure Joints

TESTING PROGRAM

A full-scale specimen and several small specimens are being created for the purpose of verifying the design assumptions and to gain additional knowledge for further refinement of the design.

A full-scale, 15 m (49 ft) beam will be cast per the expected design for the demonstration bridge. Each end will be provided with a UHPC second-stage precast end diaphragm to provide adequate anchorage for the strands. The strands will be bent and embedded into the diaphragm. This anchorage will enhance the shear behavior of the beam. The anticipated full-scale tests include the following:

1. Flexure: The beam will be loaded gradually during the flexure test to reach a maximum load exceeding the actual service loads of the bridge. However, loading up to flexural failure is not planned in order to preserve to specimen for other testing.
2. Shear: One shear test will be conducted on each end of the beam for a total of two shear tests. The bearing dimensions and locations of the tested end should match the actual beam bearing expected at the abutment of the demonstration bridge.
3. Transverse tests: Top flange sections are expected to be retrieved using saw cuts to create small specimens of the top flange in order to create the longitudinal UHPC closure pour connection between the pieces for further testing similar to that described below.

Small specimens are being created for the purpose of verifying specific design assumptions. The small specimen testing including the following:

1. Punching shear: It is essential for the waffle deck skin to be able the transfer wheel loads to the ribs of the waffle deck. This test will demonstrate whether to rib spacing of 500 mm is adequate, or needs to be reduced to a smaller spacing.
2. Negative moment in the deck: Once the wheel loads are transferred to the ribs of the waffle deck, the deck is assumed to act like a series of T-beams transferring the deck loads to the girder webs. This test will further help to demonstrate whether to rib spacing of 500 mm is adequate, or needs to be reduced to a smaller spacing.
3. Positive moment in the deck/joint: This test will also prove the adequacy of the joint pour and the design connection capacity.
4. Web bending: The lateral bending of the beam web may be a critical aspect during shipping, erection and the casting of the joint, especially if heavy equipment is used on the deck before the longitudinal joint achieves adequate strength. After the joint has set up and the deck has gained continuity, bending in the web is not anticipated to be critical. This test will provide insight into the shipping and handling stability of the beams during the construction process.

Figure 9. Web Bending Small Specimen

DISCUSSION

The decked I-beam satisfies the design criteria as currently known for UHPC. While certain elements theoretically meet design requirements, they should be tested experimentally. Prototype pieces and small specimens are currently being cast for element testing. The web width of only 100 mm (3.9 in.) is being tested for shear and diagonal tension behavior as well as overturning due to the top-heavy nature of the shape. Multiple tests are being conducted of the waffle deck with ribs spaced at 500 mm (19.7 in.) such as punching shear and flexural capacity, both positive and negative, including the closure pour joint capacity.

The various innovative details discussed in the preceding sections allow for the structural elements to be precast with the objective of meeting ABC requirements.

Casting of the structural components, including a full-size DIB for testing is planned to be completed by the time of this conference. The conference presentation will therefore be expected to show photos of production, handling and testing of the bridge components.

CONCLUSION

The proposed series of UHPC Decked I-Beams (UHPC DIB) is shown to be applicable to spans up to 60 m. These shapes, along with the formwork concepts developed offer ease of production and construction while still providing superior long-term performance.

Summarized below are some specific areas that might be worth further research for a variety of reasons, such as precast production, cost savings or code development.

1. According to FHWA, UHPC should not see load application below 100 MPa (14 ksi) compressive strength. This includes transfer of the strand forces at the time of release. The time required to reach 100 MPa may require the product to remain in the precast bed for several days slowing production turn-around.
2. Tensile strength at release used in calculations was assumed to be proportional to compressive strength gain. According to FHWA, tensile strength within UHPC develops faster than compressive strengths, but no guidance is provided. While debonding of strand was not required in this example, with the proportional tensile strength assumption future products may require debonding unless guidance for using higher tensile strengths is developed.
3. Limited data is available on the punching shear capacity of UHPC. Additional data on punching shear may allow the deck “plate” thickness to be reduced, leading to a significant reduction in the amount of UHPC material required.
4. Further research into prestressing local effects utilizing the tensile strength of UHPC could led to a reduction of the end bursting and strand confinement reinforcement, specifically the requirements of CSA Article 8.16.3.2.
5. A number of creep tests have indicated that the creep of UHPC is much less than conventional concrete (Russell 2013). Lower creep values will result in reduced prestress losses which can be detrimental if relied on to reduce stresses in restrained members. More testing should be performed to get a better handle on this material property.
6. The capacity provided in the deck overhang seems to justify up to a TL-4. However, testing is recommended before going to the higher level.

ACKNOWLEDGEMENTS

The authors thank FACCA, Inc., Ontario, for financial support of the study reported in this project. The employees of FAACA have demonstrated ingenuity in creating a forming system for this unique UHPC DIB shape that allows the product to be made in one stage without a “cold” joint. A number of MTO personnel have provided the motive behind the development of the UHPC DIB and continuing support of the progress made so far. William Nickas, Director of Transportation at the Precast Prestressed Concrete Institute (PCI) has been an inspiration and a strong driving force for precast industry adoption of the new and exciting UHPC material in full sized members.

REFERENCES

1. Canadian Standards Association (CSA), “Canadian Highway Bridge Design Code,” Canadian Standards Association, 2014.
2. Aaleti, S., Petersen, B., and Sritharan, S., “Design Guide for Precast UHPC Waffle Deck Panel System, including Connections,” FHWA, U.S. Department of Transportation, Report No. FHWA-HIF-13-032, 2013.
3. Russell, H. G. and Graybeal, B., “Ultra-High Performance Concrete: A State-of-the-Art Report for the Bridge Community,” FHWA, U.S. Department of Transportation, Report No. FHWA-HRT-13-060, 2013.
4. American Association of State Highway and Transportation Officials (AASHTO), “AASHTO LRFD Bridge Design Specifications,” American Association of State Highway and Transportation Officials, 2014.
5. Crane, C., “Shear and Shear Friction of Ultra-High Performance Concrete Bridge Girders,” Diss. Georgia Institute of Technology, 2010.