ACROW TEMPORARY VERTICAL LIFT BRIDGE ON THE SOUTHERN BOULEVARD (SR 80) BRIDGE REPLACEMENT PROJECT IN WEST PALM BEACH, FLORIDA

Michael J Parciasepe, P.E., Acrow Bridge, (973) 244-0080, mparciasepe@acrow.com

INTRODUCTION

During routine inspection work on the existing Twin Leaf bascule bridge, that carries Southern Boulevard (State Route 80) over the Intracoastal Waterway, the structure was deemed Structurally Deficient. In 2009 a Project Development and Environmental study was conducted with input from the public, as well as local elected officials, and at that time, the Florida Department of Transportation (FDOT) began making plans to replace the existing structure. In addition to its structural issues, the bridge was no longer compliant with current design standards, for vehicular, pedestrian, cycling and marine traffic.

Figure 1- Photo of the Existing Twin Leaf Bascule

In the initial design phases of the new bascule bridge, it was determined improvements had to be made to the flow of vehicular traffic on the bridge and marine traffic below. Special emphasis was given to widen the existing roadway, which would allow for a safer environment for the area's pedestrian and the heavy volume of bicycle traffic, while also reducing cyclist's impact on vehicular traffic. It was also decided the new structure would have an increased vertical clearance over the waterway while the bridge is closed, which would reduce the number of bridge openings required for marine traffic.

REPLACEMENT BRIDGE DESIGN

The significant improvements planned for the new structure also lead to major changes to the existing bridge's substructure. One option was to place the new roadway adjacent to the existing bridge, maintaining traffic on the existing bridge until the new roadway and alignment was completed. This method was used on the Flagler Memorial Bridge replacement project, just north of the Southern Boulevard bridge. However, during construction of the replacement bridge on the Flagler Project, vibrations caused the foundations of the existing bridge to become compromised, requiring a series of closures and repairs, which lead to large, unforeseen monetary and public impacts. It was because of that experience that FDOT chose to avoid that option.

Figure 2 - Rendering of the Replacement Bridge

The agreed-upon solution, developed in collaboration between FDOT and AECOM Tampa, was that a temporary detour structure would be built adjacent to the existing span. After the construction of the temporary roadway, traffic would be shifted onto the detour roadway, allowing the free flow of vehicular, marine and pedestrian/bicycle traffic while the existing structure was demolished and the new structure reconstructed. One portion of this detour roadway would be a moveable structure in order to maintain the marine traffic in the Intracoastal Waterway. When it came time to utilize a temporary moveable structure, FDOT relied on the positive experience from a previous project they completed in St. Augustine, Florida, which utilized a temporary vertical lift bridge provided by Acrow Bridge.

TEMPORARY MOVEABLE BRIDGE DETAILS

AECOM determined the temporary moveable structure would be a vertical lift bridge, but with the horizontal clearance of the navigable channel of 125 feet, set to match the width of the new structure. In order to match the current conditions, clearance under the lift span was to be 14 feet with the lift span in the closed position. It was determined that when fully raised, the main span vertical clearance needed to be 65 feet. Using these parameters, Acrow determined that the lift span structure would need to have a main (lift) span of 170 feet in length to accommodate fenders and pier construction. The roadway would be 30 feet wide and utilize two 12-foot-wide lanes and 3-foot shoulders on each side of the roadway. A 5-foot-wide footwalk would be cantilevered off the North side of the structure. Four 75-foot-tall towers, one at each corner of the roadway would support the cross-head assemblies which house all of sheaves and lift span's counterweights. A gantry structure linked the two cross-head assemblies, and functions as the support for the lift span mechanical drive system and a maintenance walkway linking the East and West towers for maintenance.

Figure 3 - Photo of the Acrow Temporary Lift Span

The 170 ft long lift span is comprised of standard Acrow Panels and floor beams, with an Acrow Truss Construction of Double Double Reinforced Two Super Heavy (DDR2SH). This denotes that there are two truss lines per side of bridge, two stories of trusses per truss line, and that both truss lines are reinforced with super heavy (6 inch) reinforcing chords on top and bottom. Acrow's standard orthotropic steel deck units with a pre-applied epoxy aggregate anti-skid overlay are used to save weight on the lift span. Using the epoxy aggregate coating, rather than asphalt represents a weight savings of 20 lbs./ft² over 2" thick asphalt. The footwalk on the north side of the lift span uses the same epoxy coating as the vehicular roadway. The total weight of the lift span is 466,000 lbs. In June of 2016, the project was awarded to Johnson Brothers Corp., a division of Southland Holdings, Acrow was a subcontractor to Johnson, and in April 2017, construction of the detour roadway began. Acrow's first delivery of components arrived in December, 2017.

By utilizing their prefabricated, pre-engineered modular system to make up a majority of the components in the towers, lift span, and gantry, Acrow was uniquely suited to provide the superstructure required for the temporary vertical lift span in a fraction of the time and at a cost savings, compared to the a conventional truss or girder temporary lift span. The modular design of the structural components also leads to an accelerated construction schedule.

Counterweight System

A counterweight system is used to reduce the amount of power required to raise the lift span, as in most lift bridges. Precast concrete counterweights are used, and installed within the towers. The cross section of the counterweights is such that they fit within the counterweight guides which are installed on the inside of the towers. The counterweights sizes are calculated to set up a 1,000 lb. imbalance, which equates to 108,000 lbs. per corner on the non-footwalk side and 123,000 lbs. per corner on the footwalk side. The counterweights are supported by a six 1 ¼ inch 6x36 WSC Fiber Core ropes per corner. The counterweight ropes run through a sheave cassette system housed within the cross-head assemblies and utilize 12 60-inch McKissick Roll Forged Sheaves per corner.

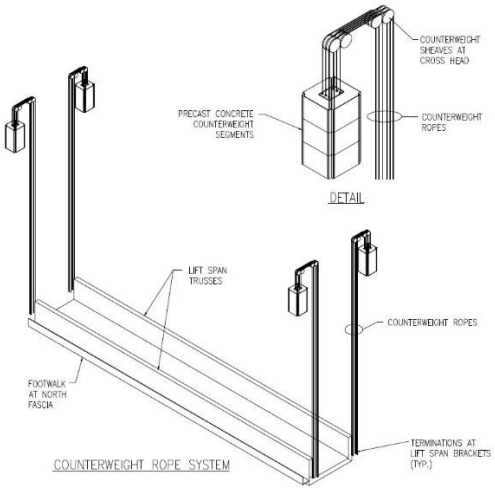

Figure 4 - Sketch of the Counterweight Rope System

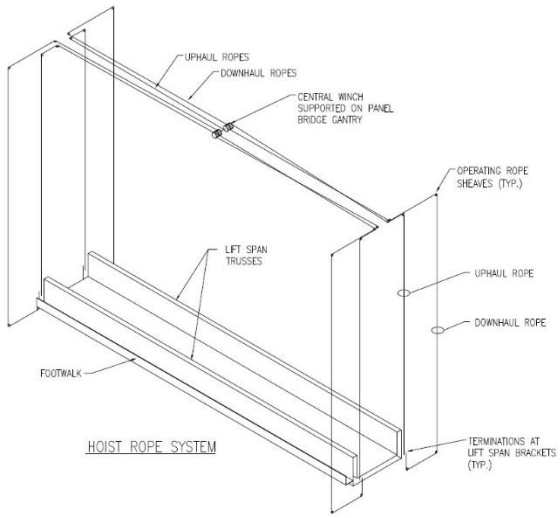

Figure 5 - Sketch of the Uphaul/Downhaul Rope System

Uphaul/Downhaul System

To operate the lift span an uphaul system is used to raise the span and a downhaul system is used to lower the span, even though the system is span-heavy. The low net weight of the span, due to the counterweight system, allows for only a small electric motor to be used to lift the span. The 40 HP at 850 HP motor is connected to a Falk 238:1 reducer which spin s single shaft with four wire rope drums. The mechanical designer and supplier on this project were Steward Machine Co, located in Birmingham, AL.

On each drum there are two 1-inch 6x36 WSC Fiber Core Ropes, one uphaul rope and one downhaul rope. On each of the uphaul and downhaul ropes there is a safety arm in place to protect the bridge and rope system. If the load in the operating ropes is ever 25% over the safety arm trips a limit switch to shut the system down. The safety arm for the downhaul ropes are located in the tower bases, and the uphaul rope safety arms are located in the cross-head assemblies.

CONSTRUCTION SEQUENCE

The Acrow superstructure was delivered and assembled at the Port of Palm Beach, approximately 6 miles north of the site on the Intracoastal Waterway, and then delivered to site via barges. The ability to pre-assemble the lift span off-site significantly reduced the disruption to the public and marine traffic at the site, and also allowed construction to flow more smoothly by distributing the work between two separate locations. In December 2017 the towers were delivered and assembled in the Port of Palm Beach, once completed the towers were loaded onto barges and sent to the jobsite. The base units were installed,

checked for location, plumbness and level and grouted into place. Once the tower bases were placed the rest of the tower sections were added to them, and the counterweight units were installed.

Figure 6 - Photo of the Towers Installed

After the towers and counterweights were installed, the assembly sequence was cross-head assemblies, gantry section, machinery pallet, and lift span. Over the course of 4 months, the Acrow Bridge was fully assembled and installed. During a 5-day channel closure in April, 2018, the Lift Span was installed and commissioned so the contractor could operate it as required. This 5-day closure was the only major disruption to vehicular or marine traffic. The temporary lift span was opened to traffic in May of 2018, and will be removed upon completion of the replacement bascule bridge construction.

Figure 7 - Current Photo of the Project