ABC REPLACEMENT OF CSX BRIDGE OVER THE CAHABA RIVER

Amrithraj Anand, E.I.T., Heath & Lineback Engineers, Inc., (770)424-1668, aanand@heath-lineback.com
John Heath, P.E., Heath & Lineback Engineers, Inc., (770)424-1668, jheath@heath-lineback.com
Brian Adams, P.E., Heath & Lineback Engineers, Inc., (770)424-1668, badams@heath-lineback.com

ABSTRACT

A unique accelerated bridge construction approach was employed to replace the CSX Railroad Bridge over the scenic and pristine Cahaba River in Elvira, AL. The existing, original three-span structure designed in 1907 with an 80'-180'-80' span arrangement consisted of plate-girder end spans and a 40'-6" deep through truss for the main span was replaced with three new deck plate girder spans using an ABC approach that involved both longitudinal and transverse slides. The project team utilized state of the art equipment and design methodologies, ranging from Self-Propelled Modular Transporters (SPMTs), self-climbing towers and drone lidar scanning to comprehensive finite element modeling, staged construction analyses and 3D modeling, to carefully study and devise a replacement and demolition procedure. Although unexpected site conditions, including two rain events and a storm with 70-mph winds, challenged the replacement schedule, the rail line was opened 96 hours after initial closure. This paper describes the development and execution of the complex roll-in replacement of the railroad bridge with focus on the construction engineering.

PROJECT BACKGROUND

In 2016, CSX made the decision to replace their bridge over the Cahaba River near the city of Elvira, AL. The bridge is located on the main CSX freight rail line connecting Birmingham and Montgomery. At the bridge site, the rail track and bridge are aligned essentially North-South, and the bridge crosses the Cahaba River immediately downstream of the confluence with Buck Creek. The river valley is approximately 60 ft. deep. The river is usually only a few feet deep but rises quickly during rain events. There is exposed rock near the bridge. The site is constrained by private woodland and is only accessible via CSX Right of Way (R/W). The Cahaba River is the longest substantially free-flowing river in Alabama and is among the most scenic and biologically diverse rivers in the United States. It is closely watched and preserved by the Cahaba River Society.

Figure 1: Original bridge designed in 1907

The existing bridge was a 111-year-old, 3-span structure designed for two tracks, each offset 6 ft. 6 in from the centerline of the bridge. The two short end spans were comprised of three simply supported built-up plate girders with a span length of 80 ft. The main span was a 180 ft. through truss bridge with a maximum depth of 40 ft. 6 in. CSX operates the freight line as single track in the vicinity of the bridge.

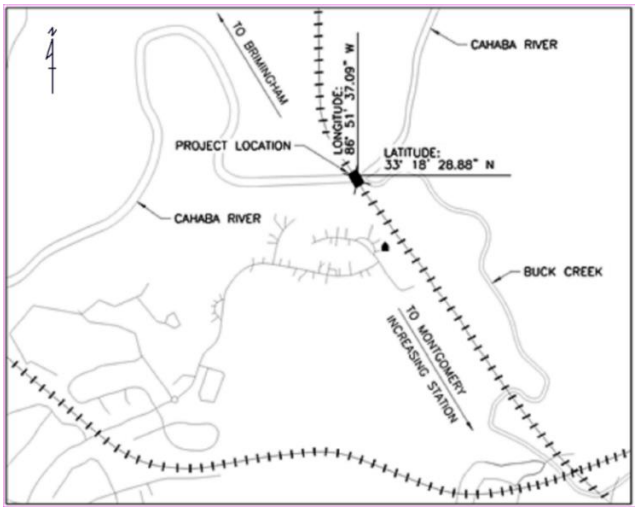

Figure 2: Project Location

CSX had determined the structure was at the end of its service life and should be replaced. TranSystems Corp. was commissioned to design a replacement structure. The replacement design was a new superstructure to be built upon the existing piers and abutments that would be re-used in the replacement bridge. The superstructure was designed as three simply supported spans (80 ft.- 180 ft.- 80 ft.) of welded plate girder supporting a single track. The new spans were designed to be centered on the existing operational track requiring a 6 ft. 6 in. lateral shift of the existing bridge centerline.

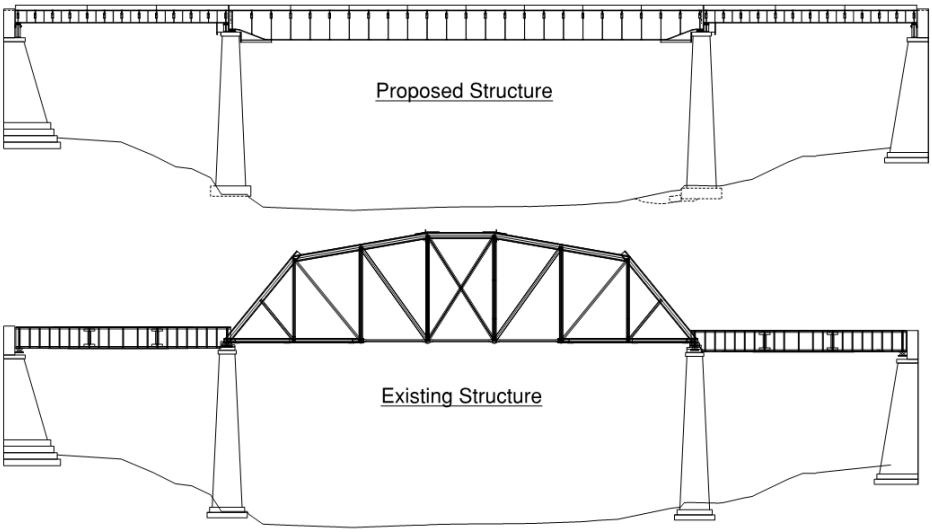

Figure 3: Elevation of proposed and existing structures

The construction documents included a requirement that temporary construction impacts to the river and its banks be minimized and established a 56-hour track closure period for demolition and replacement. The construction documents also required all construction access to be along the Railroad R/W with a nominal construction easement near the bridge site.

CONCEPT DEVELOPMENT

Brasfield & Gorrie General Contractors (B&G) proposed an innovative approach to replace the main span that involved rolling in the new span inside the envelope of the existing truss, using self-climbing towers to support both the new span and the truss, cutting the ends of the truss off, laterally sliding into alignment and lowering the new span into place. This low impact method utilizing only two lines of shoring and allowing the replacement to be done in the given time frame, won them the project. B&G retained Heath and Lineback Engineers, Inc. (H&L) as their designer and selected Burkhalter as the jack-up shoring, heavy hauling and sliding equipment subcontractor.

The replacement plan was:

Ahead of the 56-Hour Closure Window and under train traffic:

1. Build the new superstructure spans complete in lay down areas adjacent to the track area behind the abutments.
2. Modify the truss as necessary for the staged construction/demolition/removal.
3. Install, but do not engage, self-climbing shoring at the second nodal points from the ends under the new struts.

During the 56-Hour Closure Window:

1. Remove and replace End Span 3 using cranes placed near the bridge end.
2. Roll in the new Span 2 superstructure into the existing through truss span from the north side over Span 1.
3. Engage the jack-up shoring to support the new and old span 2 on the shoring.
4. Remove and replace End Span 1 using cranes placed near the bridge end.
5. Cut out Truss Panels 1 and 7 and laterally slide the new Span 2 into position.
6. Lower the old truss after and the new span until the new span engages the new bearings.
7. Remove the top bracing of the old truss and lower it further until the truss clears CSX operational limits.

After the 56-Hour Closure Window and under train traffic:

1. Complete lowering of the old truss and demolish.

Figure 4: New span staged inside the existing truss, transported using SPMTs

CSX awarded the project to B&G. B&G retained H&L as their construction engineer and Burkhalter Lifting, Rigging and Transport Professionals, (Burkhalter) was hired as a subcontractor to provide the self-climbing shoring, sliding and the heavy hauling services.

SCOPE OF CONSTRUCTION ENGINEERING

H&L was tasked with the role of “giving wings” to the innovative concept. All details of the roll-in, load transfer, modification to the truss for removal, analysis and strengthening for lateral stability of the truss

after bracing is removed and developing a procedure for the change out and demolition would be H&L's responsibility. The work included consideration of the geometrical constraints, capacities of the temporary structures under the various loading configurations (the new Span 2 weighed 1000K complete and the old truss weighed 900K complete), capacity of the permanent structures to withstand the temporary loads during the launch and installation, capacity of the cranes to support operations and the demolition/construction sequences.

H&L identified the following key design stages:

- Development of a roll-in system to transport the new bridge into the existing truss.
- Modifications to the truss for removal (addition of diagonal strut)
- Development of a Load Transfer Procedure
- Examination of truss stability during bracing removal
- Concrete footing design for the jack-up towers and development of the Demolition Plan

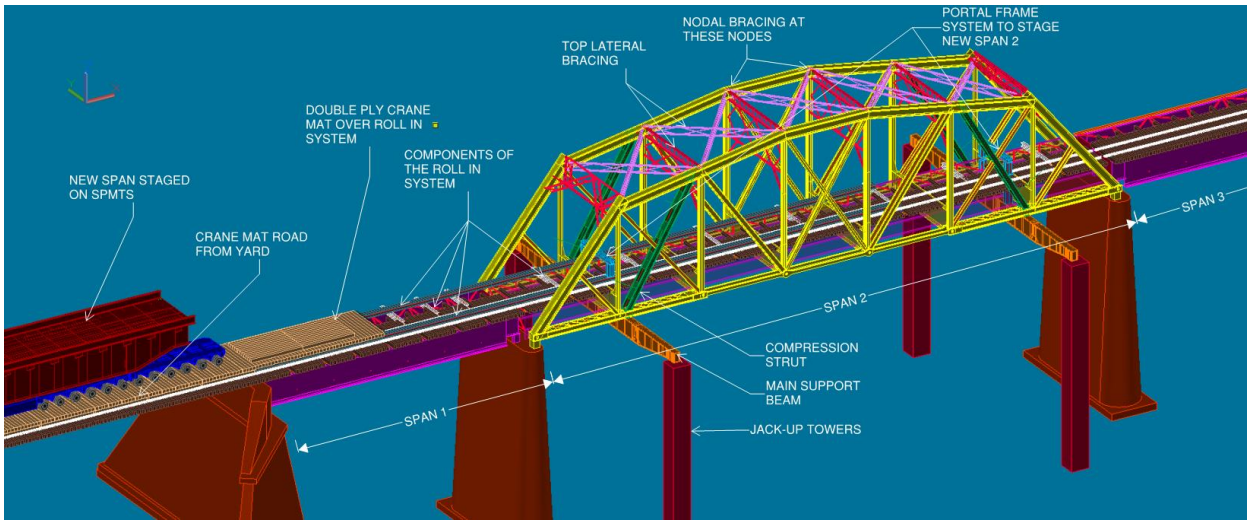

Figure 5: Components of the replacement scheme

H&L would also design all the critical crane picks and review Burkhalter's calculations for the Jack-up System. After the team completed detailed analysis of constructability, structural capacity and geometrical constraints, the original plan was refined as discussed herein.

DESIGN ISSUES AND SOLUTION

Development of Finite Element Model

A comprehensive finite element model was used to study the stability of the truss during bracing removal, to study the interaction between the new span and the existing bridge due to differential deflections during roll-in and to calculate forces on the truss chords during various stages of the bridge replacement.

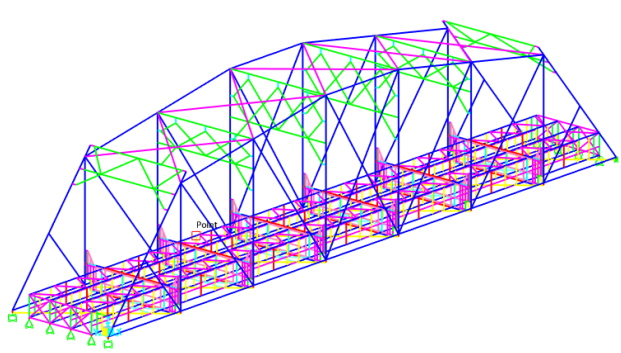

Figure 6: CSiBridge FEM model of the Truss

Analyses were performed on three-dimensional finite element models developed using CSiBridge 2019. Truss chord members and all top and bottom lateral bracing members were modeled as frame elements. The floor beam and stringers were modeled with shell elements for the webs and frame elements for the flange. Rigid links were used to create offsets cause by gusset plates to maintain member geometry. Member section geometry was carefully extracted from the exiting plans to create custom frame sections in CSiBridge using the section designer.

The truss chords and diagonal strut/tie members were lattice type built-up sections. A reduced bending stiffness for these members was calculated as studied by Duan et al. (1). Since stability was being studied, the stiffness parameters would need to be accurate. Hence, for members with lacing, a reduction factor was applied to the calculated Moment of Inertia where the lacing provides shear flow between flanges. Lacing weight is accounted for in the model through the application of mass modifiers to the frame members.

3D Model and Point Cloud

A 3D model of the bridge was created in AutoCAD to communicate designs more efficiently and to aid in conflict resolution of components. This model was created by extracting the centerline geometry from the finite element Analysis model and extruding the appropriate sections. The 3D model was then used to extract line templates for the final plans. B&G performed a drone lidar scan of the structure during early stages of planning. The point cloud generated by the lidar scan helped the design team rapidly verify existing plan dimensions and calculate clearances.

Roll-In System

The team examined all possibilities for the transverse positioning of the new Span 2 during the roll-in. It quickly became apparent that the span would have to be rolled in centered on the truss due to very tight clearances and to keep load distributions even on the approach span and the truss. It would then have to be translated (slid or rolled) sideways to its final position centered on the existing track.

Initially the plan was to roll the bridge in on several Hillman rollers using a hydraulic skid system. H&L quickly identified that the relative stiffness interaction of the new and old spans during roll-in was a concern that needed to be studied. The finite element model was used to capture the interaction of the truss and approach spans during roll-in. After analyzing the critical stages during the roll-in it was clear that the hard points developed at the piers and abutments would potentially cripple the Span 2 girders and a hydraulic jack system would be required to equally distribute loads over at least 10 rollers. B&G evaluated this option and after discussion with Burkhalter, elected to use Goldhofer SPMTs as the carrier during roll-in. The SPMTs provided multiple axles with hydraulic adjustments capable of protecting the new superstructure girders throughout the roll-in by ensuring equal axle loads.

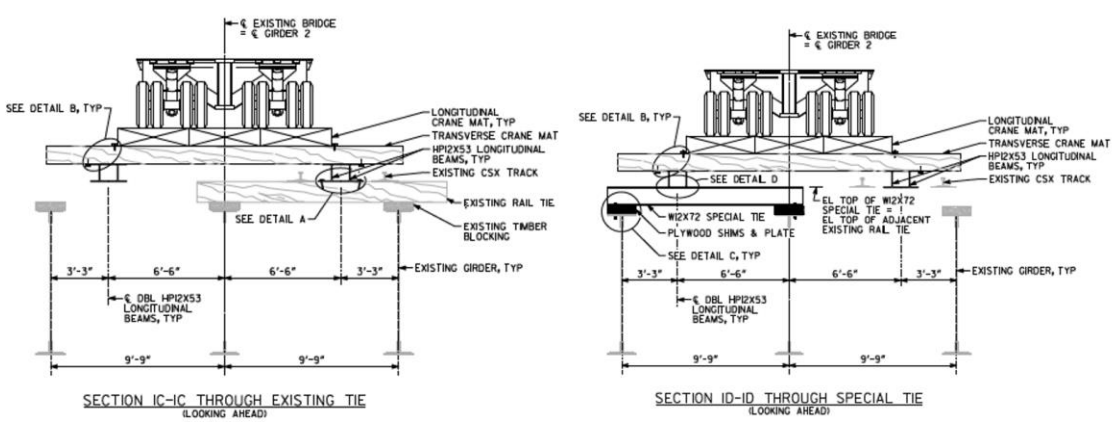

Figure 7: The roll-in system at the approach span

However, the SPMT system added loads and geometrical constraints that had to be considered. The SPMTs required approximately 3 ft. 6 in. of the available vertical clearance between the deck and the truss portals and a wide travel path. The SPMTs are heavy (57Kips/unit). H&L determined that the load demand on the approach span girders during roll-in was significant, and a method was needed to share the load to all three girders of the span. H&L developed a load distribution system hybrid steel beam/crane mat design that met the clearance constraints, provided adequate riding area for the SPMTs and distributed loads equally to the three approach girders and the four stringers on the truss. The system comprised of simply supported transverse spreader beams spanning two of the three main girders and special continuous longitudinal beams (built-up member fabricated from a pair of HP12x53's) which in turn support a double-ply timber crane matting.

Figure 8: The longitudinal built-up beams have been installed and other components are being flown into place

Compression Strut Design

The main span was a seven-panel Pratt Truss. In order to create clearance to lower the truss it was necessary to remove Panels 1 and 7 and temporarily support the truss at Panel Points 2 and 6. Therefore temporary compression struts needed to be added to the structure. In the early stages of concept development, the design team identified that the design of a practically constructible strut for the new load path would be a challenge. The existing steel, manufactured in the early 1900s, was not weldable, which meant the connections had to be bolted. Further, bolted connections were difficult due to the built-up sections containing rivets and an assortment of angles, channels and plates. The strut would also have to bridge the existing tension chord at the panel. Given the challenging constraints, it was clear that the strut could only carry the weight of the truss alone. The new bridge could not be placed on the truss during the lowering operation.

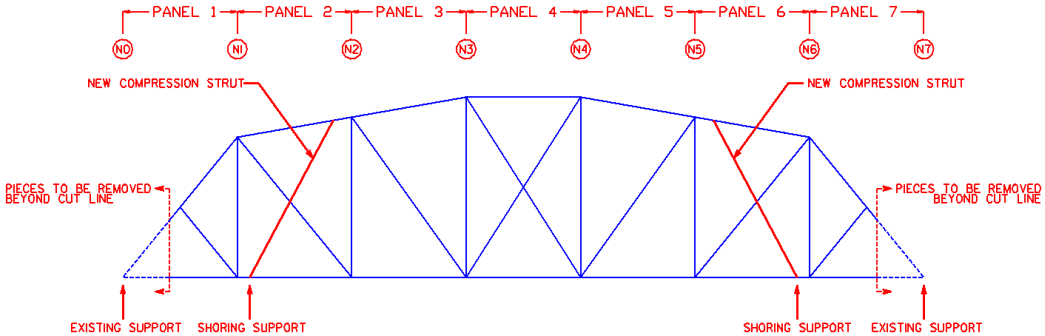

Figure 9: Schematic showing strut locations

The concept strut contained two heavy channel sections tied together by batten plates and wrapped around the tension chord. The top and bottom connections were heavily reinforced to prevent any local failures of the truss chords. The concept was detailed in a 3D model and a construction procedure was developed. The 3D model helped immensely in communicating the details and the construction sequence with the design team. B&G provided their input and agreed that the design was feasible. The final design was done in 2D plans using a template extracted from the 3D model. H&L provided detailed final drawings at a shop level for construction. The strut was later constructed to fit up with no issues.

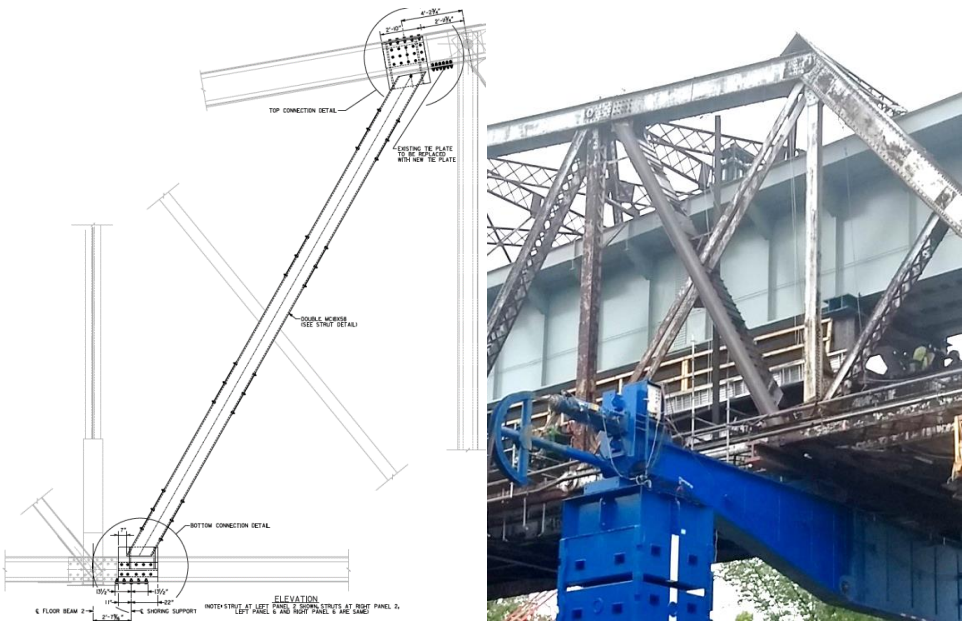

Figure 10 & 11: Final drawing of the strut & The strut as constructed on site

Load Transfer System – The Portal Frame

The need for the load transfer system that would carry the new bridge loads directly to the shoring system was twofold: 1) the temporary compression struts could only carry the weight of the existing truss; therefore, the weight of the new superstructure had to be separately transferred to the jack-up system. 2) The SPMTs had to be driven out once the new span had been delivered into place.

Figure 12: The new bridge has been staged on the portal frames and the SPMTs have been driven out

A “portal frame” system was developed that would tie into the roll-in system and be supported on the shoring. The tie-in to the roll-in system was critical for stability. Using cables for stability was not feasible

as the differential deflections during load transfer would make it impossible to keep the cables tensioned at all times. After roll in, the frame served as a base upon which the SPMTs would set the new bridge. The SPMTs would then drive out of the portal opening.

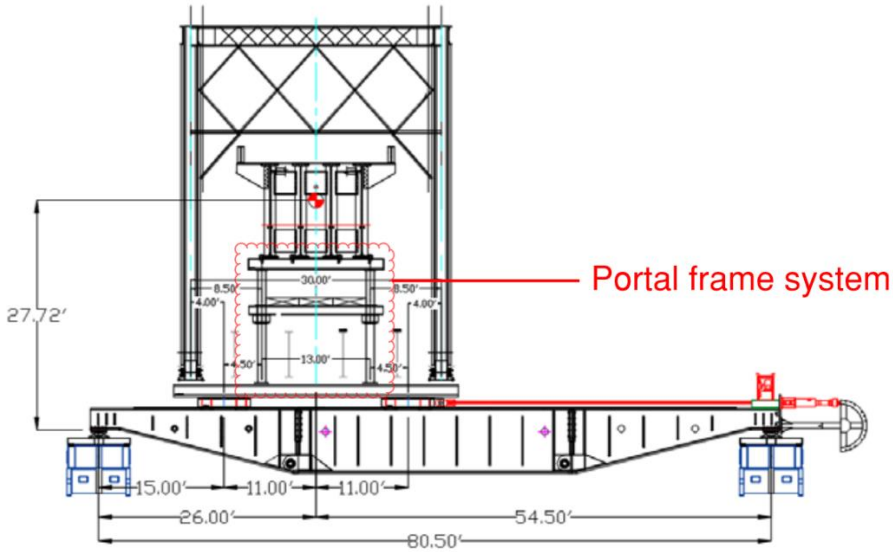

Figure 13: The portal frame system

The tie-in into the shoring system provided slight complications. The portal frame columns were connected and transferred load through the continuous longitudinal beams. When the load was transferred through these columns, the truss would bounce back up as the load was relieved off the truss and transferred to the shoring. But the “spaghetti” longitudinal beams of the roll-in system on the truss would remain pinched at the column-beam connection. Analysis of the truss revealed that if this load transfer was done in one action, it would cripple the roll-in beams as shown in Figure 14.

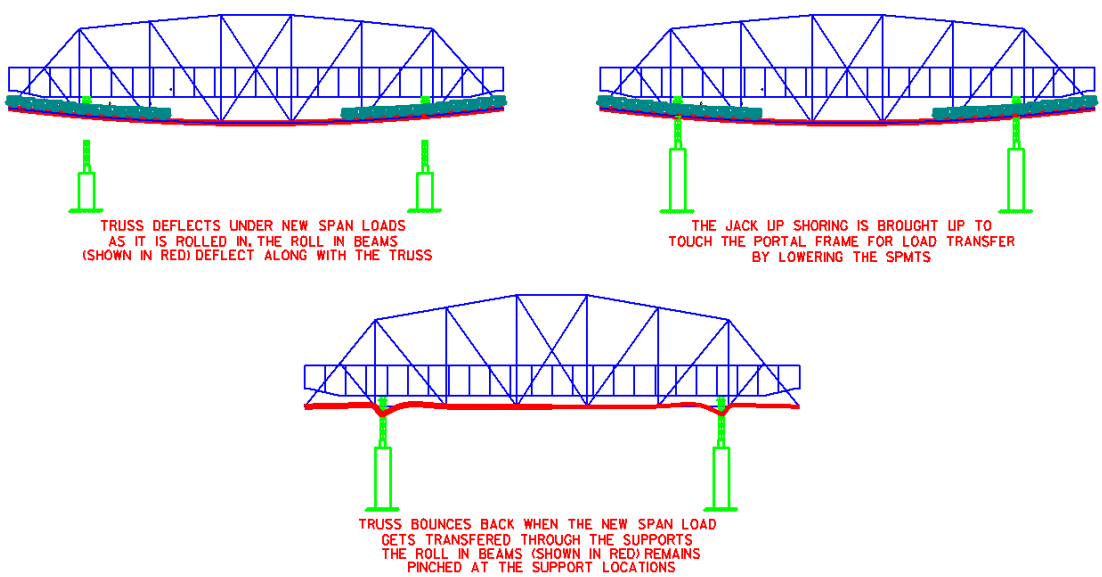

Figure 14: The theoretical crippling of longitudinal beams under the absence of a load transfer procedure

A detailed load transfer procedure with calculated theoretical deflections using the FEM Model was hence developed to solve this issue. This involved alternating rounds of lowering the SPMTs and raising the shoring tower heads. When the SPMTs lower, an amount of load gets transferred from the truss to the

shoring towers, causing the truss to bounce up and introduce bending in the roll-in system. In the next step, the shoring towers are then raised to correct for this bounce back and relieve any load in the roll-in system. This process was continued until all the load was transferred to the shoring tower system.

Truss Stability

To lower the truss below the new bridge, all the top lateral and portal bracing of the truss would need to be removed. This leaves the top compression chord unbraced over a length of approximately 150 ft. Further, review of the plans revealed that the nodes of the truss were true pins with no moment continuity. This meant that without modifications, the chord would buckle out of plane like a “chain link” under load. Hence modifications to the truss were carried out to allow the lateral bracing to be taken out. To provide moment continuity, plates were designed to be added to the top of the top chord at nodes, and a brace was designed to improve the flagpole bracing action of the posts.

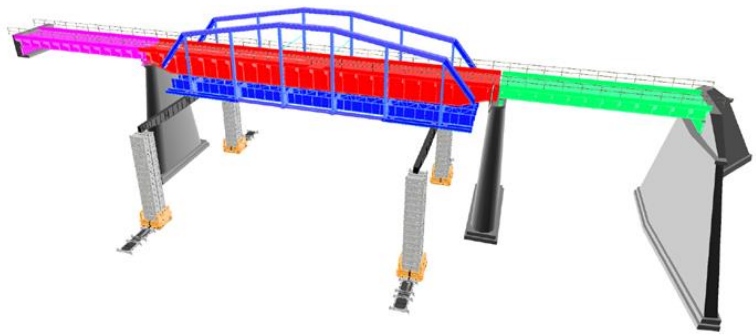

Figure 15: Lowering stage of the concept replacement procedure.

The 3D FEM model was used to conduct a stability study. A bracing removal procedure was developed to remove the bracing in stages: 1) All the portal bracing was removed and all the top lateral bracing was removed except the one in the middle panel. 2) The truss + new span 2 system was lowered until new span 2 engaged its bearings.3) the truss was lowered further until the new bridge just touched the lateral bracing in the middle bay. 4) Temporary K-Braces were added under the new bridge. 5) The middle bay lateral bracing was removed and the truss was lowered all the way for demolition. The sequence was developed via Eigenvalue buckling analysis on the FEM model for each stage of the procedure. The bracing and the stability modification would be designed for accidental side loads during the slide and wind loads.

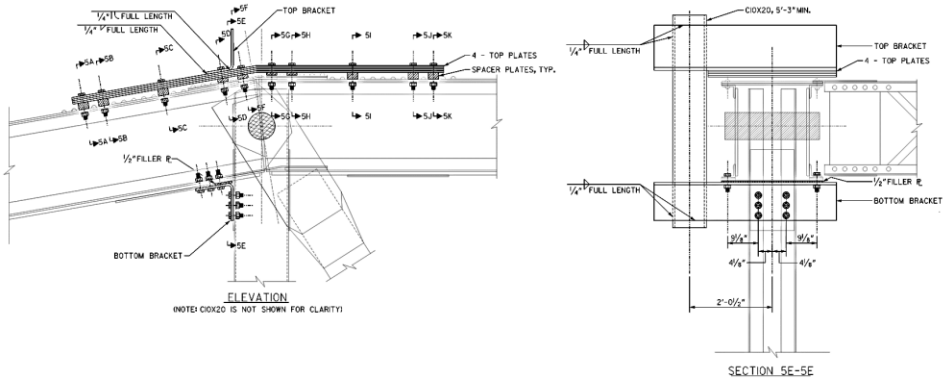

Figure 16: Elevation and Section of the node reinforcement

Truss Demolition

After the truss was lowered under the new span, it had to be removed and demolished. Limited access to the truss sitting in the middle of the river valley made it difficult for the cranes to pick the trusses whole. The truss therefore needed to be picked in pieces and had to be supported at all panel points to relive chords off the load so that they could be cut. To reduce impact to the river while adding supports in the river bed, a scheme was developed based on using rip rap filled bags placed in the river to provide an even base for

the shoring stands with no disturbance to the rock. The rip rap bags could be easily removed after demolition without any disturbance to the river bed. During discussions, Burkhalter identified the availability of pipe stands from a different project. H&L incorporated these stands and designed a braced shoring system for the truss to be supported on. The base of the towers were designed using a combination of crane mats and HP sections to distribute the loads.

The supports utilized lean-on bracing for ease of construction and to accommodate any support settlement. As seen on Figure 17, only the middle bay was designed to have diagonals and the outside bays would transfer the shear to the middle diagonals. This would also help accommodate the inevitable differential settlement between the tower rows as the outside bays could move vertically. To ensure that no towers were overloaded, a load transfer procedure was developed using a combination of shimming in stages and load monitoring on the jack-up towers. This was accompanied by a detailed truss cutting procedure that allowed the stiff truss to “unravel” onto the stands. The individual cut pieces were light enough for the cranes to reach from their stations.

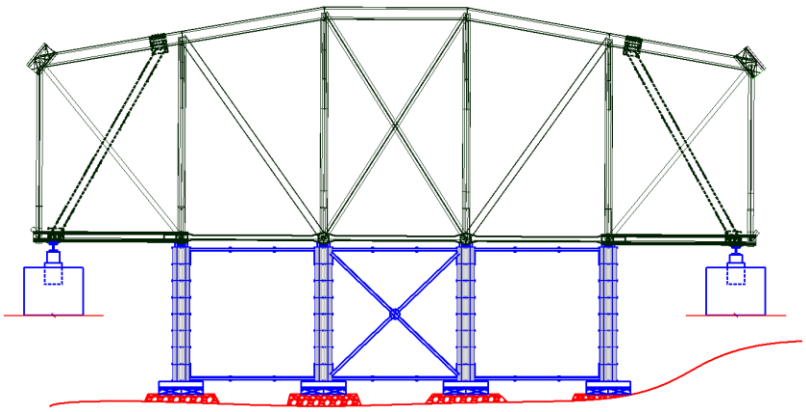

Figure 17 Shoring system for truss demolition

CONCLUSION

The unique ABC approach employed in this project presents a viable solution for the replacement of ageing steel truss bridges many of which are railroad bridges that would require replacements to be carried out in short periods.

Figure 18: New bridge after changeout

REFERENCES

1. Duan, L. & Reno, M. & Uang, Chia-Ming. (2002). *Effect of compound buckling on compression strength of built-up members*. Engineering Journal. 39. 30-37.