INTERFACE SHEAR BEHAVIOR OF UHPC WITH AND WITHOUT SUPPLEMENTAL REINFORCEMENT

Zachary B. Haber, Ph.D., Federal Highway Administration, (202) 493-3469, zachary.haber@dot.gov

Benjamin A. Graybeal, Ph.D., P.E., Federal Highway Administration, (202) 493-3122, benjamin.graybeal@dot.gov

INTRODUCTION

Ultra-high performance concrete (UHPC) provides numerous opportunities for innovation in the design and construction of highway bridges. For example, leveraging the advanced properties of UHPC, pretensioned girder geometries can be optimized to span distances much greater than girders composed of conventional or high-strength concretes. Optimized girders would likely include thin webs, tall sections, and large pretensioning forces. This would drive significant interface shear demand into the interface between the girder's flanges and the web. To date, little research has been conducted on the interface shear behavior of UHPC-class materials. To address this gap, the structural concrete research group at the Federal Highway Administration's (FHWA) Turner-Fairbank Highway Research Center (TFHRC) is currently executing an experimental program to evaluate the interface shear behavior of this class of materials. The first phase of the testing program examined monolithic UHPC interfaces with and without supplemental mild steel reinforcement. Tests were conducted on single shear pushoff specimens. This extended abstract briefly describes the experimental program and highlights the key findings of this research. Results are compared with existing high-strength concrete and UHPC interface shear test data and design code provisions.

EXPERIMENTAL PROGRAM

A total of five S-shaped specimens were designed and fabricated. Figure 1-a and 1-b present the specimen geometry and cross-section details, respectively. The quantity of passive reinforcing steel was the only variable investigated. Four interface reinforcement ratios were considered, which ranged from 0% to 0.98%. The interface reinforcement was composed of two-legged #3 stirrups. The tensile properties of the steel rebars were evaluated using ASTM International (ASTM) A370. The #3 bars had a measured yield strength of 55 ksi. The shear interfaces measured 12 inches tall and 7.5 inches wide, which resulted in an interface area of 90 in^2; interfaces were monolithic.

Specimens were constructed in the Structures Lab at FHWA's TFHRC. The specimen forms were built on the lab floor with the top face open to the air (shown in Figure 1-c). During construction, UHPC was placed into the form at the same location for each specimen (shown in Figure 1-c). The UHPC flowed across the interface region and into the bottom leg of the specimen. This maintained similar fiber distributions among specimens. The UHPC-class material used in this study is commercially available in the United States. The UHPC mixture was dosed with 2% steel microfiber reinforcement by volume. The fibers had a nominal length of 0.5 inches, a nominal diameter of 0.008 inches, and a minimum tensile strength of 290 ksi. The measured compressive strength of the UHPC ranged from 21.7 to 23.2 ksi; strength was measured according to ASTM 1856 on the day of test for each interface shear specimen.

Specimens were tested upright in a load frame that employed a servo-hydraulic ram capable of applying 600 kip of load. Specimens were carefully installed into the load frame so that the interface shear plane was vertically aligned with the applied load path. Each specimen was leveled and plumbed prior to being grouted in place on steel bearing pads. Load was applied at a rate of 0.05 in/min prior to rupture of the interface, and 0.1 in/min thereafter if the specimen had post-rupture load-carrying capacity. Specimen deformation was captured using a commercially available digital image correlation (DIC) system. The DIC system was used to capture interface slip and specimen rotation. Deformation measurement locations are shown in Figure 1-d. Applied load was measured using a 1000-kip load cell.

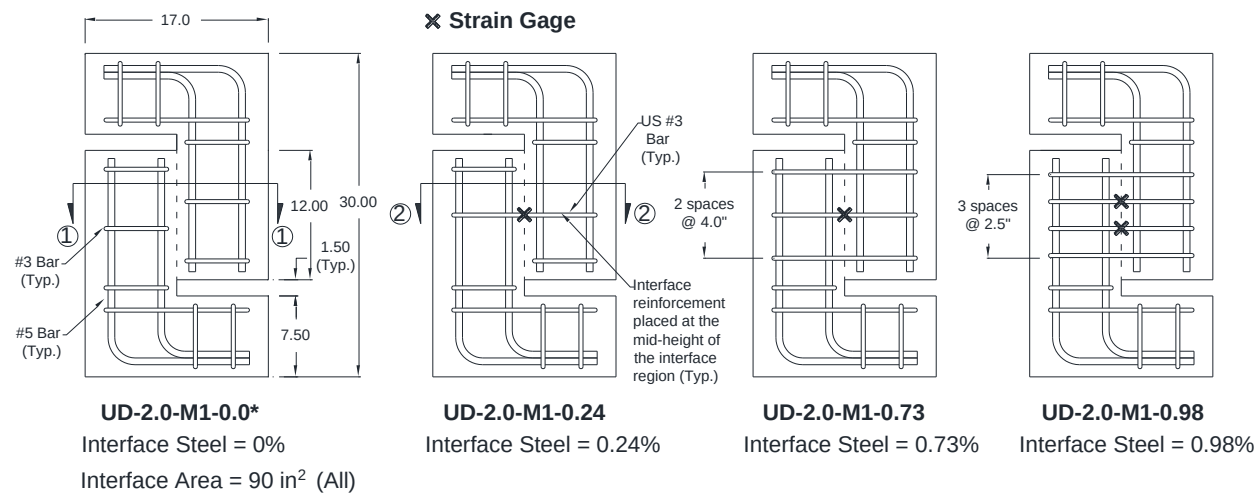

a) Specimen geometry and reinforcement layout: * Two identical specimens were tested.

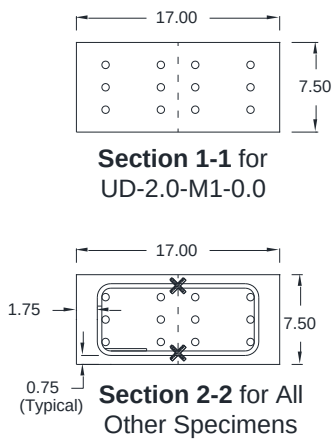

(b) Specimen cross-section details.

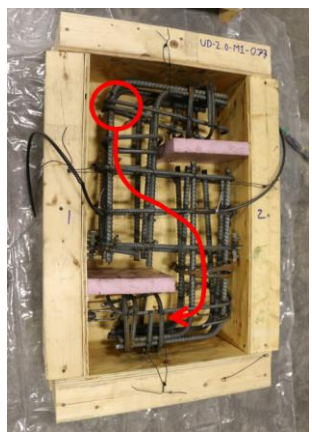

Casting location and flow direction shown in "red."

(c) Specimen construction.

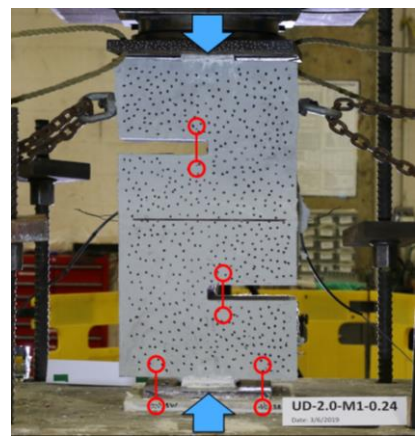

= Denotes a virtual instrument in the DIC system.

(d) Test setup and virtual instruments.

Figure 1. Specimen details and test setup (all units in inches). Source: FHWA

RESULTS

Figure 2 shows the characteristic load-slip curves for specimens with (UD-2.0-M1-0.98) and without (UD-2.0-M1-0.0) interface reinforcement. The load-slip response for all five specimens was observed to be initially linear and then softened slightly as the load increased. The UHPC showed initial cracking along the shear plane at stress levels between 1.1 and 1.6 ksi in specimens that included interface reinforcement; cracking was confirmed using strain gage data recorded from interface reinforcement. Each specimen experienced rupture of the monolithic UHPC interface either at, or shortly after, reaching peak load. Interface rupture was abrupt and resulted in significant or complete loss of load-carrying capacity.

Specimens with interface reinforcement were able to carry post-rupture loads. In these cases, once rupture occurred, the reinforcement was able to restrain the complete separation of the two L-shaped segments of the specimens. However, the two L-shaped segments did undergo noticeable deformation, which is termed "mobilization" as noted in Figure 2. The mobilization deformations ranged between 0.18 and 0.33 inches. Increasing the level of interface reinforcement was found to decrease the post-rupture mobilization. After mobilization, the load-slip behavior is governed by dowel action of the interface reinforcement, which eventually fractured (see Figure 2) as deformations became large.

The relationship between the peak shear stress and the passive clamping pressure provided by interface reinforcement is shown in Figure 3; clamping pressure is equal to the area of interface steel times the yield strength of that steel. This plot also shows relationships from previous research on high-strength concrete and UHPC; the data shown reflects monolithic, initially uncracked interfaces. The plot also shows the capacity of normal-weight concrete per the American Association of State Highway and Transportation Officials (AASHTO) Bridge Design Specification (BDS) (1). In general, the data collected in this study exhibits a proportional relationship between the ultimate shear stress and clamping pressure. However, the relation is not as significant as that found by Crane (2). The data collected herein suggests that the mild steel interface reinforcement does not significantly contribute to the interfacial shear resistance of UHPC when reinforcement ratios are below 1.0%. This is likely due to UHPC's inherently high interface shear strength. The measured interface shear strength of monolithic UHPC was approximately six times higher than that predicted by the AASHTO BDS for normal-weight concrete, and three times higher than that measured for high-strength concretes.

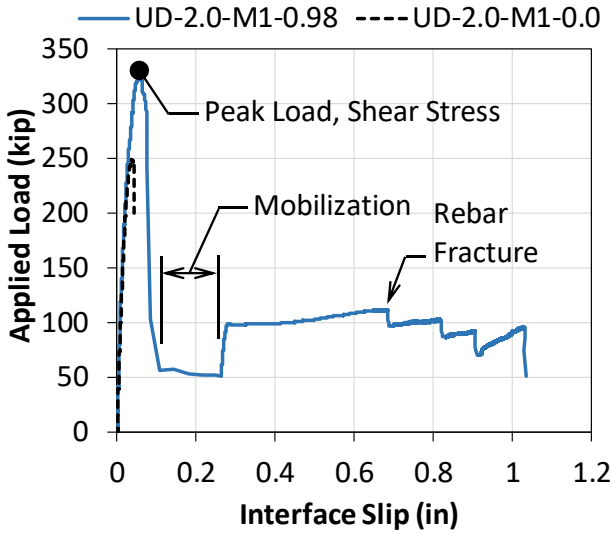

Figure 2. Characteristic Load-Slip Relations. Source: FHWA

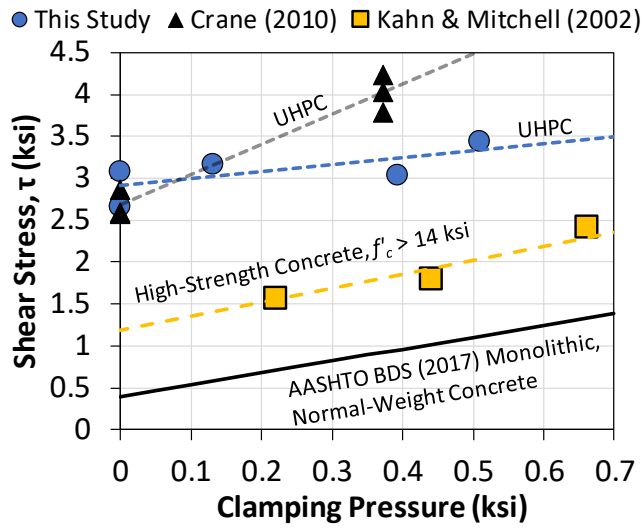

Figure 3. Shear stress vs. clamping pressure. Source: FHWA

CONCLUSIONS

UHPC-class materials exhibit interface shear strengths that are significantly higher than those exhibited by conventional or high-strength concretes in the monolithic condition. The interface shear provisions in the AASHTO BDS significantly underestimate the monolithic interface shear capacity of UHPC. The primary variable studied herein was the quantity of reinforcement crossing the shear interface. A proportional relationship was observed between the ultimate shear stress capacity and the passive clamping force provided by the interface reinforcement. However, the relationship was not as significant as that observed in a previous study. The experimental results show that interface reinforcement ratios below 1.0% are not effective in maintaining the UHPC's peak interface shear load-carrying capacity. UHPC has an inherently high interface shear capacity. As such, reinforcement ratios below 1.0% do contribute to higher interface shear capacities, but cannot maintain peak load after rupture of the interface; lower post-rupture loads can be sustained.

REFERENCES

1. AASHTO. (2017). *AASHTO LRFD Bridge Design Specifications.* Washington, D.C.
2. Crane, C. K. (2010). "Shear and Shear Friction of Ultra-High Performance Concrete Bridge Girders." Dissertation, Georgia Institute of Technology.
3. Kahn, L. F., and Mitchell, A. D. (2002). "Shear Friction Tests with High-Strength Concrete." *Structural Journal*, 99(1).