2019 International Accelerated Bridge Construction Conference, including Automation, Service Life and Ultra High-Performance Concrete

Collection of Conference Papers/ Extended Abstracts

FIU Engineering & Computing

ABC UTC
ACCELERATED BRIDGE CONSTRUCTION
UNIVERSITY TRANSPORTATION CENTER

WSDOT Ferry Terminal at Colman Dock Pedestrian Bridge Utilizing Innovative Materials for Accelerated Bridge Erection

Geoff Swett, PE, SE, WSDOT Bridge and Structures Office, 360-705-7157, SwettG@wsdot.wa.gov

EXTENDED ABSTRACT

The Washington State Department of Transportation's, Washington State Ferries Division, is upgrading the aging and seismically vulnerable Colman Dock Ferry Terminal in downtown Seattle. The terminal is the largest in Washington State and serves more than 9 million riders including more than 5.5 million foot passengers. Construction will be completed in stages and is scheduled to last until 2023 in order to preserve current levels of ferry service, while under construction. As part of the upgrade, a major portion of the pile supported trestle, the Terminal Building, the Passenger-only Ferry Facility, a passenger overhead loading to the ferries, and a vehicle transfer span will be replaced. Along with these upgrades a new pedestrian bridge 157'-4" long will be constructed between the new Terminal Building and the Passenger-only Ferry Facility. This pedestrian bridge will be the focus of this paper.

The project is WSDOT's first use of the GC/CM delivery method and the prime contractors are Hoffman Construction Co. and Pacific Pile and Marine. The design was completed using a combination of in-house and a team of consultant designers and architects.

Given the multiple construction stages for the project, it was desirable to construct and erect the pedestrian bridge in the shortest timeframe to minimize disturbance to ferry users and to reduce site construction. The pedestrian bridge consists of a steel pony truss constructed with HSS tubes and has a 12 foot wide walking surface. The bridge was originally planned to have a 5.5 inch cast-in-pace concrete deck. During the design phase it was decided to utilize an Implemented Advanced Technology comprising of Prefabricated Sandwich Plate System (SPS) bridge deck panels to form the new decking on the bridge. By utilizing the SPS panels for the bridge deck, a 60% reduction in deck weight was realized over an equivalent concrete deck.

The SPS panels consist of two thin outer steel plates that sandwich a polyurethane elastomer core. Steel edge plates are welded around the perimeter of the thin steel plates to create a sealed void between the outer two plates. The polyurethane elastomer is then pressure injected between the plates, which bond to the properly prepared plates forming a composite SPS panel. Bond between the plate and polyurethane is critical in the performance of the system and is verified during fabrication of the panels. The design requires a minimum bond strength of 1200 psi and testing for this project resulted in an average of 1700 psi being achieved. Depending on the span of the deck panels and design loads, the steel plates and thickness of the polyurethane core can vary. For this project the top and bottom plates were ¼ inch thick and the polyurethane core was 1 inch thick for a total section of 1.5 inches. The design of the panels includes a check on steel stresses, core stresses at the interface with the steel plates, and deflections. Deflections typically control and are limited to span length L/300. See Figure 1 for a typical section of the SPS deck panel.

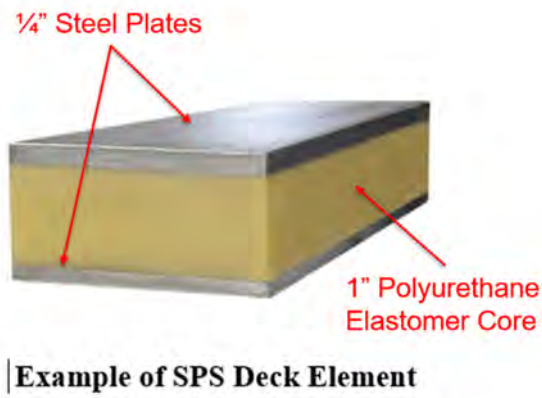

FIGURE 1 – Typical Section of SPS Deck Panel

The 157'-4" long bridge was fabricated in the shop as a single structure with no field splice connections required. Jesse Engineering, in Tacoma, WA, fabricated the structure. The SPS deck panels were fabricated on the East coast under the supervision of SPS Technologies and were shipped to Tacoma as completed units. After fabrication of the steel pony truss was completed, the SPS panels were bolted to the structure using countersunk high strength bolts at each truss floor beam. The floor beams consisted of an HSS member with a plate welded to the top providing a flange to facilitate bolting of the deck panels. A thin 1/4 inch wearing course consisting of methyl methacrylate and silica aggregate for surface roughness was applied to the top of the deck panels. See Figure 2 for a photo of the steel truss with the deck panels pre-erected onto the structure to verify fit, prior to removal for painting. The preassembled bridge was painted with WSDOT's 4-coat paint system, loaded onto a barge, and then floated to the construction site.

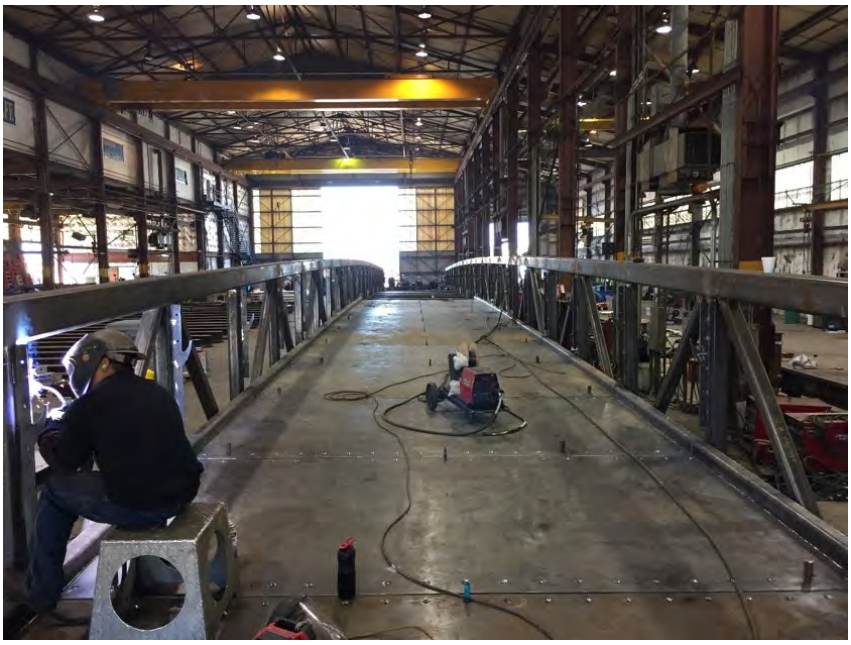

FIGURE 2 – Dry fitting SPS panels on bridge prior to painting operations.

Once arriving on site, the truss was erected using a derrick crane, the “Pacific Lifter”, and placed on previously constructed cast-in-place concrete piers with steel disc bearings. The total pick weight of the structure was 170 kips, down from 250 kips if erected with a concrete deck. The reduced pick weight allowed the Pacific Lifter to pick and erect the span at a significant radius, which couldn’t have been achieved at the higher 250 kip load. The erection and connection of the bridge to the bearings was completed in a few hours. See Figure 3 for a photo of the bridge erection. The bridge had immediate load carrying capacity as the SPS deck is an all steel construction with no site work required. Hand rail and expansion joints were installed at a later date but the structure was accessible and usable the same day. This lead to a simpler, safer and more predictable schedule for the contractor, thereby reducing construction schedule and cost. This bridge is being utilized during the staged construction as egress for passengers arriving at the terminal and provides access to the recently completed Passenger-only Ferry Facility owned and operated by King County. The pedestrian bridge utilizing SPS deck panels was fabricated and erected in Phase I of the multi-stage construction project, allowing the contractor to maintain schedule and move to the next phase of construction.

FIGURE 3 – Erection of steel pedestrian bridge with SPS panels.

DURABILITY OF GFRP BARS IN BRIDGES WITH 15 TO 20 YEARS OF SERVICE

Vanessa Benzecry, E.I., University of Miami, (786) 469-0327, v.benzecry@umiami.edu
Antonio Nanni, Ph.D., P.E., University of Miami, (305) 284-2404, nanni@miami.edu

ABSTRACT

Glass fiber reinforced polymer (GFRP) rebars have been implemented in concrete structures as a substitute for steel rebars due to their noncorrosive behavior. To validate their performance in concrete structures, a collaborative study between the University of Miami, Penn State University, Missouri University of Science and Technology and Owens Corning Composites investigated the durability of GFRP rebars extracted from eleven bridges with 15 to 20 years of service.

To investigate the durability of the GFRP rebars, 4 in.-diameter concrete cores were extracted from the bridges. A variety of tests were performed to evaluate the physical-chemical and mechanical conditions of the GFRP bars and their surrounding concrete. The results of DSC and fiber content were comparable to pristine values, while the results of the horizontal shear test were inconclusive. The results of SEM and EDS showed that bars from most bridges had no sign of physical or mechanical deterioration. Correspondingly, the results of a modified tensile test showed that bars in service for 17 years had a reduction in tensile strength of only 2.3%. This study provides positive indication on the long-term durability of GFRP bars as an internal reinforcement for concrete structures.

INTRODUCTION

Glass fiber reinforced polymer (GFRP) rebars have been implemented in concrete structures as a substitute for steel rebars due to their noncorrosive behavior. In order to validate their performance in concrete structures, it is important to understand their long-term durability. A collaborative study between the University of Miami (UM), Penn State University (PSU), Missouri University of Science and Technology (M S&T) and Owens Corning Composites (OC) investigated the durability of GFRP rebars in eleven bridges with 15 to 20 years of service. The bridges investigated are located in the United States and are exposed to wet and dry cycles, freeze-thaw cycles and deicing salts; therefore, making them more prone to degradation.

To investigate the durability of the GFRP rebars, 4 in. (10 cm)-diameter concrete cores were extracted from the bridges. A variety of tests were performed to evaluate the physical, mechanical and chemical properties of the GFRP bars and the condition of the surrounding concrete. Carbonation depth, chloride penetration and pH tests were performed on the concrete. The extracted bars were tested for horizontal shear strength and tensile strength. The cross section of GFRP specimens were analyzed for scanning electron microscopy (SEM) imaging and energy dispersive X-ray spectroscopy (EDS) to observe any changes in their microstructure and composition. GFRP samples were also tested for fiber content, water absorption, moisture content and T_g (differential scanning calorimetry (DSC)). The results of these tests were compared to data from pristine bars at the time of installation or to current standards when collected data was not available.

The objective of this study was to draw conclusions on the long-term durability of GFRP bars after at least 15 years in service. This paper presents how the study was conducted and its major findings. A report describing in details methodology and conclusions of the study is available at https://www.acifoundation.org/Portals/12/Files/PDFs/GFRP-Bars-Full-Report.pdf.

SELECTED BRIDGES

Eleven bridges in various locations across the U.S. were chosen for the investigation. Each of the bridges contains GFRP rebars in the deck or other location and has been in service for at least 15 years. These bridges are referred to as follows:

1. Gills Creek Bridge, Virginia (VA)
2. O'Fallon Park Bridge, Colorado (CO)
3. Salem Ave Bridge, Ohio (OH1)
4. Bettendorf Bridge, Iowa (IA)
5. Cuyahoga County Bridge, Ohio (OH2)
6. McKinleyville Bridge, West Virginia (WV)
7. Thayer Road Bridge, Indiana (IN)
8. Roger's Creek Bridge, Kentucky (KY)
9. Sierrita de la Cruz Creek Bridge, Texas (TX)
10. Walker Box Culvert Bridge, Missouri (MO1)
11. Southview Bridge, Missouri (MO2)

The location of the bridges is shown in Figure 1.

Figure 1. Location of investigated bridges

SAMPLE EXTRACTION

Concrete core samples of approximately 4 in. (10 cm) in diameter by 6 in. (15 cm) in length were extracted from the bridges. When possible, the targeted locations of extraction were areas with cracks and signs of environmental deterioration. Due to the inability to detect the GFRP bars, some concrete cores had GFRP samples shorter than 2 in. (5 cm) or no GFRP rebars at all. For this reason, to have a minimum of three samples per test, bars from the same bridge with the same nominal diameter were considered to be the same bar.

GFRP AND CONCRETE TESTS

To maximize the use of the small samples of GFRP bars for durability testing, an inventory for these samples was created. The capability of each laboratory was also evaluated to distribute the samples and tests along the collaborators. The capability of each laboratory is shown in Table 1 and the distribution of GFRP samples per test and laboratory is shown in Table 2.

The GFRP tests performed during this study were: fiber content, water absorption, differential scanning calorimetry (DSC), horizontal shear, scanning electron microscope (SEM), energy-dispersive X-ray spectroscopy (EDS), moisture content and modified tensile strength test. As long-term durability of GFRP rebars is related to the surrounding environment, tests to evaluate the condition of the concrete were also part of this study. The tests performed on concrete were: chloride penetration, carbonation depth and pH. The concrete tests allowed for observation of the concrete condition at the depth of the reinforcement, and, therefore, how such conditions may affect the durability of GFRP rebars.

Table 1. Collaborators' capabilities

GFRP Tests	University/Company			
	UM	MS&T	PSU	OC
Fiber Content	x	x	x	x
Glass Transition Temperate (DSC)		x	x	x
Scanning Electron Microscopy (SEM)	x	x		x
Energy-Dispersive X-ray Spectroscopy (EDS)	x	x		x
Interlaminar Shear	x	x		
Water Absorption	x	x	x	
Direct Tension	x			

Table 2. Distribution of bridge samples

Bridge	Fiber Content	Moisture Absorption	DSC	SEM/EDS	Horizontal Shear	Tension
IA	UM	UM	S&T	UM	UM	
OH2	S&T, PSU, OC	PSU	S&T, PSU, OC	OC	S&T	
VA	UM, OC	UM	S&T, OC	OC		
CO	UM, PSU	PSU	PSU	UM	UM	
OH1	UM	UM	S&T	UM	UM	
WV	OC, PSU	PSU	PSU	OC	UM	
IN	UM, OC, PSU	PSU	PSU	OC	UM	
KY	S&T, OC		S&T	OC		
TX	UM		UM	UM	UM	UM
MO1	UM		UM	UM	UM	
MO2	UM		UM	UM	UM	

GFRP TEST RESULTS

The bars were cleaned of any adhered concrete and were cut with a water-cooled diamond saw to the size needed for each test. The bars were pre-conditioned for 48 hours inside the oven at a temperature of 104°F (40°C) before tests were performed, in order to ensure the same conditions between different laboratories.

Tests were performed in accordance with ASTM standards when possible. The results of the tests were compared to data collected at the time of bar installation or to current standards when data was not available.

A summary of each test performed and its results is presented below.

Fiber Content

Two methods of fiber content were used in this study: burn-off technique in accordance with ASTM D2584 (1) and an acid wash technique. The acid wash technique used the procedure outlined on ASTM D2584 (1) and followed an acid wash to remove any fillers. This technique was performed at Owens Corning and allows for a more accurate measurement of the fiber content.

Fiber content was performed at every laboratory and GFRP bars from all eleven bridges were tested. Except for Roger's Creek Bridge, all bars presented an average fiber percentage by volume higher than 70%, which is the minimum required by ASTM D7957 (2) for quality control and certification of GFRP rebars**.** The results of the fiber content are shown in Table 3.

Table 3. Fiber content results

Bridge	No. of Samples	Average Fiber Content (%)	Standard Deviation (%)
Gills Creek	6	72.1	1.78
O'Fallon Park	6	72.9	1.75
Salem Ave.	3	72.5	0.06
Bettendorf	3	73.3	1.29
Cuyahoga County	15	76.4	2.47
McKinleyville	3	76.1	3.35
Thayer Road	3	76.5	1.79
Roger's Creek	5	67.7	1.08
Sierrita de la Cruz Creek	9	76.4	N/A
Walker Box Culvert	4	82.8	N/A
Southview	4	73.4	N/A

Water Absorption

Water absorption was performed in accordance with ASTM D570 (3) at UM and PSU. The bars were cut into samples of approximately 0.5 in. to 1 in. in length and immersed in distilled water at 122°F (50°C). The samples tested were from the following bridges: Gills Creek, O'Fallon Park, Salem Ave., Bettendorf Bridge, Cuyahoga, McKinleyville and Roger's Creek.

The ASTM D7957 (2) stablishes a limit of 0.25% of water absorption at 24-hr. and 1% for long-term water absorption. The long-term immersion duration (i.e., time to saturation) varied among bar types and sizes, as the measurements had to continue until the increase in weight (shown by three consecutive measurements over a period of two weeks), be on average less than 1% of the total increase in weight.

Bars from the majority of the bridges tested presented less than 0.25% of absorption gain at 24-hr. while at the long-term immersion, some samples presented a weight increase of up to 2%. The results are shown in Table 4.

Table 4. Water absorption results

Bridge	Number of Samples	Average 24-hr Immersion (%) ≤ 0.25	Weight Change at Equilibrium (%)≤ 1.0	Length of Saturation (days)
Gills Creek	3	0.58	1.57	179
O'Fallon Park	3	0.01	0.33	133
Salem Ave.	5	0.10	0.30	85
Bettendorf	3	0.54	2.16	179
Cuyahoga	4	0.19	1.47	133
Roger's Creek	3	0.05	0.16	77

Note: Average 24-hr immersion should be less than 0.25% and weight change at equilibrium should be less than 1.0%

Horizontal Shear

Due to the length of the extracted GFRP coupons, bars from only eight bridges could be tested for horizontal shear. These bridges included: O'Fallon Park, Bettendorf, Salem Ave., Cuyahoga, McKinleyville, Thayer Road, Sierrita de la Cruz Creek and Southview. The bars were tested in accordance with ASTM D4475 (4) at UM and S&T. However, due to the coupons' length, modifications of the test set-up were implemented while testing bars from Bettendorf and Cuyahoga bridges. Therefore, these results could not be used for evaluation. The results of the horizontal shear test for Sierrita de la Cruz and Southview yielded a higher shear strength than that from pristine bars at the time of installation. The results of the other bridges were also in compliance with current standards. The average result for each bridge is shown in Table 5.

Table 5. Horizontal shear results

Bridge	Nominal Diameter	Number of Samples	Average Apparent Shear Strength, psi (MPa)
O'Fallon Park	#7	2	6115 (42)
Salem Ave.	#6	3	6459 (45)
Cuyahoga	#6	3	4316 (30)
McKinleyville	#3	3	5214 (36)
Thayer Road	#5	3	6809 (47)
Sierrita de la Cruz Creek	#5	5	6047 (42)
Southview Bridge	#6	3	6340 (44)

Differential Scanning Calorimetry (DSC)

Differential Scanning Calorimetry (DSC) measures the heat flow into small pieces of bar in a sealed aluminum pan, relative to an empty pan, during a constant rate of temperature change from one limit to another. The changes in heat flow are used to assign a glass transition temperature (T_g).

Bars from nine bridges were tested: Bettendorf, Cuyahoga, Gills Creek, O'Fallon Park, Salem Ave., Sierrita de la Cruz Creek, Walker Box and Southview. The test was performed in accordance with ASTM E1356-08 (5) and T_g was assigned by drawing three tangents to the total heat flow curve, finding the middle value of total heat flow between the two points where the tangents intersect, and identifying the temperature corresponding to the middle value of total heat flow. This value is known as the mid-point temperature, T_m in ASTM1356-08 (5). The results were compared to the limit stablished by ASTM D7957 (2) that specifies a T_g higher than 212ºF (100°C). Most bars tested yielded a T_g higher than 212ºF (100°C); however, bars from three bridges (i.e., Cuyahoga, Gills Creek and O'Fallon Park) yielded T_gs of 198 (92), 207 (97) and 176ºF (80°C), respectively. The results of each bridge is shown in Table 6.

Table 6. T_g results

Bridge	Average *Tg* (°C) ≥ 100	Average *Tg* (°F) ≥ 212
Bettendorf	109	228
Cuyahoga	92	198
Gills Creek	97	207
O'Fallon Park	80	176
Salem Ave.	108	226
Roger's Creek	100	212
Sierrita de la Cruz Creek	115	239
Walker Box	112	234
Southview	101	214

Note: Average T_g should be more than 212°F (100°C)

SEM/EDS

Bars were cut with a water-cooled diamond saw into small samples of approximately 0.25 in (0.635 cm) and then mechanically polished with sand papers and sputter coated with gold to prepare for SEM imaging and EDS analysis. GFRP bars from all eleven bridges were tested for SEM and EDS at UM, S&T and OC. The SEM images focused on fibers located near the edge of the bar, as these are more likely to be damaged by external conditions.

Evidence of GFRP rebar fibers being negatively affected by the concrete environment after 15 years in service is minimal and less than expected or predicted by accelerated test methods. Physical damage on fibers was observed on the outer edge of some bars, typically near a void in the resin matrix. At times, damage is likely due to the specimen preparation procedure (saw cutting and polishing). Overall, it was estimated that approximately 0.05 to 0.12% of the total number of fibers was damaged.

The result of EDS analysis shows Si and Al (from glass fibers) and C (from the matrix) as the predominant chemical elements. An example of SEM image and EDS are shown in Figures 2 and 3.

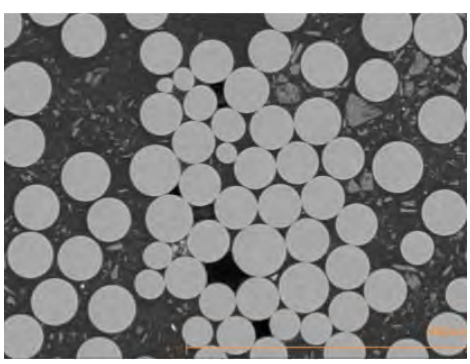

Figure 2. Cuyahoga Bridge. No visually affected fibers

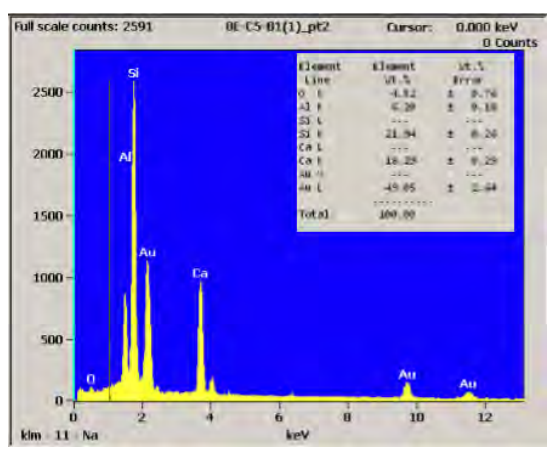

Figure 3. Bettendorf Bridge EDS

Modified Tensile Strength

Witness GFRP rebars were extracted from Sierrita de la Cruz Creek, thus allowing for a modified tensile strength test. The modified tensile strength test used extracted bars cut into coupons of approximately 0.4in x 10 in. x 0.1 in. (11 mm x 254 mm x 2.5 mm) (width x length x thickness) from the left, center and right of the bar circumference, as shown in Figure 4 and 5. These thin laminates were also obtained from new bars. And full-size new generation virgin bars were also tested in tension in accordance with ASTM 7205 (6).

The results from the new generation virgin full-size rebars were compared to data from tensile tests performed in 2000 on bars used in Sierrita de la Cruz Creek. Consequently, a correlation factor between the coupon ultimate tensile strength and the full-sized ultimate tensile strength was calculated and used to interpret results. It was found that the extracted GFRP bars had a reduction in strength of 2.1% over 17 years of service, as shown in Table 7.

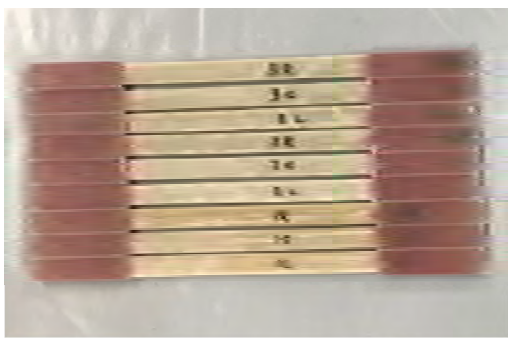

Figure 4. Extracted bars cut into laminates

Figure 5. Extracted bar from the left being tested in tension

Table 7. Modified tensile test results

Sample	Full size Strength, psi (MPa)	Coupon Strength, psi (MPa)	Change Between Coupon and Full-size %
Pristine	119,318 (823)	96,997 (669)	18.71
Extracted bars	113,840 (785)*	90,110 (621)	20.84
Difference due to degradation %			2.13

Note: * at the time of installation

CONCRETE TESTS

Chloride Penetration

The chloride penetration test consisted of applying a 0.1M silver nitrate solution to fresh broken concrete cores. Samples from all eleven bridges were tested for chloride penetration. The difference in the color of the concrete due to the silver nitrate was difficult to identify in some of the samples. For some bridges, no

chloride penetration was observed in the samples and in the worst case, about 2.5 in (6.35 cm) of chloride penetration was observed, a depth exceeding the location of the reinforcement.

Carbonation Depth

Carbonation depth was determined by using a phenolphthalein indicator solution sprayed over a freshly-cut concrete surface. The surface was monitored to observe any change in color. A surface turns pink when pH is above 9, and remains colorless when the pH is below 9. Concrete from eleven bridges were tested for carbonation depth. Most samples presented some carbonation near the surface, while others presented no carbonation. Sierrita de la Cruz Creek samples, however, presented significant depth of carbonation of about 1.5 in (3.8 cm).

pH

For the pH test two procedures were used: the procedure outlined by Grubb et al. (7) and a rainbow indicator from Germann Instruments, Inc. The procedure by Grubb and co-workers consisted of extracting 0.03 oz. (1 g) of concrete powder from each core and then placing it inside a mixing pan. Next, a 0.03 oz. (1 g) of distilled water was added and mixed with concrete powder. After that, the pH was determined using measuring strips. The pH of the samples varied between 9 and 13. The lowest average pH was 10 for both Roger's Creek and McKinleyville bridges, while the highest average pH was 12.2 for both Cuyahoga and Gills Creek bridges. The results of each bridge are shown in Table 8.

Table 8. Average pH

Bridge	Average pH	Bridge	Average pH
Bettendorf	12.1	Roger's Creek	10
Cuyahoga	12.2	Thayer Road	12
Gills Creek	12.2	Sierrita de la Cruz Creek	11.5
O'Fallon Park	12.1	Walker	11.5
Salem Ave	11.6	Southview	11.5
McKinleyville	10		

CONCLUSIONS

A variety of tests were performed to assess physical-chemical and mechanical conditions of GFRP bars and their surrounding concrete from eleven bridges with 15 to 20 years of service. The results allow the evaluation of the long-term durability of GFRP reinforced concrete structures.

The results of fiber content were in accordance with ASTM 7957 (2), as well as the results of T_g for most bridges. The results of moisture absorption and horizontal shear varied significantly among bridges and no specific conclusion could be drawn from these tests. The results of SEM and EDS showed minimal physical and chemical degradation. Furthermore, the results of modified tensile test for Sierrita de la Cruz Creek bridge also yield minimal reduction in tensile strength: 2.13% in 17 years of service.

The results of the concrete tests showed that most concrete samples had carbonation and chloride penetration near the surface and a few samples where chloride and carbonation reached the depth of the reinforcement. The pH of the concrete varied between 9 and 13, which is expected for the age of the samples.

Despite the challenge of working with a limited number of small samples, this study provides additional evidence to validate the long-term durability of GFRP rebars in concrete structures. The results of the tests were overall positive and indicated minimal degradation of GFRP after at least 15 years of service.

ACKNOWLEDGMENTS

This study was supported by the American Concrete Institute (ACI) Strategic Development Council (SDC). The full report is available at https://www.acifoundation.org/Portals/12/Files/PDFs/GFRP-Bars-Full-Report.pdf.

REFERENCES

(1) ASTM-D2584-18, 2018, "*Standard Test Method for Ignition Loss of Cured Reinforced Resins*, ASTM International, West Conshohocken, PA.

(2) ASTM D7957/D7957M-17, 2017, *Standard Specification for Solid Round Glass Fiber Reinforced Polymer Bars for Concrete Reinforcement*, ASTM International, West Conshohocken, PA.

(3) ASTM D570−98, 2018, *Standard Test Method for Water Absorption of Plastics* ASTM International, West Conshohocken, PA.

(4) ASTM D4475-02, 2016, *Apparent Horizontal Shear Strength of Pultruded Reinforced Plastic Rods by the Short-Beam Method*, ASTM International, West Conshohocken, PA.

(5) ASTM E1356-08, 2014, "*Standard Test Method for Assignment of the Glass Transition Temperatures by Differential Scanning Calorimetry*, ASTM International, West Conshohocken, PA.

(6) ASTM D7205/D7205M–06, 2011, *Standard Test Method for Tensile Properties of Fiber Reinforced Polymer Matrix Composite Bars*, ASTM International, West Conshohocken, PA.

(7) Grubb, J.; Limaye, H.; and Kakade, A.; 2007, "Testing pH of Concrete: Need for A Standard Procedure," *Concrete International*, Vo 29, No. 4, pp. 78-83.

REPLACEMENT OF THE MBTA FRANKLIN LINE OVER EAST STREET WESTWOOD, MA

Kristofer G. Kretsch. P.E., VHB, (617) 607-2763, kkretsch@vhb.com
Kaleigh Rowe Stutz, P.E., VHB (617) 607-2705, krowe@vhb.com

ABSTRACT

The Massachusetts Bay Transit Authority's (MBTA) East Street Bridge carries the MBTA Franklin Line over East Street in Westwood, Massachusetts. The existing bridge was not classified as structurally deficient, but had substandard vertical and horizontal clearance that resulted in many traffic accidents and vehicle collisions with the bridge structure. There were 81 accidents reported between 2009 and 2015 alone.

The Franklin Line is a critical part of the MBTA's rail network and is heavily used by both commuter and freight rail. Likewise, East Street is a heavily traveled roadway, and one of only 4 grade separated crossings within the Town of Westwood. It provides a direct connection between Westwood and Interstate Route 95. To minimize disruption to rail service and East Street traffic, accelerated bridge construction techniques were used to the maximum extent practicable.

INTRODUCTION

The MBTA's East Street Bridge is locally known in Westwood as the "can opener" bridge. It is renowned on YouTube for many accidents caused by the substandard clearances and roadway alignment. The existing bridge was not classified as structurally deficient, however substandard vertical and horizontal clearance and an awkward roadway approach resulted in many traffic accidents and vehicle collisions with the bridge structure rendering the bridge functionally obsolete. The primary goal of this project was to improve the horizontal and vertical clearance of the roadway below, and to improve the safety for both vehicles and pedestrians.

Photo #1: A fireman puts out the fire when an over height truck struck the East Street Bridge

Photo #2: Two cars collide under the East Street Bridge

This section of the Franklin Line corridor is double track and carries both MBTA Commuter Rail and CSX freight. The line is heavily used by both daily. East Street is a heavily traveled roadway, linking Westwood's Islington Village to I-95. For these reasons it was necessary to limit impacts to both vehicle and train traffic during construction.

The existing bridge at East Street was built in 1911 and provided only 10'-6" of vertical clearance over the roadway below. The abutments provided only 18'-5" of lane width plus a 2'-9" sidewalk below the bridge.

The approach roadways were forced to narrow at 'pinch points' on either side of the bridge to carry the lanes through. This narrowing caused a large portion of the vehicle accidents under the bridge.

EAST STREET
EXISTING CONDITION

PROJECT NEED

Town officials approached the MBTA and expressed concerns that the existing bridge was a safety hazard, citing numerous traffic accidents due to the narrowing of the road as motorists approach and travel under the bridge. The accidents captured by a 24-hour video camera monitoring system, implemented by the Town to document traffic incidents, typically occurred in two scenarios:

1. Vehicles traveling westbound, coming from I-95, strike the sidewalk curb below the Bridge, with their front passenger tire, and are directed across into the eastbound lane, resulting in a head-on collision with oncoming vehicles, or the abutment wall, when the eastbound lane does not contain a passing vehicle.
2. Vehicles exceeding the 10'-6" vertical clearance, strike the bridge and become trapped, often times scattering portions of the vehicle and its contents onto the roadway. In a few instances, vehicles striking the bridge have burst into flames.

These accidents have caused significant impacts to vehicular traffic, backing up vehicles onto I-95 North and South, and Route 1A. Commuter rail traffic has also been affected, with rail traffic being impacted along the Franklin Commuter Line, and ultimately the heavily traveled Northeast corridor from Boston's South Station to Providence Rhode Island.

CONCEPT DEVELOPMENT

This project posed many constraints during concept development to evaluate the plausible options for replacement of the bridge. First and foremost was the active railroad traffic that runs through this area. The volume of commuter rail traffic is high, especially during peak hours, and time schedules are inflexible. Additionally, freight traffic added several crossings throughout the day and night. East Street provides a critical link between the Town's Islington neighborhood, MBTA's Islington station, and Interstate 95. There were some initial concerns over potential impacts to roadway traffic, and the project team worked closely with Town officials to create a traffic management plan that suited all involved. Accordingly, every effort was made to minimize disruptions to East Street vehicular traffic during construction.

Another major constraint impacting superstructure options, was the necessity to increase the roadway clearance both vertically and horizontally below the bridge. A combination of raising the track profile and lowering the roadway profile was investigated to accommodate the changes and to achieve a balanced design. It was necessary to limit the track profile increase to avoid the need for added costly retaining walls along the right of way. Additionally, Islington Station is only 700 feet (+/-) north of the bridge and could not be changed or impacted as part of this project, so any changes to the track horizontally or vertically needed to tie into the start of the station. MBTA's Railroad Operations had concerns about any grade increase to the existing tracks, due to train slippage during the fall and winter months. There were also horizontal constraints within the railroad right-of-way to take into consideration, limiting the amount the tracks could move to accommodate new structures.

For the roadway profile adjustments, it was necessary to take account of the amount and location of existing utilities, both overhead and underground, which limited the available room to drop and widen the roadway.

The narrow opening between abutments required the roadway to be widened before the utilities could be relocated or lowered. It was also preferred that the lowered roadway not require a complete drainage re-design and replacement, and that it would tie into the existing nearby system without impacts beyond the project limits.

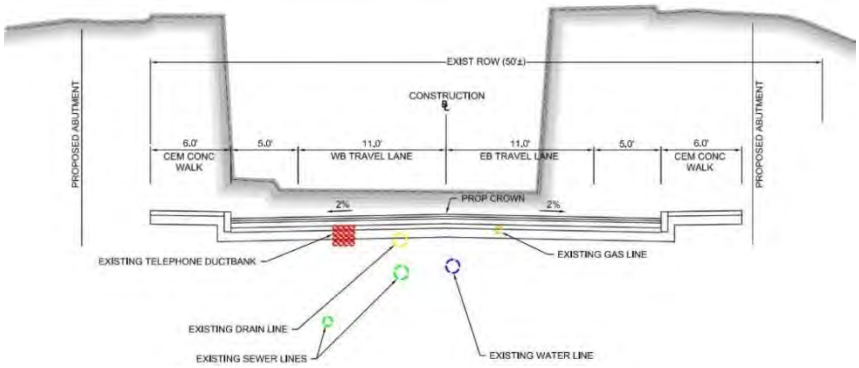

After evaluating several different options for proposed roadway and rail profiles, a compromise between the two was determined to be the best solution. It was decided to raise the rail profile approximately 21 inches and drop the roadway profile 16-18 inches under the bridge. This created a middle ground for the amount of track work and roadway/utility work required to complete the project.

Several different structure and construction alternatives were considered during the preliminary phase of this project. Both traditional and accelerated bridge construction techniques were evaluated. Due to the major constraints relative to the traveling public, particularly the necessity to minimize the roadway and track disruptions as much as possible, the accelerated construction concept was chosen for bridge type selection and design. This option was preferred as it required only night time and weekend shut downs. However, in order to accommodate the amount of track work required to raise the track profile during the allotted time frames, a non-traditional 'interim' profile concept was devised to limit the amount of track work required during the weekend bridge installations. In this interim concept, the approaches to the bridge were partially built up to final grade before transitioning back down to the existing grade at the bridge, creating a 'hump' on each approach. This interim profile significantly decreased the amount of track work required for the contractor on the busy bridge erection weekends.

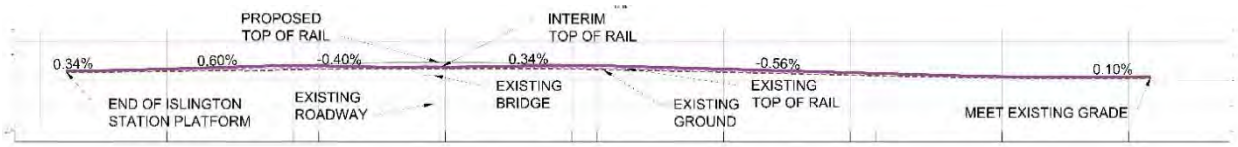

Once accelerated bridge construction was chosen, the types of feasible superstructures for such a project were limited. The structure type of through plate girders with a ballasted deck was ultimately chosen because it had the shallowest structure depth. A waiver to reduce the amount of ballast was also granted by the MBTA to go from the typically required 12 inches of ballast down to 8 inches. The design team further reduced the structure depth by creating the concept of two separate bridge structures, which not only facilitated the accelerated construction scheme, but also allowed for shallower girder sections due to not having a center girder supporting two tracks. With the two-structure concept came another consideration. The structure layout would require one track (Track 1) to shift approximately 3.5 feet to the west (away from track 2). In order to minimize that shift, it was required to take advantage of the minimum MBTA clearance envelope to lay out the girders. This triggered the need for emergency access walkways on both structures.

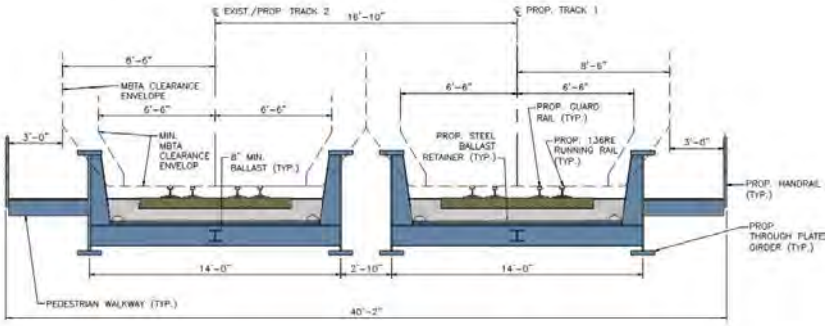

Like the superstructure selection, the substructure type selection was also narrowed down by the decision to use accelerated bridge construction. In order to install the new substructure with the least amount of

disruption to the active tracks, constructing deep foundations with precast abutment pieces was preferred to enable the construction sequence.

During the early phases of the project, there were a few concerns from the nearby residents on East Street related to the bridge replacement. Their apprehension was related to a potential increase in truck traffic and vehicle speed on the roadway once the clearance of the bridge was no longer a deterrent. Through several public meetings, the project team worked closely with the Town and residents to explain that the proposed bridge would allow those smaller 'box trucks', which were the main source of bridge impacts, to pass safely under the bridge. The increased clearance would still not allow larger trucks to pass through. There was also a truck restriction in place at another bridge along East Street that remains which will continue to limit their presence on the roadway. It was determined that the safety concerns for all users outweighed the perceived negative impacts.

ACCELERATED BRIDGE DESIGN

After the project reached the 30% design level, the MBTA was given the opportunity to bump the project construction start date up by a year. This required the MBTA and VHB to develop an accelerated design schedule by streamlining their typical process, forgoing the standard 60% design submittal, and providing an interim set of plans with 60% specifications while proceeding directly to the 90% plans, specifications and estimate. VHB and the MBTA committed to the updated timeline without sacrificing on the quality of the product.

In order to adhere to the project constraints, it was determined that the bridge construction would include Accelerated Bridge Construction techniques to the maximum extent feasible. The proposed design incorporated drilled shaft foundations with precast substructure elements. The best way to construct the new abutments was to place them behind the existing abutments, so the track could remain open while installing most of the proposed elements. The proposed drilled shafts were set far enough back to ensure they would not impact the existing abutments during installation. The location of the existing rails was also taken into consideration when laying out the shafts in order to allow for as much drilling during active rail times as possible. Soldier piles with cast-in-place concrete lagging walls completed the abutment and wing wall support, which were laid out to avoid the existing rails and abutments to the maximum amount that was practical. Concrete deadmen tied back the North (fixed) abutment to limit longitudinal force impacts on the drilled shafts and soldier pile and lagging walls. Using these walls, created the opportunity for the concrete facing to be cast after the existing abutments were demolished and the new bridges installed. This would allow for more space and greater flexibility for relocating the utilities and completing the remaining roadway work, while maintaining two lanes of traffic at all times.

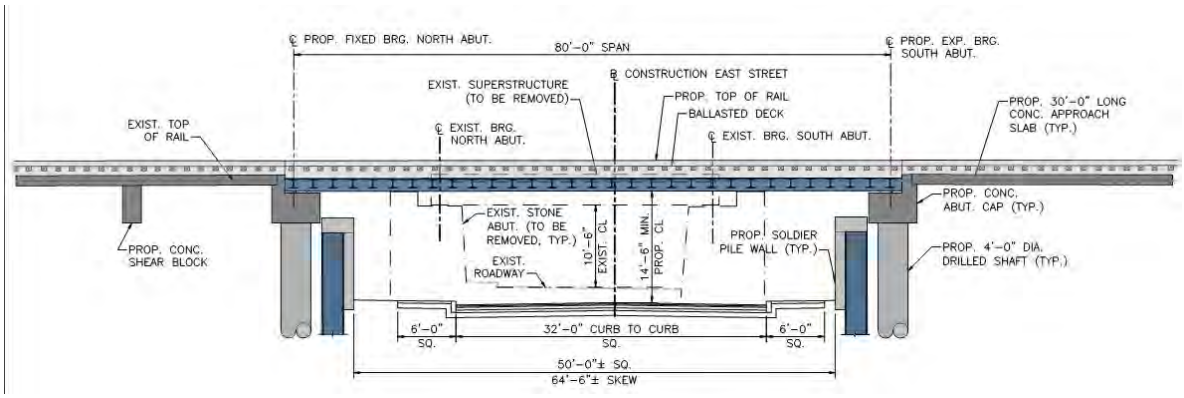

When it came time to develop the superstructure design, several factors went into the design decision. First and foremost was to minimize the structure depth in order to facilitate the improved clearances that were required. The proposed structure required a ballasted deck instead of the existing open timber deck. A ballasted deck would require a slightly deeper structure which limited the options. A steel through plate girder structure was selected to take advantage of the girder-floorbeam system. In order to maintain traffic on and under the bridges, the superstructure would be pre-assembled off site prior to installation. The constructability of installing a large two track structure was not ideal thus, the concept of two identical smaller structures was introduced which allowed half the bridge (one track) to be constructed during each weekend shutdown.

ACCELRATED BRIDGE CONSTRUCTION

To minimize disruption to rail service and East Street traffic, accelerated bridge construction techniques were used to erect precast abutments and to preassemble and erect the through plate girder superstructures. Barletta Heavy Division (BHD) of Canton, MA was the selected contractor through the bid process, and had extensive experience with several similar past ABC projects. Bridge replacement, including associated utility relocations and track realignment, were accomplished during a series of short-duration track and roadway closures, and weekend shutdowns. The project team worked closely with the Town and local police to give ample notice to residents and local emergency services ahead of roadway closures. The detour routes and closure times were coordinated between all parties in order to minimize the impact to the community as much as possible.

The drilled shafts and soldier piles were simultaneously installed during a series of single and double track weekend shutdowns, while East Street remained open. A number of the soldier piles were installed while both tracks were active due to their distance from the existing tracks, which allowed some of the work to be completed during the week. Four of the six shafts and the rest of the soldier piles were constructed and installed while at least one rail was active during single track weekends. The two center shafts were constructed during a single weekend with a full track closure. With timely scheduling of the drilled shaft installation, the project was able to take advantage of a closure required for the installation of Positive Train Control occurring at the same time. This reduced project costs relative to bussing weekend passengers.

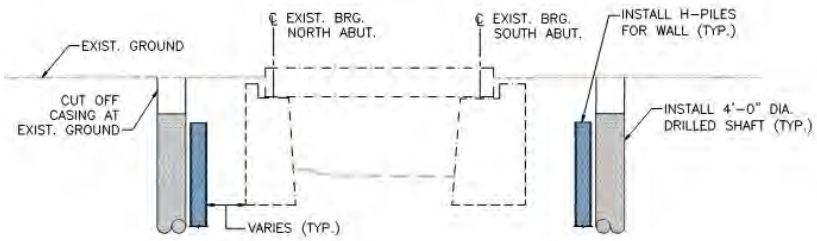

STAGE 1

Photo #3: Both tracks active

Photo #4: Single track shutdown

Photo #5: Both tracks shutdown

During the construction phase, several design changes were requested by the contractor in order to further streamline construction. The major change involved a change in construction staging in an effort further assure the construction would stay within the two full weekend shutdowns (both rail and roadway) allowed under the contract. Instead of installing one track at a time (both precast substructure and superstructure) in each of the two separate weekend shutdowns, the Contractor installed the entire precast substructure in one weekend shutdown and installed both superstructures in the second weekend shutdown. For this to work, the precast elements were buried in order to re-open the existing track between the precast install

and the superstructure install that took place several weekends later. To accommodate this change under the accelerated schedule, the MBTA, VHB and BHD had to expedite a Design Change Request (DCR) in short order to maintain the precast plant's schedule.

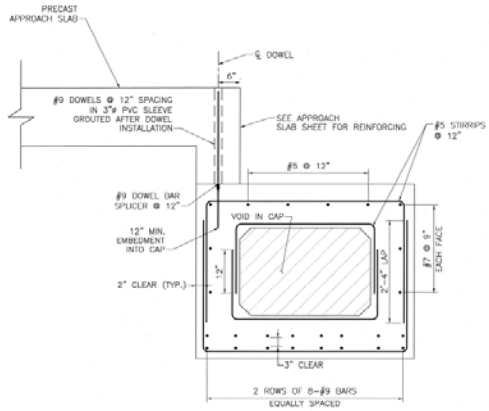

Proposed Precast Cap Design

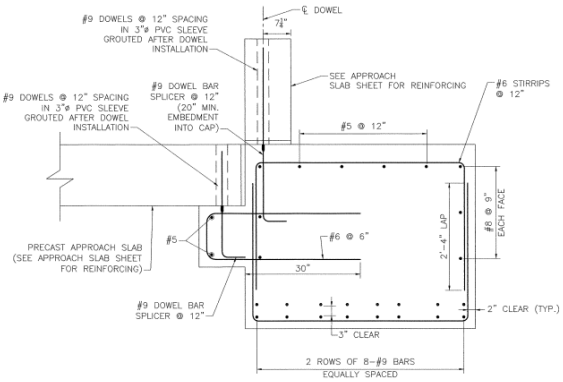

As-Built Precast Cap Design

The precast cap was re-designed to include a corbel to support the approach slab, allowing both the cap and approach slabs to be low enough below existing grade that the existing tracks could be re-installed and run over the buried pieces.

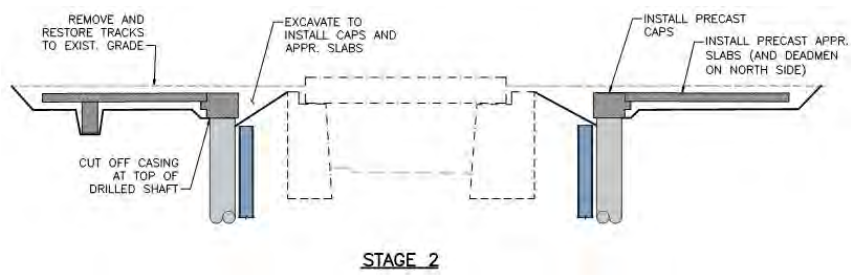

During the first full weekend shutdown of both the roadway and tracks, the contractor installed four precast caps, four precast approach slabs, and two precast deadmen. The existing bridge structure was not touched during this weekend. After the precast pieces were in place, flowable fill was pumped below to fill any voids and the pieces were buried. The existing tracks were then reinstalled and opened back up with plenty of time ahead of the first train early Monday morning.

Photo #6: Drone view of substructure installation

Photo #7: A precast cap is lifted into place on the drilled shaft foundation

The two superstructures were pre-assembled off site in a nearby MassDOT maintenance yard. The yard provided plenty of staging area for delivery and assembly of the various steel components. This also helped to minimize impacts to the roadway and rail traffic at the site, and to reduce the amount of work required

during the final weekend closure. The waterproofing and protective boards were installed while the bridges were in the yard, further decreasing the work required at the site.

Photo #8: A girder is lifted into place in the MassDOT yard off site

Photo #9: A floorbeam and deck plate section is lifted into place with the braced girder

The two separate smaller superstructures also allowed for more maneuverability and easier transporting of the structures to the bridge site. The contractor used self-propelled modular transporters (SPMT) to move the preassembled superstructures to the site for erection during the second full weekend track and roadway closure. The SPMT's drove each structure through the local neighborhood, down the street to the bridge site on the Friday before the weekend installation.

Photo #10: The project team 'walks' a bridge through the local neighborhood on SPMTs

Photo #11: The SPMTs maneuver around a tight corner on the way to the bridge site

Once both the tracks and roadway were closed, and prior to the bridge installation, the existing superstructure was cut into large chunks and removed to an offsite location to be fully dismantled. The existing substructure was then demolished down to a point where the superstructure could be installed, and the remaining precast backwall and wingwall pieces, as well as the bridge bearings, were installed.

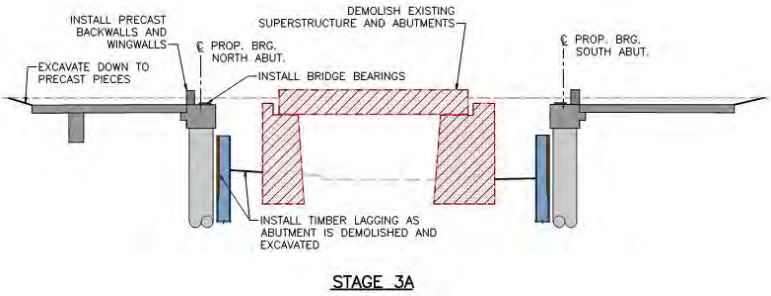

Photo #12: Existing abutment demolition

Photo #13: Precast backwall and bearing installation

Once the bearings were set, two 600 ton cranes were used for a heavy lift bridge installation for each superstructure. Because of due care taken during design and control measures taken during construction, the fabrication and assembly of the many pieces involved went together without any fit-up issues. The steel superstructures were placed within very tight tolerances on the precast backwalls. In addition to these construction activities, the track bed needed to be raised approximately 21" at the bridge, which included new subgrade, ballast and track.

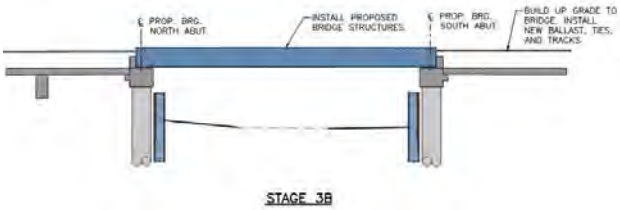

Photo #14: Bridge superstructure erection

Photo #15: Drone view of superstructure erection

Once the superstructures were set in place, the remaining track work over the bridge was completed as well as the rest of the existing substructure removal. The roadway was not lowered down to its final grade at that time, but was smoothed out so traffic could run over it in an interim condition. All weekend work was completed ahead of schedule to re-open the track and roadway early Monday morning.

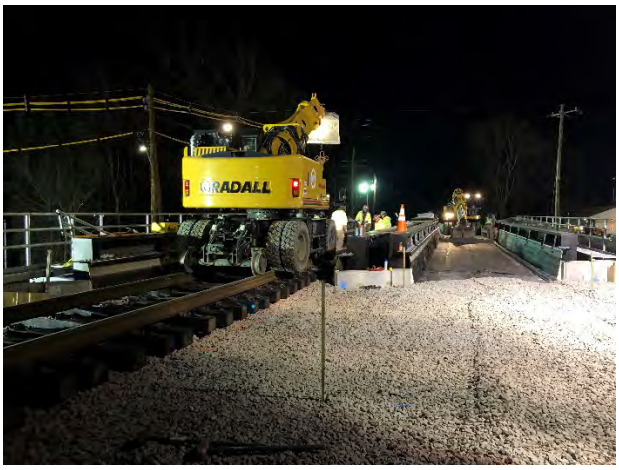

Photo #15: Final track work on bridge

Photo #16: Roadway open to morning traffic

Once the existing substructure and bridge were fully removed and replaced, almost double the staging space was available for the replacement of the utilities in the roadway and for lowering the roadway grade to its final profile. It also created the ability to use lane shifts in order to construct the CIP concrete facing on the soldier pile walls, to install the new sidewalks and pavement, and to facilitate the tie-ins to existing private properties, all while maintaining East Street traffic. The walls were able to remain in a temporary condition with the timber lagging, until the utility relocation and traffic patterns allowed for the permanent concrete facing to be cast. The final lowering and paving of the roadway were completed with single lane closures.

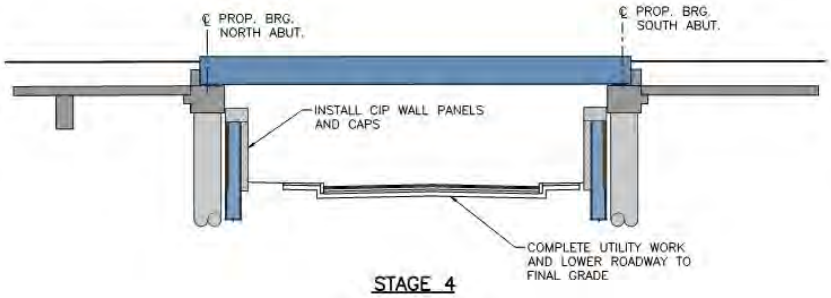

Photo #17: Final utility and roadway work around active traffic

Photo #18: Installation of C.I.P. concrete facing on the soldier pile and lagging walls

CONCLUSION:

The ‘can opener bridge’ presented an on-going danger to pedestrians, roadway and rail traffic. The need for un-interrupted commuter rail traffic required accelerated bridge construction techniques be used throughout the project. Work was concentrated during off peak and weekend time in order to facilitate the continued access for traffic below and on the bridge. The timing for construction funding required the design team to accelerate the design process without sacrificing on the quality of the project. With proper planning, extensive teamwork between the Owner, Designer, Contractor and Town, the result was a successful high profile bridge project completed on schedule and under budget.

PROJECT TEAM

MBTA – Owner

VHB – Lead Engineer and Designer

Nobis Engineering – Geotechnical

Green International Affiliates – Survey

Keville Enterprises – Project Controls, Estimating and Scheduling

Barletta Heavy Division – Contractor

AN ALTERNATIVE PRECAST PIER SYSTEM FOR ACCELERATED BRIDGE CONSTRUCTION (ABC) IN SEISMIC REGIONS

Mustafa Mashal, Ph.D., P.E., Idaho State University, (208)282-4587, mashmust@isu.edu
Leonard Ruminski, P.E., Idaho Transportation Department, (208)334-8529, leonard.ruminski@itd.idaho.gov
Arya Ebrahimpour, Ph.D., P.E., Idaho State University, (208)282-4695, ebraarya@isu.edu

ABSTRACT

A new type of connection for precast piers in seismic regions is presented. The connection utilizes structural steel pipes to emulate the conventional cast-in-place seismic performance. Two large-scale cantilever piers are tested under quasi-static cyclic loading. One pier incorporates cast-in-place construction and is intended as the benchmark specimen to compare results. The other pier is precast with a structural steel pipe in the plastic hinge zone. Results from testing showed adequate strength and ductility of the precast pier. It performed better compared to cast-in-place benchmark. The precast pier achieved larger values of strength and ductility. It also suffered less cracking and damage during lower drift ratios compared to cast-in-place benchmark.

INTRODUCTION

Accelerated Bridge Construction (ABC) is gaining popularity in many states, including Idaho. For concrete bridges, the use of precast components can accelerate construction, reduce traffic disruption, improve quality, increase durability, and enhance site safety with reduced environmental impacts. One of the main concerns in application of precast concrete in regions with moderate-to-high seismicity is to ensure adequate performance of the connection between precast members. The traditional cast-in-place seismic design philosophy relies on formation of plastic hinges during an earthquake. These hinges form in the substructure system (e.g. columns) and are detailed to provide a ductile response during the earthquake. From the precast perspective, several types of connections have been proposed to emulate the traditional cast-in-place seismic performance. These include grouted ducts connection, splice-sleeve connection, member socket connection, pocket connection, and others as previously studied by Marsh et al. (1) and Mashal and Palermo (2) (3). Some of these connections have been used in actual bridges located in seismic zones.

Each of the aforementioned connections has its pros and cons. For instance, grouted ducts connection has shown to provide adequate seismic performance, however it carries the risk of damage during transportation (e.g. protruding bars) and misalignment of the starter bars inside the ducts during assembly at the bridge site.

This research presents a new concept for a precast pier system in seismic zones. The concept uses embedded structural steel pipes in the potential plastic hinge zones. Compared to other precast connections such as grouted ducts, the proposed connection offers advantages such as: simple construction, greater installation tolerance, easier erection, the option for using a hollow cap beam to reduce weight of the precast element, use of non-proprietary materials, and improved serviceability (e.g. avoiding cracking to columns) during smaller earthquakes.

The proposed concept has been shown in Figure 1. The function of the pipe inside the precast column is to provide strength and ductility at the plastic hinge. The steel pipe provides shear and flexural resistance as well as confinement. It is similar to the concept for Concrete Filled Steel Tube (CFST); however in this instance the pipe is inside the precast column and does not run all height of it. The receiving pipe has a slightly larger diameter and is cast inside the footing and cap beam. There is an elastomeric pad at the column-to-footing and column-to-cap beam interface. This pad prevents crushing of concrete cover during

smaller earthquakes, which improves serviceability. As mentioned previously, the cap beam can be hollow or solid depending on the transportation constraints and weight limits.

The seismic design philosophy for the precast pier is that nonlinear deformation should be concentrated in the column pipe. In this instance, the cap beam, footings, and their components should remain elastic and are capacity protected elements.

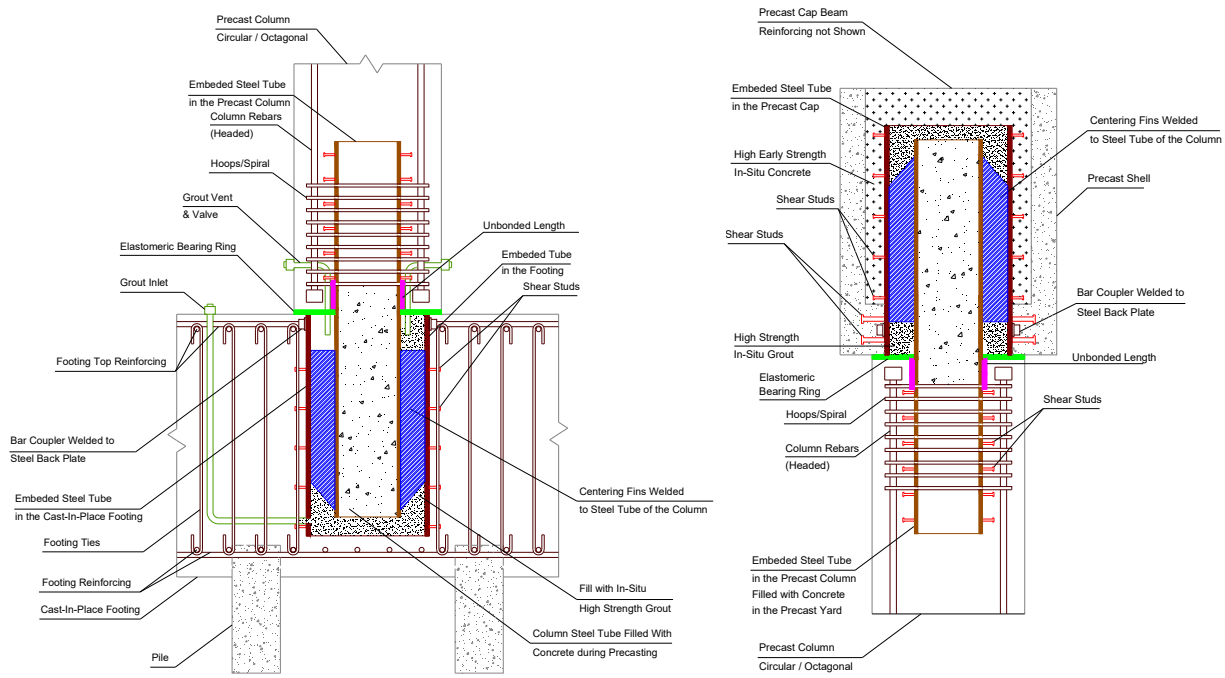

(a) Column-to-footing connection (b) Column-to-cap beam connection

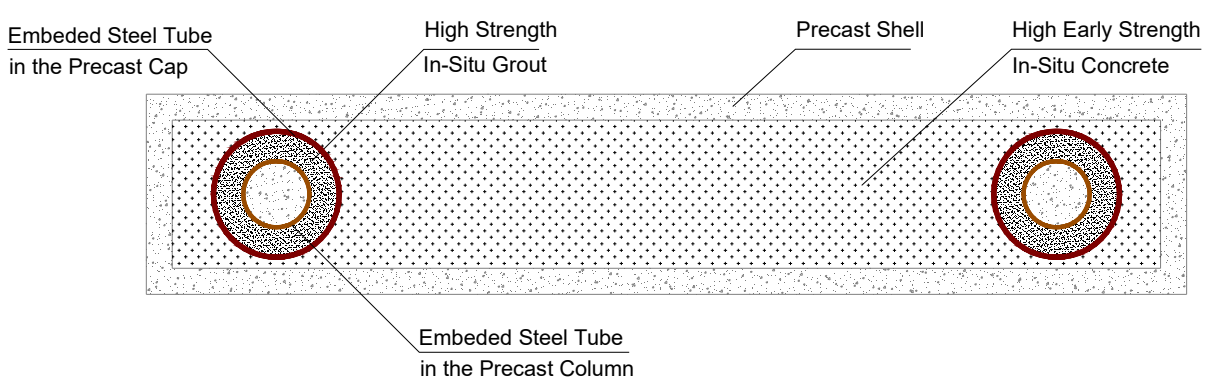

(c) Precast cap beam concept (hollow or solid)

Figure 1. Concept for a precast pier system in seismic regions.

Figure 2 presents the assembly process for the proposed precast pier system. In this instance, the precast elements are assembled first before grouting the connections. The gap between the receiving and column pipes is filled with non-shrink, high-strength grout. For the column-to-footing connection, this gap is filled by pumping grout through the grout ducts cast in the footing and the column during precasting (Figure 2b). For the column-to-cap beam, the gap is filled by pouring grout from the top, using gravity. Once the grout

achieves a good strength (e.g. 3,000 psi), the hollow cap beam is then filled with in-situ high-early strength concrete.

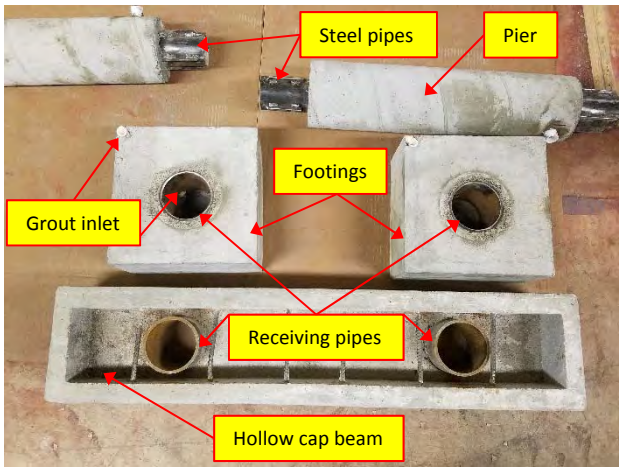

(a) Components of the precast bent

(b) Precast pier with steel pipes and welded fins

(c) Assembled precast pier

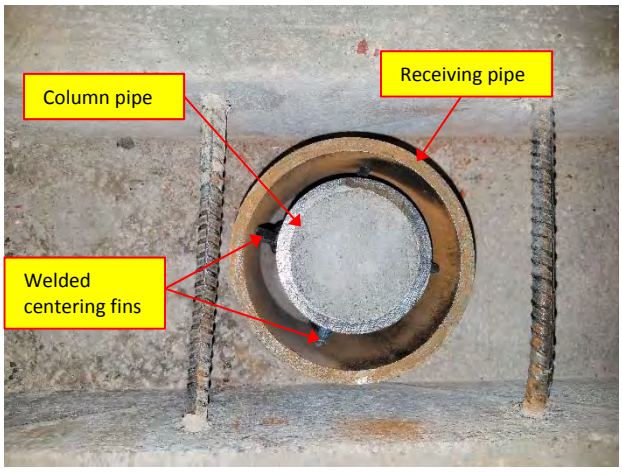

(d) Gap to be filled with high-strength grout

(e) Grout outlet in the column

(f) Grouted bent and concrete filled cap beam

Figure 2. Assembly sequence for the precast pier system.

EXPERIMENTAL PROGRAM

In the first phase, two large-scale cantilever specimens are tested under uni-directional quasi-static cyclic loading protocol as plotted in Figure 3. One specimen represents the conventional cast-in-place construction while the other is precast with pipe connection. The specimens represent 1/3rd scale piers in a typical highway bridge in Idaho. Both specimens were designed in accordance with AASHTO LRFD Bridge Design Specifications (4). Available literature from Wasserman and Walker (5) and Washington Department of Transportation Bridge Design Manual (6) are utilized to design the required embedment length of the column and receiving pipes to develop plastic capacity. The flexural capacity of the precast column with CFST at the interface is similar to that of the Cast-In-Place (CIP) with reinforcement bars. (Figure 4). Figures 5-6 present details of the cast-in-place and precast pier specimens, respectively. Testing arrangement is shown in Figure 7.

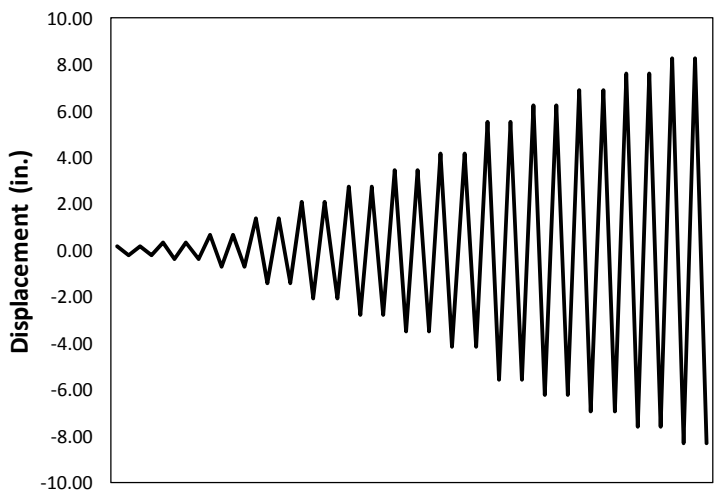

Figure 3. Quasi-static cyclic loading protocol.

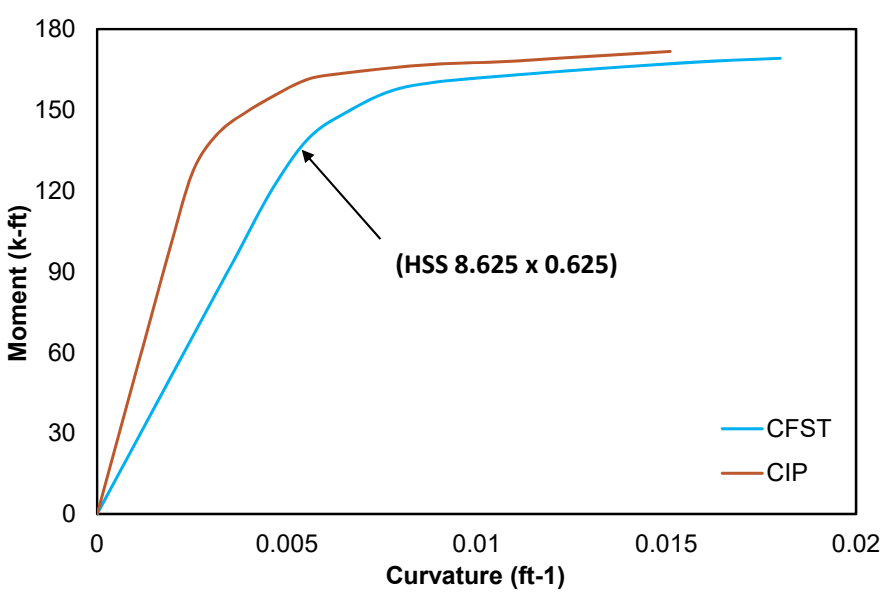

Figure 4. Theoretical moment-curvature plots for the specimens.

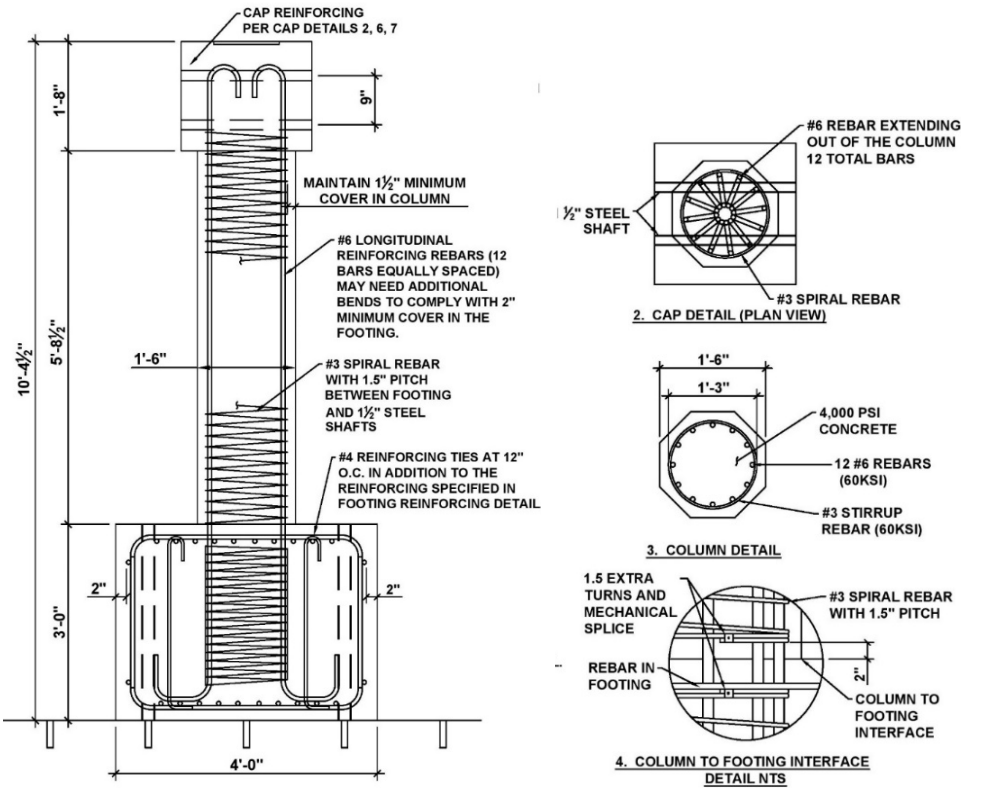

Figure 5. Cast-in-place specimen.

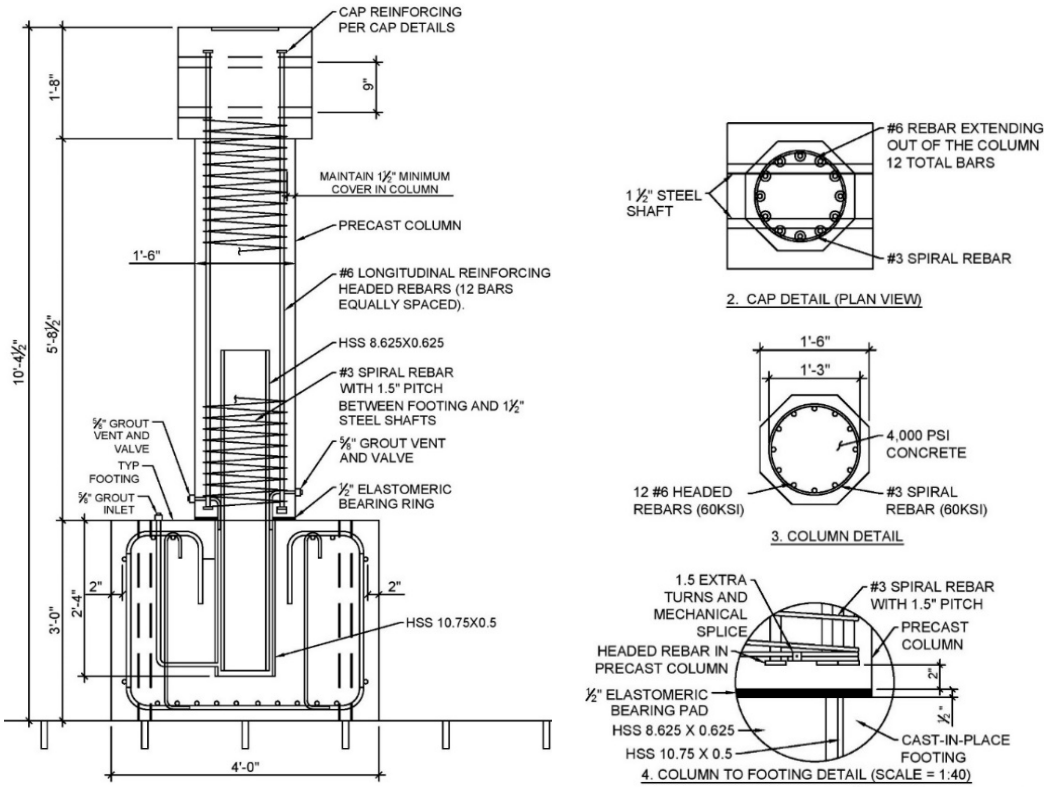

Figure 6. Precast specimen.

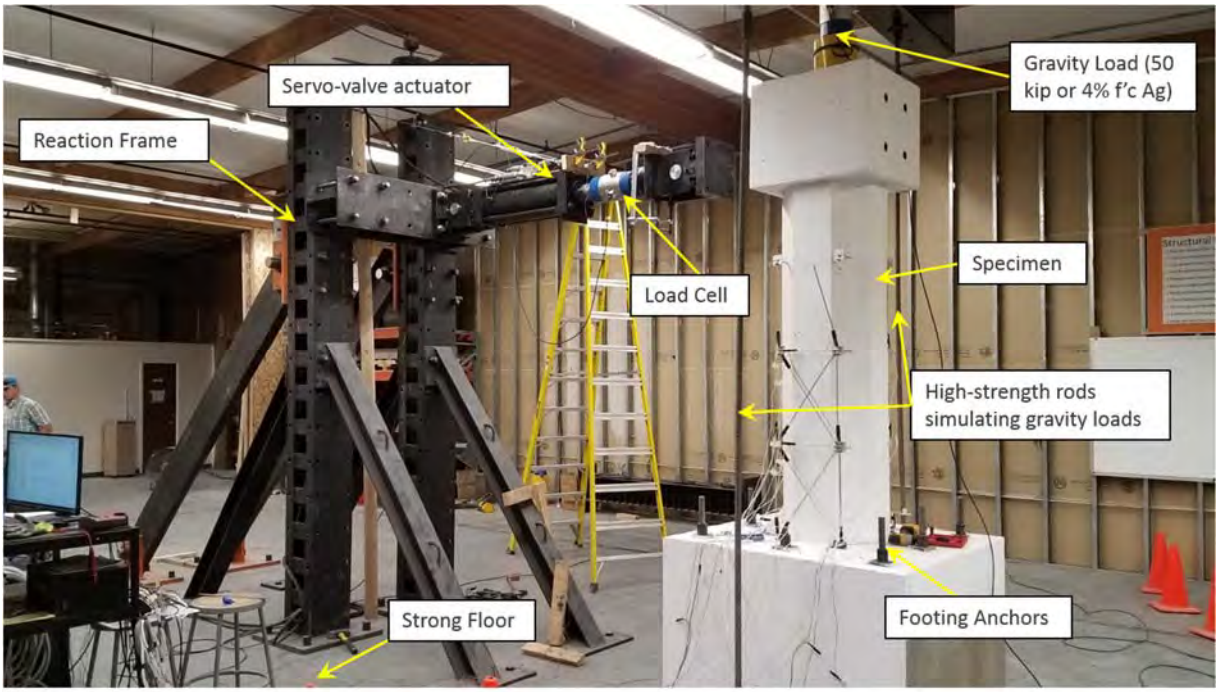

Figure 7. Testing arrangement.

RESULTS

Figure 8 presents the force-drift hysteresis for the cast-in-place specimen. The performance is very similar to what can be expected to cast-in-place construction (e.g. formation of plastic hinge). First rebar rupture occurred during the second cycle of the 8.5% drift ratio. Two other rebars ruptures can be seen during subsequent cycles. Figure 9 shows progression of damage in the plastic hinge region.

Figure 10 presents the force-drift hysteresis for the precast specimen. The performance is different than a traditional cast-in-place. The hysteresis is fatter and more ductile. Figure 11 shows progression of damage in the plastic hinge zone with increasing drift ratios. There is less cracking to the column during cycles of lower drift ratios compared to cast-in-place construction. With increasing drift ratio, extensive spalling of the unconfined cover concrete occurs in the plastic hinge region. The specimen starts degrading rapidly during the second cycle of 10.7% drift ratio. The failure mechanism is triggered by "elephant-leg" buckling of the steel pipe over the un-bonded region.

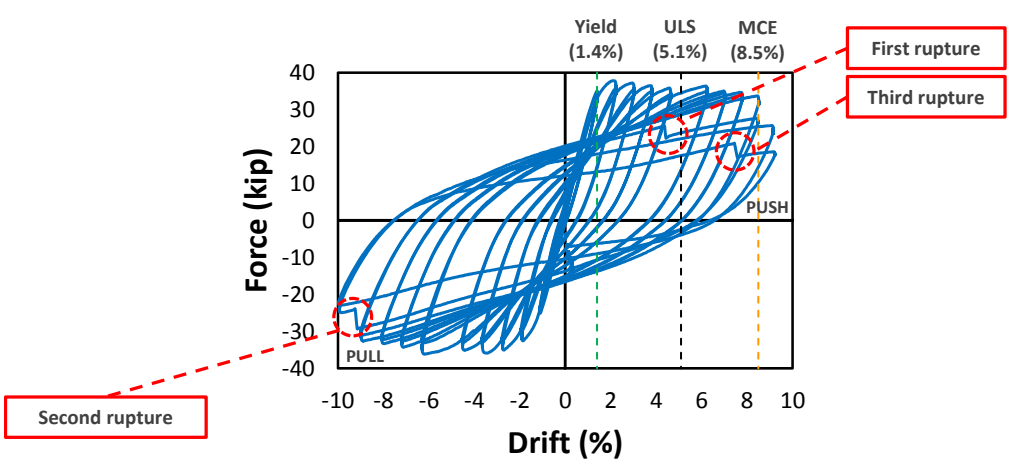

Figure 8. Force-drift hysteresis for the cast-in-place specimen (ULS = Ultimate Limit State; MCE = Maximum Considered Earthquake).

2.2% Drift Ratio 3.8% Drift Ratio 9% Drift Ratio

Figure 9. Damage progression in the cast-in-place specimen.

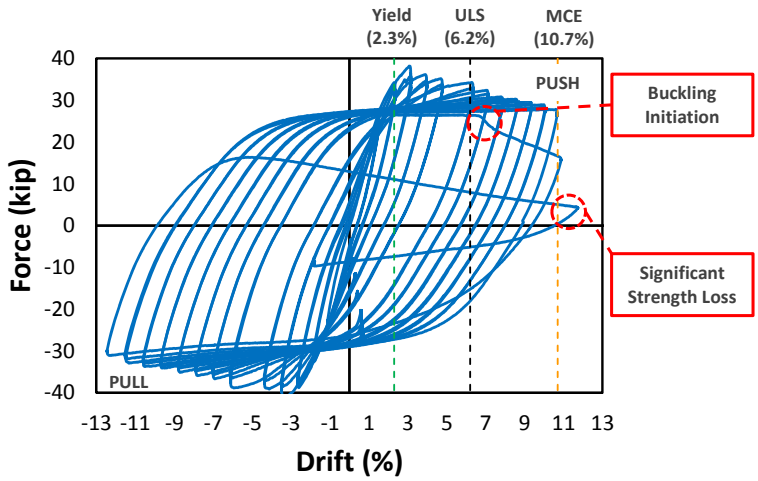

Figure 10. Force-drift hysteresis for the precast specimen (ULS = Ultimate Limit State; MCE = Maximum Considered Earthquake).

2.35% Drift Ratio 3.97% Drift Ratio 8.8% Drift Ratio

Figure 11. Damage progression in the precast specimen.

CONCLUSIONS

A precast pier system for seismic regions is proposed. The concept offers advantages such as: ample construction tolerance, easy erection, hollow cap beam to reduce weight, non-proprietary materials, use of ABC methods, and flexibility to accommodate smaller earthquakes without cracking to the piers. Two large-scale cantilever piers are constructed for uni-directional quasi-static cyclic loading. Experimental results show better performance of the precast pier compared to the cast-in-place construction. The project is on-going at Idaho State University. In the second phase of the research, two bents (one cast-in-place and one precast) will be tested under quasi-static cyclic loading protocol. The project also includes developing Finite Element (FE) modeling for the specimens. Based on the outcomes of the research, the Idaho Transportation Department (ITD) may use the proposed concept in this paper in a real-life project in southeast Idaho which is located in a seismic region.

ACKNOWLEDGEMENT

The authors are thankful to the Idaho Transportation Department (ITD) for supporting this research and providing feedback. The contents of this article, funded by the ITD and the Federal Highway Administration, reflect the views of the authors, who are responsible for the facts and accuracy of the data presented herein. The contents do not necessarily reflect the official views or policies of the Idaho Transportation Department or the Federal Highway Administration. This article does not constitute a standard, specification, or regulation.

REFERENCES

1. Marsh, M. L., Stanton, J. F., Wernli, M., Eberhard, M. O., Garrett, B. E., and Weinert, M. D. (2011). Application of Accelerated Bridge Construction Connections in Moderate-to-High Seismic Regions. The National Academies Press, Washington, DC.
2. Mashal, M., White, S., and Palermo, A. (2016). “Quasi-Static Cyclic Testing of Emulative Cast-In-Place Connections for Accelerated Bridge Construction in Seismic Regions.” Bulletin of the New Zealand Society for Earthquake Engineering, 49(3).
3. Mashal M., and P. A. (2019). “Emulative Seismic Resistant Technology for Accelerated Bridge Construction.” Soils Dynamics and Earthquake Engineering, (Special Issue on Earthquake Resilient Buildings).
4. AASHTO (2017). AASHTO LRFD Bridge Design Specifications. Washington, D.C., United States.
5. Wasserman, E. P., and Walker, J. H. (1996). “Integral Abutments for continuous steel bridges.”
6. Washington DOT. (2018). Bridge Design Manual (LRFD). Olympia, United States.

ACCELERATED BRIDGE CONSTRUCTION AND CMGC DELIVERY FOR THE SAN DIEGO GENESEE VIADUCT

POOYA HADDADI, P.E., S.E., WSP USA, (714)564-2707, pooya.haddadi@wsp.com

BITA SHAHLA, P.E., WSP USA, (714)564-2724, bita.shahla@wsp.com

KEYWORDS: ABC, PBES, CMGC, Viaduct, Precast Concrete, Spliced Girders

The Mid-Coast Corridor Transit Project (MCCTP) is the largest transit infrastructure project currently under construction in San Diego, California in the southwest corner of the continental United States. The project will provide an 11-mile light rail transit (LRT) link between downtown San Diego and the University Towne Center (UTC) business and education center, including the University of California San Diego (UCSD) campus.

The $2.2B project includes 4 miles of aerial structures, 12 bridge structures, 9 station facilities and 5 miles of retaining walls. It is being delivered in a partially shared corridor by a single contractor, encompassing two other major projects to double-track freight and passenger rail in the region. The corridor includes complex river crossings, seismic fault crossings, and viaducts over highway and local streets.

This project is being delivered through Construction Manager General Contractor (CMGC) approach using ABC method, an innovative contracting method approved by the Federal Highway Administration (FHWA). This method allows the engineering team and potential contractor (CMGC team) to work in partnership during the preliminary engineering and design phase. The CMGC team was involved during the design phase to provide input on constructability, cost, schedule and work planning and to develop a guaranteed maximum price (GMP), that was accepted to progress into the construction phase.

One of three major viaducts within the MCCTP is the 1.1 mile Genesee Viaduct. The viaduct runs in the median of Genesee Avenue, a six-lane arterial road with dense concentrations of residential, business and institutional land use and critical for accessing UCSD. Maintaining local traffic and minimizing impacts to the surrounding community were critical for this viaduct, and the primary driver of structure type and construction methods. For this reason, the Prefabricated Bridge Elements and Systems (PBES) of ABC technologies were used to reduce the overall onsite construction time for the viaduct.

The Genesee Viaduct will be the first curved spliced precast U girder bridge in California supporting LRT. It consists of 35 spans and carries two tracks of light rail vehicles. It provides support for two elevated side platform stations.

DESIGN GUIDELINES

The viaduct is designed in accordance with the American Association of State Highway and Transportation Officials' (AASHTO) Load and Resistance Factor Design (LRFD) Bridge Design Specifications with amendments by California Department of Transportation (Caltrans) as well as the project specific design criteria.

ALIGNMENT AND PROFILE

The viaduct begins on a 1,250-foot radius curve, continues into a 990-foot radius curve, followed by tangents and spirals until reaching the first aerial station on a tangent. The vertical profile was selected to provide adequate permanent and temporary vertical clearances over Genesee Avenue and the local crossing streets. A temporary vertical clearance of 15'-0" to Genesee Avenue is considered during construction, which is 1 foot less than the final clearance condition.

FRAME TYPES

The viaduct is divided into 12 frames separated by expansion joints and in-span hinges. The span lengths vary from 108 feet to 225 feet. The precast girder layout was designed to limit girder lengths and the hauling weight of each unit below 100 tons. This was to reduce hauling cost and prevent the need for self-propelled modular transporters (SPMTs) for transportation between fabrication yard and construction site. Spans were therefore each divided in two to four units of precast girders. The viaduct is made up of three frame types with varied construction methods, girder assembly, and splicing operation.

Type 1: Precast Girder Frames

There are nine precast girder frames in the viaduct, consisting of precast u-girders spliced by one-stage or two-stage prestressing (PS). For the five frames with traffic underneath, the first stage of prestressing is performed in two steps. Step 1 involves splicing girders for spans over the intersections in a staging area near the site. After this splice operation is complete, the entire spliced segment is lifted and placed on temporary shoring towers. In step 2, a second prestressing tendon is used to splice the remaining girders that are not crossing any traffic while supported on shoring towers. Once all girders are spliced within each segment, a second stage of prestressing is performed to connect all spliced segments in the frame together and form continuity between expansion joints. The remaining four frames, not crossing traffic, are spliced and prestressed in one stage. The cross section of these precast girder frames consists of two PCI 96 in deep U-girders (Figure 1).

Type 2: Precast-CIP Hybrid Frame

The longest span in the viaduct is 225 feet crossing over La Jolla Village Drive. Due to weight limits for precast girders, this span was too long to be spliced entirely at a staging area and lifted on temporary shoring towers in one piece. Instead, the team proposed a hybrid precast / cast-in-place superstructure to reduce the spliced length over the intersection and accelerate the construction and reduce traffic impacts. Short CIP cantilevered spans were built on both sides of the intersection integral with the columns in a shape of a hammer head outside of required traffic opening at the intersection. The superstructure depth varies from 8'-10 ½" at precast girder splice point to 11'-0" at the face of column (Figure 2).

Type 3: CIP Station Frames

The viaduct serves two aerial side-platform stations, each within a single structural frame. The side platforms are supported by a series of evenly spaced transverse beams connected to superstructure girders. Due to complexity of aerial station construction and presence of multiple transverse beams that require integral connections to superstructure, it was decided to use a cast-in-place box girder construction for the entirety of frames carrying aerial stations. The typical section consists of CIP box girder as the primary system and attached to it are station side platforms and transverse beam supports (Figure 3).

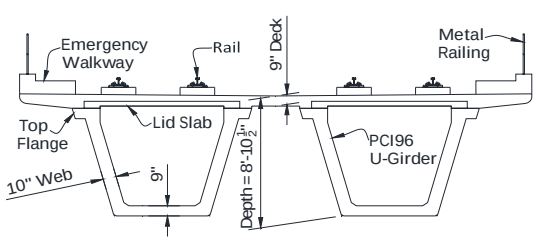

Figure 1*: PC* Girder Frame Cross Section

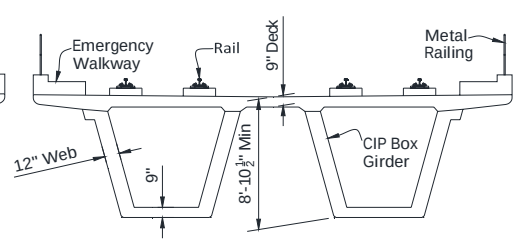

Figure 2: Cast-in-Place Section at Hybrid Frame

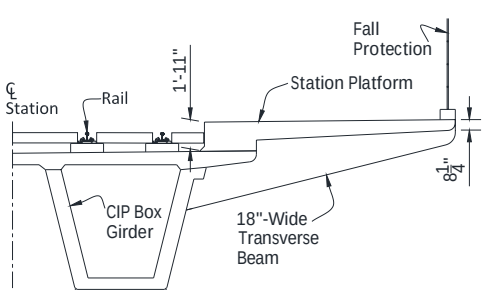

Figure 3: Station Typical Section (Half-Section)

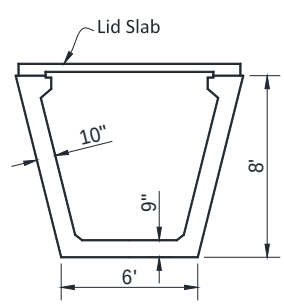

Figure 4: Precast Cross Section

SUBSTRUCTURE

The viaduct substructure consists of single columns supported on single cast-in-drilled-hole (CIDH) piles. Column to superstructure connections at precast girder frames are either expansion joints or pins. At the hybrid frame and the CIP station frames, columns are integrally connected to the superstructure to reduce negative moment demands near the bent and to better control seismic displacements of columns. Columns are circular with diameters of 7 feet, 8 feet or 9 feet. The viaduct includes one straddle-bent that is post-tensioned transversely and is supported on two columns fixed to the cap. Columns utilize either one-way or two-way flares to meet different aesthetic requirements. In California, two pile types are considered for seismic design. For Type 1 piles, the same rebar cage is continued from the column into the pile foundation typically forcing the seismic plastic hinge to form below the ground. Type 2 piles are oversized in the ground and ensure the plastic hinge forms above ground. A combination of Type 1 and 2 shafts were used throughout the viaduct to balance the stiffness between adjacent bents and to better control the dynamic behavior of frames under seismic loading.

INNOVATIVE ABC STRATEGIES

Spans Over Intersections

Full closure of the intersections was only allowed during night time and could only happen at one intersection at the time. Six locations were identified where precast girder spans were crossing over live traffic where this criterion applied. In these locations, the design team developed an innovative approach to splice the precast girders at a staging area near the site, then transport the spliced segment to the site at night for erection. The spliced segment was erected and placed on shoring towers during a one-night closure of intersection. The length of the spliced segments varied from 140 feet to 180 feet.

Use of PBES to Reduce Cost & Schedule

(1) The precast U-girder was selected for the viaduct to reduce construction duration, minimize falsework construction and alleviate traffic impact. Precast construction allowed for a simplified shoring tower system to be used as opposed to extensive falsework structure typically used in cast-in-place concrete construction. Construction schedule was also reduced by allowing fabrication of precast girders in a remote site while substructure work and other construction activities continued simultaneously at the main site.

(2) The same precast girder type and constant girder depth were selected for all precast spans. This was done to maximize repetition in girder fabrication and to reduce the cost and fabrication time associated with use of multiple girder types and precast forms. The 8-foot deep precast U section provided an efficient girder type for satisfying the depth to span ratio for various span configurations in the viaduct.

(3) A fixed plan radius was selected for all the curved precast girders in the viaduct. With this option, the fabricator could use a single form with a constant radius for all the curved girders.

(4) The lid slabs were being casted in precast yard as a second pour after casting the precast girders. By advancing construction activities related to lid slab, the contractor could accelerate the schedule for casting CIP deck, CIP end diaphragms and performing the continuity prestressing operation.

(5) The top flanges of precast girders were turned inward (Figure 4) to match the cross section of standard California bath tub girders. Web thickness and bottom flange thickness remained the same as the original design. This was done to allow the fabricator to use the available local forms in California reducing cost and eliminating the need to buy expensive forms.

CONCLUSION

For this viaduct, innovative design and construction methods were incorporated by the design and the CMGC team that benefited the project in many ways resulted in reduced traffic, construction cost and environmental impacts**.** Number of ABC strategies were employed to accelerate the construction, optimize construction schedule, improve design quality, and improve work-zone safety.

ABC Design of UHPC Decked I-Beam Vehicular Bridge in Ontario, Canada

Maher K. Tadros, Ph.D., P.E., eConstruct.USA LLC, (402) 884-9998, maher.tadros@econstruct.us
Adam Sevenker, M.S., P.E., eConstruct.USA LLC, (402) 884-9998, asevenker@econstruct.us
Don Gardonio, President of FACCA Inc., (519) 975-0377, don@facca.com
Philip Loh, M.Eng., P.Eng., Dura Concrete Canada Inc., (519) 975-0377, philip@facca.com

ABSTRACT

The structural engineering firm, eConstruct (Omaha, Nebraska, United States), has designed an Ultra-High Performance Concrete (UHPC) decked I-beam to be installed at a new privately-owned vehicular bridge in Shanty Bay, Ontario, Canada for demonstration and evaluation. Through a technology transfer joint venture agreement between FACCA Incorporated (Ruscom, Ontario, Canada) and Dura Technology (Ipoh, Malaysia), the Dura UHPC is batched using local North American raw materials. This paper will focus on development of structural design criteria of the UHPC decked I-beam, with emphasis of Accelerated Bridge Construction (ABC) in the implementation of this Design-Build project. The paper will also list items needing further investigation.

One of the biggest challenges faced thus far has been the creation of formwork that will allow for the top flange waffle deck to be cast simultaneously with the rest of the beam without creation of any cold joints. This paper will describe the prototype pieces and small specimens which are currently being cast for element testing. In line with the ABC objective, details have been developed to implement a precast semi-integral abutment design with the decked I-beam in staged casting, as well as precast UHPC piles, retaining walls and approach slabs. Construction of the bridge is planned to be completed by the time of this conference. The conference presentation will therefore be expected to show photos of production, handling and erection of the various precast bridge components.

INTRODUCTION

This paper will focus on the design and implementation of the first UHPC vehicular bridge in Canada, with discussion on the Acceleration Bridge Construction (ABC) design aspects. This is a collaborative effort between the Ontario Design-Build Contractor, FACCA, Inc., and the engineering designer eConstruct USA, LLC led by Dr. Tadros, who is also the original developer of the popular NU I-Girder. The goal was to help convert the NU I-Girder to a product which fully incorporates UHPC. FACCA also engaged Dr. Jackie Voo, of the Malaysian company DURA, to give advice about implementing the technology he has successfully used in Malaysia. Thus, a strong team was formed including the original developer of the NU I-Girder, the most successful implementer of UHPC, and a versatile contractor who has been successful in precasting concrete bridge products and building bridges with them.

The proposed UHPC DIB vehicular bridge is a replacement for a deteriorating private timber structure in Shanty, Ontario with a posted load rating of 500 kN. The owner of the bridge has requested the new structure to be designed for the CL-625-ONT truck loading (625 kN total axle load) according to the Canadian Highway Bridge Design Code (CHBDC) (1). The new bridge will be a 15-m single span structure which eliminates the pier in the creek as in the existing bridge. Figure 1 shows the elevation of the proposed bridge and outline of the existing structure.

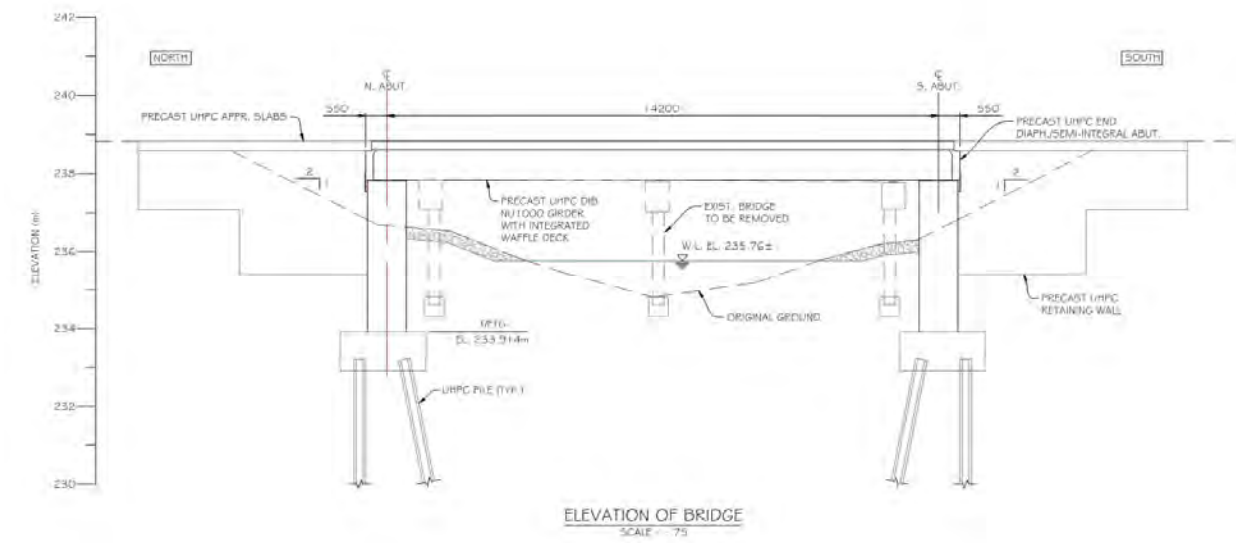

Figure 1. Proposed UHPC DIB Bridge Elevation

This article provides a summary of the development of the UHPC Decked I-Beam (UHPC DIB) covered in two previous papers. However, this article primarily focuses on the further optimization of the UHPC DIB system and discusses the introduction of innovative details for accelerated bridge construction including precast semi-integral abutments and end diaphragms with vertical UHPC closure joints.

BACKGROUND

A beam having the general shape of the NU I-girder was found to be a reasonable starting point. The Federal Highway Administration (FHWA) and the state of Iowa have successfully used a waffle slab deck (2). This inspired our team to try to use a similar ribbed slab deck system that is integral with the web and bottom flange. Several trials produced the section shown in Figure 2.

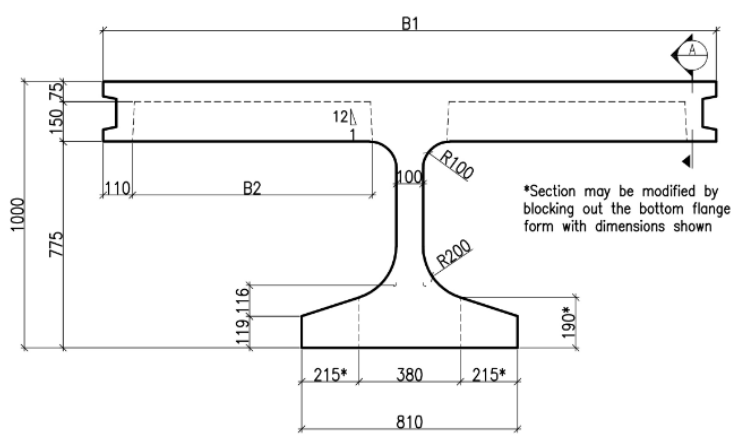

Figure 2. 1000 UHPC Decked I-Beam with Variable Top Flange

As the team attempted to develop the shape to a family of sizes for spans up to 60 m (197 ft), we had to make the top flange large enough to accommodate the longer spans. The top flange is also sized to fit in a tractor trailer without the need for oversize permit for transportation. As a result, it was decided to keep the same shape of top flange, bottom flange and web width.

Thus, the variables for various sizes are:

1. The total depth of 1000, 1500, and 2000 mm. Figures 2, 3, and 4, respectively.
2. The top flange width (B1) of 1000, 1500, 2000, 2500 and 3000 mm.
3. The bottom flange can be blocked out to produce a narrow bottom flange in order to save concrete volume for designs that do not require the full bottom flange.

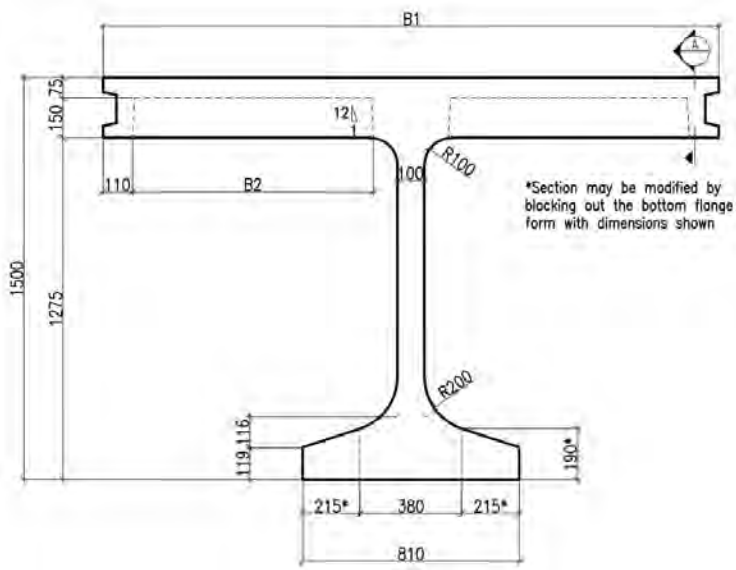

Figure 3. 1500 UHPC Decked I-Beam with Variable Top Flange

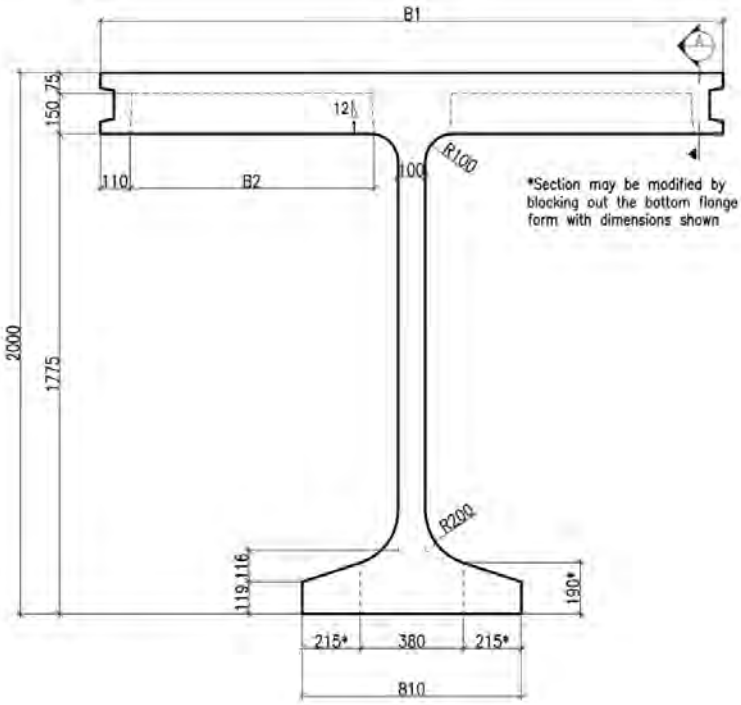

Figure 4. 2000 UHPC Decked I-Beam with Variable Top Flange

For the proposed vehicular bridge, a section size was developed for a 15 m (49 ft) span would lead to a total depth of 1000 mm (39.3 in.); the shortest of the family of girders. The overall girder height of 1000 mm consists of a bottom flange similar to the NU I-Girder for placement of prestress strand, a thin web measuring 100 mm (3.9 in.) in width, and a variable width waffle deck top flange. Development of the 1000 mm girder forms and small-scale testing is currently underway with plans to install a new privately-owned vehicular bridge in Shanty Bay, Ontario, Canada for demonstration and evaluation in early 2020. Note that the 1000 mm depth is capable of spanning longer than the 15 m span of the demonstration bridge. It was developed with the intention to have a series of sizes covering spans up to 60 m (197 ft).

The demonstration bridge will be a two lane 9.8 m (32 ft) wide bridge with a single span of 14 m (46 ft). It will consist of four 1000 mm deep girders at 2475 mm (8 ft) spacing. The decked section eliminates deck forming at the bridge site. Instead, the girders will be joined together with three longitudinal UHPC closure pours, see Figure 5. The typical joint detail consists of a 200 mm (7.9 in.) wide gap with an additional 50 mm (2.0 in.) keyway in each girder flange. The keyways ensure load transfer from one flange to the other and the 200 mm wide gap allows for splicing of transverse reinforcement within the joint for deck continuity. It is important to note that the development length and rebar splice length in UHPC is reduced significantly because of the concrete's material properties. The 150 mm (5.9 in.) splice detail provided is adequate for reinforcement up to 20M (#6) bars (3).

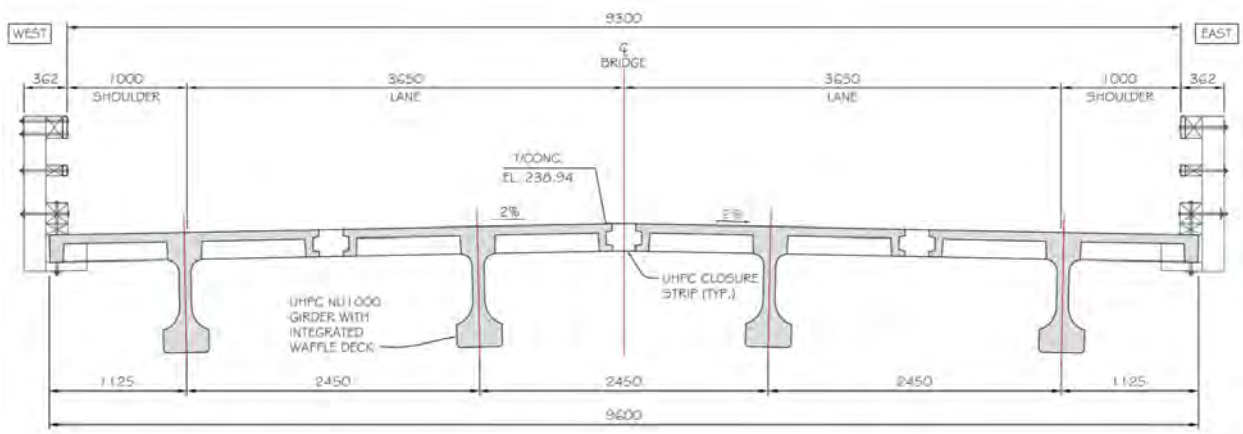

Figure 5. Proposed UHPC DIB Bridge Precast Modules with UHPC Closure Joints

The integrated deck (top flange) incorporates details of a waffle slab to minimize the quantity of UHPC material. The transverse ribs are spaced at 500 mm (19.7 in.) to house the transverse deck reinforcement and the longitudinal rib locations are based on bridge geometry.

The web has the most significant impact on concrete quantities and girder weights. In some applications in Ontario, typical girder products have webs 150 mm or wider. This product has a web which is reduced to only 100 mm providing just enough space for a single leg vertical bar (stirrup) with sufficient cover on each side; should shear reinforcement be required. For the bridge layout and the load conditions of the demonstration bridge it was found that the beam ends require some conventional reinforcement for local effects due to prestressing, but otherwise no additional shear reinforcement is required.

The bottom flange is designed to be able to hold up to 60 – 15.2 mm (0.6 in.) diameter strands at 40 mm (1.57 in.) spacing, or up to 42 – 17.8 mm (0.7 in.) diameter strands at 50 mm (2.0 in.) spacing. Each girder of the demonstration bridge will only require 14 – 15.2 mm (0.6 in.) diameter prestressed strands. Later, it was decided to block out 215 mm (8.5 in) on each side of the bottom flange from 810 mm (31.9 in.) wide down to 380 mm (15.0 in.). This resulted in two benefits: (1) less UHPC material is required reducing production cost and product weight and (2) the prestress strands are concentrated near the web area reducing local stress distribution and avoiding possible cracking due to splitting forces.

As shown in Figure 5, due to the traffic volume and usage requirements at this location, the bridge railings are TL-2. The capacity provided in the UHPC DIB deck overhang seems to justify up to a TL-4. However, testing is recommended before going to the higher level.

WAFFLE DECK OPTIMIZATION

The UHPC waffle deck slab is designed to be cast integrally with the girder having concrete ribs spanning in transverse and longitudinal directions. The width of transverse and longitudinal ribs was chosen based on the side cover requirements for the reinforcement with tapering of the rib for easy removal of panel formwork. The longitudinal rib spacing is determined by the bridge layout and the girder spacing. The reinforcement required in the transverse direction along with the capacity of the flat plate deck element determines the transverse rib spacing.

The reinforcement needed to resist the design wheel loads is provided in the ribs in both directions. It had previously been recommended to limit the transverse spacing to 300 mm (11.8 in.) in order to maintain one rib underneath a wheel at all times and limit any local damage to the flat plate deck element and control cracking of the panel under service loads. However, the authors believe that by further utilizing the material properties of the UHPC and by introducing high strength, corrosion resistant steel, ChrōmX, the design can allow the rib spacing to be increased to 500 mm (19.7 in.). This would further reduce the number of ribs in the top flange resulting in more economy by using less of the relatively expensive UHPC.

The design of the beam in the longitudinal direction did not consider the fiber strength of the UHPC as the strength gained from the fibers did not provide significant savings toward the reduction of prestressing strand. However, the waffle deck is conventionally reinforced and does not benefit from prestressing like the longitudinal direction. Therefore, the fiber strength was taken into account for flexural strength design.

The stress-strain compatibility procedure was utilized to determine the nominal moment capacity of a T-beam consisting of one rib and its tributary flat plate deck element. This procedure requires an iterative process and takes advantage of the tensile strength of the UHPC. The stress-strain curve for UHPC was simplified, as shown in Figure 6, where the curve plateaus at an assumed value of 15 MPa (2.2 ksi) and ignores any additional strength from strain hardening. The fibers are then assumed to have an ultimate strain limit where once the fibers reach this limit, they are assumed to lose their effectiveness. This strain limit was assumed to be 0.005.

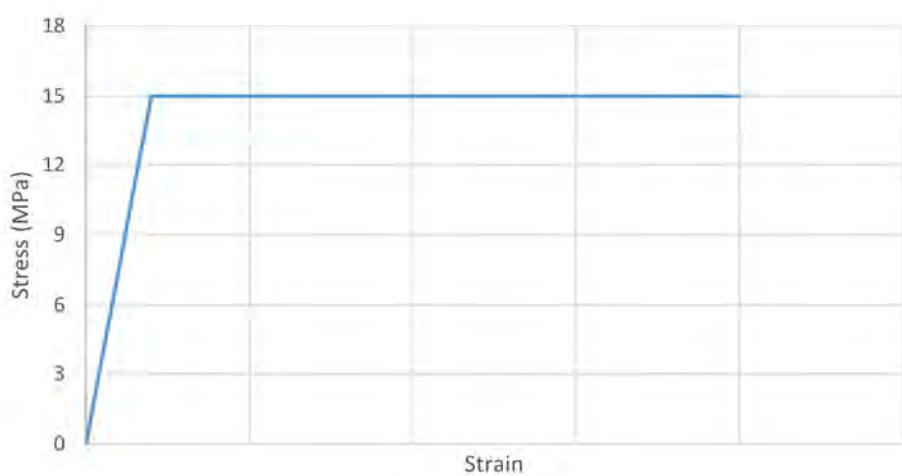

Figure 6. Assumed UHPC Stress-Strain Curve

The flexural analysis showed that 15M (#5) ChrōmX bars at 500 mm (19.7 in.) spacing at the bottom of the rib satisfies transverse positive moment demand due to the design truck.

For negative moment, the flexural analysis has the tension in the relatively wide deck plate and the compression in the stem of the T-beam. The member has typical tension reinforcement in the top plate, there is also concrete tension due to the fibers in the UHPC, as well as concrete compression and compression steel in the stem.

The flexural analysis of this T-beam section led to an interesting result. It was found the stress-strain compatibility calculation resulted in two solutions. There is one equilibrium solution where the neutral axis is near the center of the member. The deck fibers in the top plate have not yet reached their assumed strain limit. Therefore, there is a relatively large amount of UHPC deck fibers in the top plate providing tensile resistance along with the reinforcing steel.

However, there is a second solution where the neutral axis is further down in the stem. As the member is subject to further loading, the fibers in the top plate all reach their assumed strain limit and become ineffective. A small amount of UHPC fibers in the stem then begin to provide tensile resistance along with the now yielded tension reinforcement and equilibrium is once again obtained.

It was determined that the fiber capacity was adequate assuming a relatively low resistance factor. However, for the sake of redundancy, and pending full-scale testing, it was decided to also include 15M (#5) ChrōmX bars at 250 mm (9.8 in.) spacing in the top of the deck.

In Ontario, Canada, due to the extensive application of deicing salts on its bridges during winter months, the bridge decks are commonly overlain by waterproofing and asphalt pavement. For the demonstration bridge, with the superior durability properties of the UHPC, such as very low chloride ion penetrability (RCP < 100 Coulombs), and the use of corrosion resistant reinforcing bars, we have elected to leave the bridge deck exposed. We are currently looking at installing instrumentation to monitor the long-term performance of the bridge deck for the demonstration bridge.

PRECAST SEMI-INTEGRAL ABUTMENT DIAPHRAGM

Details have been developed to implement a precast semi-integral abutment design with the UHPC Decked I-Beam. The diaphragm will be a second stage UHPC precast element that will have a vertical joint similar to the one used for the deck, shown in Figure 5. The closure pour will make the diaphragm one continuous element and can be cast at the same time as the deck splice joint. Any reinforcement needed to resist the backfill and compaction pressure against the superstructure will be projected out and spliced using UHPC in the joint closure pour, as can be seen in Figure 8.

In order to transfer the approach slab loads down into the bearings, the loads must be transferred from the diaphragm into the DIB. Smooth UHPC cold joints have very low interface shear capacity. Therefore, trapezoid deformations will be precast into the DIB at both ends of the beam using form liners. The trapezoidal sections will force a shear failure plane to pass through the UHPC engaging the high shear friction capacity of the fibers. Additionally, 6-15M (#5) steel reinforcement will be provided to ensure there is a clamping force between the two elements.

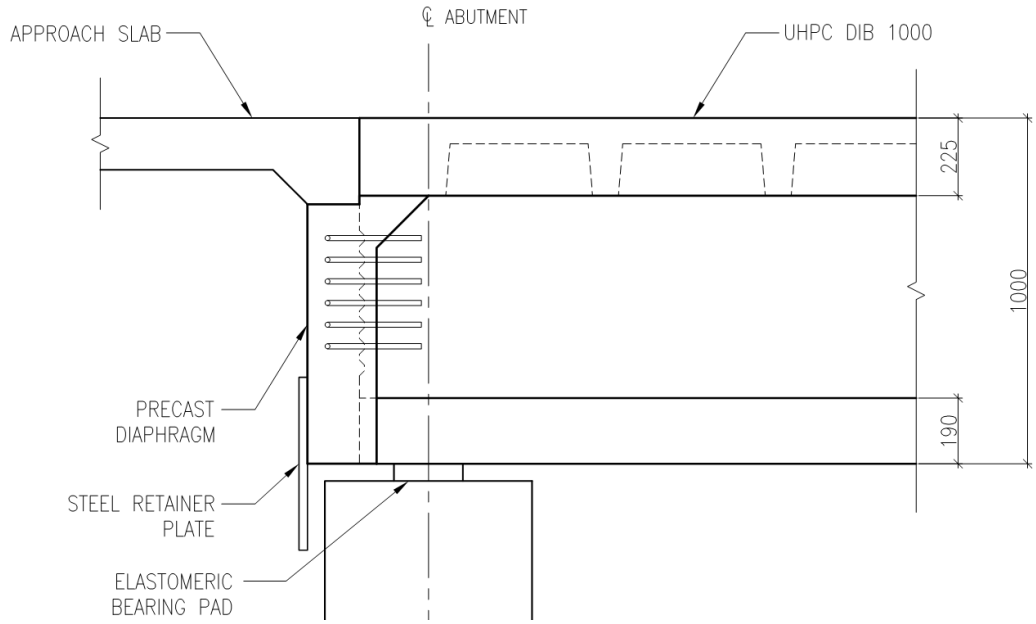

Figure 7. Abutment Detail (Typical reinforcement not shown for clarity)

With the precast end diaphragms, there is a need for a vertical closure joint to connect the adjacent diaphragms, as shown in Figure 8. The vertical closure joints will be formed and cast with UHPC at the same time as the deck closure joints.

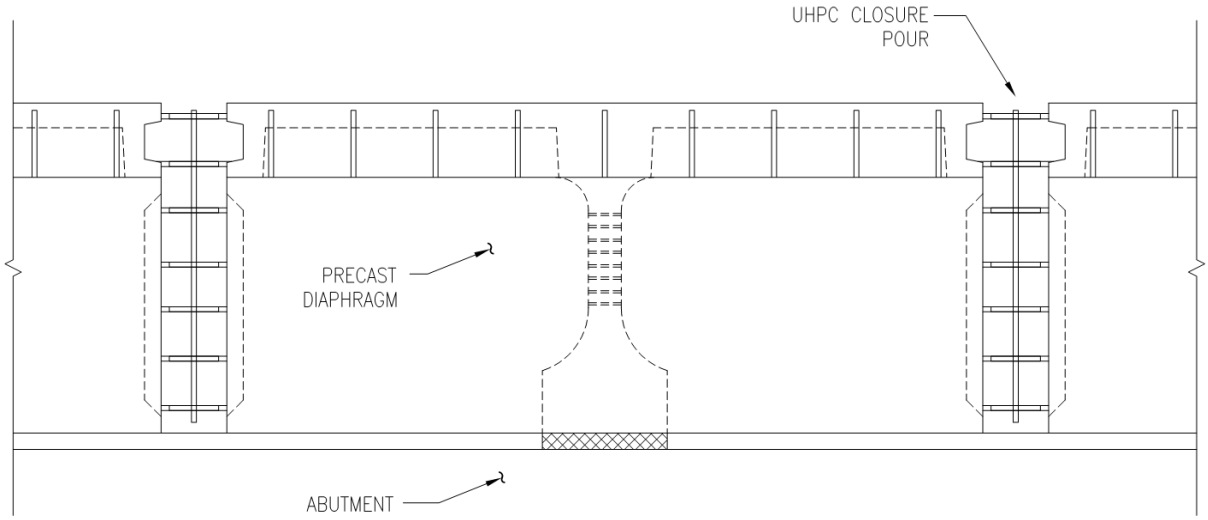

Figure 8. Elevation of Proposed Precast End Diaphragms with Vertical Closure Joints

TESTING PROGRAM

A full-scale specimen and several small specimens are being created for the purpose of verifying the design assumptions and to gain additional knowledge for further refinement of the design.

A full-scale, 15 m (49 ft) beam will be cast per the expected design for the demonstration bridge. Each end will be provided with a UHPC second-stage precast end diaphragm to provide adequate anchorage for the strands. The strands will be bent and embedded into the diaphragm. This anchorage will enhance the shear behavior of the beam. The anticipated full-scale tests include the following:

1. Flexure: The beam will be loaded gradually during the flexure test to reach a maximum load exceeding the actual service loads of the bridge. However, loading up to flexural failure is not planned in order to preserve to specimen for other testing.
2. Shear: One shear test will be conducted on each end of the beam for a total of two shear tests. The bearing dimensions and locations of the tested end should match the actual beam bearing expected at the abutment of the demonstration bridge.
3. Transverse tests: Top flange sections are expected to be retrieved using saw cuts to create small specimens of the top flange in order to create the longitudinal UHPC closure pour connection between the pieces for further testing similar to that described below.

Small specimens are being created for the purpose of verifying specific design assumptions. The small specimen testing including the following:

1. Punching shear: It is essential for the waffle deck skin to be able the transfer wheel loads to the ribs of the waffle deck. This test will demonstrate whether to rib spacing of 500 mm is adequate, or needs to be reduced to a smaller spacing.
2. Negative moment in the deck: Once the wheel loads are transferred to the ribs of the waffle deck, the deck is assumed to act like a series of T-beams transferring the deck loads to the girder webs. This test will further help to demonstrate whether to rib spacing of 500 mm is adequate, or needs to be reduced to a smaller spacing.
3. Positive moment in the deck/joint: This test will also prove the adequacy of the joint pour and the design connection capacity.
4. Web bending: The lateral bending of the beam web may be a critical aspect during shipping, erection and the casting of the joint, especially if heavy equipment is used on the deck before the longitudinal joint achieves adequate strength. After the joint has set up and the deck has gained continuity, bending in the web is not anticipated to be critical. This test will provide insight into the shipping and handling stability of the beams during the construction process.

Figure 9. Web Bending Small Specimen

DISCUSSION

The decked I-beam satisfies the design criteria as currently known for UHPC. While certain elements theoretically meet design requirements, they should be tested experimentally. Prototype pieces and small specimens are currently being cast for element testing. The web width of only 100 mm (3.9 in.) is being tested for shear and diagonal tension behavior as well as overturning due to the top-heavy nature of the shape. Multiple tests are being conducted of the waffle deck with ribs spaced at 500 mm (19.7 in.) such as punching shear and flexural capacity, both positive and negative, including the closure pour joint capacity.

The various innovative details discussed in the preceding sections allow for the structural elements to be precast with the objective of meeting ABC requirements.

Casting of the structural components, including a full-size DIB for testing is planned to be completed by the time of this conference. The conference presentation will therefore be expected to show photos of production, handling and testing of the bridge components.

CONCLUSION

The proposed series of UHPC Decked I-Beams (UHPC DIB) is shown to be applicable to spans up to 60 m. These shapes, along with the formwork concepts developed offer ease of production and construction while still providing superior long-term performance.

Summarized below are some specific areas that might be worth further research for a variety of reasons, such as precast production, cost savings or code development.

1. According to FHWA, UHPC should not see load application below 100 MPa (14 ksi) compressive strength. This includes transfer of the strand forces at the time of release. The time required to reach 100 MPa may require the product to remain in the precast bed for several days slowing production turn-around.
2. Tensile strength at release used in calculations was assumed to be proportional to compressive strength gain. According to FHWA, tensile strength within UHPC develops faster than compressive strengths, but no guidance is provided. While debonding of strand was not required in this example, with the proportional tensile strength assumption future products may require debonding unless guidance for using higher tensile strengths is developed.
3. Limited data is available on the punching shear capacity of UHPC. Additional data on punching shear may allow the deck “plate” thickness to be reduced, leading to a significant reduction in the amount of UHPC material required.
4. Further research into prestressing local effects utilizing the tensile strength of UHPC could led to a reduction of the end bursting and strand confinement reinforcement, specifically the requirements of CSA Article 8.16.3.2.
5. A number of creep tests have indicated that the creep of UHPC is much less than conventional concrete (Russell 2013). Lower creep values will result in reduced prestress losses which can be detrimental if relied on to reduce stresses in restrained members. More testing should be performed to get a better handle on this material property.
6. The capacity provided in the deck overhang seems to justify up to a TL-4. However, testing is recommended before going to the higher level.

ACKNOWLEDGEMENTS

The authors thank FACCA, Inc., Ontario, for financial support of the study reported in this project. The employees of FAACA have demonstrated ingenuity in creating a forming system for this unique UHPC DIB shape that allows the product to be made in one stage without a “cold” joint. A number of MTO personnel have provided the motive behind the development of the UHPC DIB and continuing support of the progress made so far. William Nickas, Director of Transportation at the Precast Prestressed Concrete Institute (PCI) has been an inspiration and a strong driving force for precast industry adoption of the new and exciting UHPC material in full sized members.

REFERENCES

1. Canadian Standards Association (CSA), “Canadian Highway Bridge Design Code,” Canadian Standards Association, 2014.
2. Aaleti, S., Petersen, B., and Sritharan, S., “Design Guide for Precast UHPC Waffle Deck Panel System, including Connections,” FHWA, U.S. Department of Transportation, Report No. FHWA-HIF-13-032, 2013.
3. Russell, H. G. and Graybeal, B., “Ultra-High Performance Concrete: A State-of-the-Art Report for the Bridge Community,” FHWA, U.S. Department of Transportation, Report No. FHWA-HRT-13-060, 2013.
4. American Association of State Highway and Transportation Officials (AASHTO), “AASHTO LRFD Bridge Design Specifications,” American Association of State Highway and Transportation Officials, 2014.
5. Crane, C., “Shear and Shear Friction of Ultra-High Performance Concrete Bridge Girders,” Diss. Georgia Institute of Technology, 2010.

PERFORMANCE EVALUATION OF UHPC FIELD CAST CONNECTIONS FOR HOOPER ROAD BRIDGE PROJECT

Peter J. Seibert, Trebona Consulting Inc., peter@trebona.com
Vic H. Perry, V.iConsult Inc., vhperry@gmail.com
Gaston Doiron, LafargeHolcim, gaston.doiron@lafargeholcim.com

ABSTRACT

A project overview and a performance evaluation of the field cast UHPC connections for the Hooper Road Bridge after four years of service are presented. The original intent and observed performance of the link-slab, pier to column, transverse deck panel, and hidden composite field cast UHPC connections are illustrated, assessed, and discussed. The fundamentals of the technology, materials properties, original project design criteria, ABC requirements, and benefits for using UHPC as a field cast connection material are included.

The various types of UHPC connections are performing well and are either meeting or exceeding the original design assumptions. The absence of cracking, scaling, reflective cracking, joint leakage or other deterioration within the UHPC supports that the material is performing as expected. In contrast, multiple random cracking was revealed in the precast deck panels beside, parallel and perpendicular to the UHPC connections throughout the entire structure. This visual performance evaluation is consistent with similar observations as noticed on more than 60 bridge inspections across North America over the last decade.

INTRODUCTION

Ultra-High Performance Concrete (UHPC) has been utilized in new and retrofit bridge construction across North America in various applications such as precast bridge elements, field cast connections, overlays, pier jacketing, and seismic retrofit for the past 20 years. Its unique characteristics of ultra-high strength, short bond development length and durability offer a great solution for the use as field cast UHPC connections for precast concrete bridge elements.

The use of precast High Performance Concrete (HPC) deck panels is a common method to speed up construction and to alleviate user inconvenience during initial construction or rehabilitation; however connecting the precast system is a source for premature failure, leakage, and potential maintenance. Utilizing field cast UHPC with precast bridge elements can significantly extend the usage life of critical bridge structures and reduce the maintenance requirements due to its durability performance. Its short bond development length allows for simpler connections with reduced rebar congestion and narrow joints compared to other conventional grouting methods. During the construction or rehabilitation, UHPC facilitates Accelerated Bridge Construction (ABC), speeds up the construction cycle, and minimizes traffic delays to the general public.

THE UHPC TECHNOLOGY

As per the ACI 239 Committee (1), "Ultra-High Performance Concrete (UHPC) is a cementitious, concrete material that has a minimum specified compressive strength of 22,000 psi (150 MPa) with specified durability, tensile ductility, and toughness requirements; fibers are generally included to achieve specified requirements". Some jurisdictions (Canada & Switzerland) specify a minimum compressive strength of 17,400 psi (120 MPa) (2). The material matrix is typically manufactured from combining fine materials such as sand (< 400 microns), ground quartz, Portland cement, and silica fume with steel fibers (13 mm x 0.2 mm diameter) in a high dosage rate of 2% by volume. Durability properties are at least one order of magnitude better than most durable HPC and its long-term performance has been monitored since 1995 (3).

When compared to conventional concrete or HPC, UHPC is its own class of advanced cementitious material due to its higher compressive strength, tensile ductility, bond development, and enhanced durability properties. These unique properties are a direct result of the low permeability pore structure

and the addition of fibers. UHPC is a family of products with different formulations that are used for different applications such as highway bridges, pedestrian bridges, bridge overlays, field-cast connections, security and architectural facades. UHPC formulations vary in raw material ingredient dosages, fiber types and curing regimes and are now available from multiple suppliers.

FIELD CAST UHPC APPLICATIONS FOR BRIDGES

UHPC field connections for precast bridge elements are very popular for ABC, rehabilitation and new construction in North America. This innovative solution has been utilized in North American bridges since 2006 and over 250 bridges are in service (4).

Field cast UHPC connections are to connect full depth precast deck panels, side-by-side box girders, side-by-side Deck Bulb-Tees, live-load continuity connections, precast approach slabs to abutments, curbs to decks, piles to abutments, columns to pier caps and in the haunches to provide horizontal shear for composite construction (5). Field cast UHPC has also been utilized for pier repairs and retrofit projects across to enhance the structural and durability properties of an existing structure through jacketing, seismic retrofit, and encasement construction techniques (6).

HOOPER ROAD BRIDGE PROJECT OVERVIEW

Existing Structure

With a total length of 150', the 3-span, 2 lane Hooper Road bridge over NYS Route 17C in Union, NY was originally constructed in 1964 (Fig.1). Hooper Road is an urban, arterial road that accommodates large traffic volumes (ADT 10,000) and is a critical link between the local community and the City of Binghamton, NY. Years of continuous impact loading from vehicles and continuous exposure to deicing salts resulted in serve deterioration of the bridge.

Fig.1: Hooper Rd. Bridge Prior Rehabilitation

Fig.2: Leaky Joints (7)

Fig.3: Deteriorated Pedestal (7)

Leaky and failed joints (Fig.2) resulted in a widespread deterioration of the bearing pedestals (Fig.3) and piers (7). The pier concrete was also cracked and delaminated; whereas areas of the deck showed additional deterioration. In 2013, the condition of the bridge structure was assessed at a rating of 4.45 and an FSR of 68.3 determining that rehabilitation of the bridge is required (7).

Rehabilitation Options

The primary objectives were to restore the bridge condition using cost effective techniques while minimizing the life cycle cost of the maintenance and repair. The secondary objectives were to utilize construction techniques to minimize traffic to Hooper Road and to minimize impacts to NYS Route 17C during construction.

In total, four rehabilitation alternatives were considered using either conventional construction techniques or ABC methods. The conventional construction would require bridge rehabilitation in halves where one lane of traffic on Hooper Road always remains open to traffic and would impact traffic for 4 to 5 months during construction. The two potential alternatives using conventional construction techniques were either a deck replacement or a superstructure replacement. The ABC methods would use prefabricated bridge elements and a total road closure resulting in a traffic impact of 2 to 4 weeks. The two potential alternatives utilizing ABC were either superstructure replacement or a complete bridge replacement.

Preferred Alternative

As the preferred alternative, an ABC superstructure replacement with full depth precast deck panels, new steel girders, precast pier caps and precast approach slabs was selected (7). The owner specified a 21-day Hooper Road closure with only two open lanes for NYS Route 17C and liquidated damages of $5,000/day. This option was considered to have reduced user costs and was strongly favored by the public due to the short-term closure.

Completed ABC Project

The Hooper Bridge rehabilitation project was designed by McFarland Johnson in 2013 and executed by Economy Paving in 2014. Field cast UHPC was utilized for the precast pier cap to existing columns connection, for the link slab connections, panel to beam connections and for the precast deck panel connections. The ABC was completed within 21 days without any liquidated damages at a construction cost of $1,600,000. Overall, the project was well received by the community and received a lot of positive feedback.

BRIDGE INSPECTION

The first round of field visits and visual condition survey was conducted on more than 40 bridge structures with field cast UHPC connections in 2012 where the findings of six of these bridges have been published (8).

In November 2018, a second round of a total of 20 New York State bridges with field cast UHPC connections including the Hooper Road bridge (Fig. 4) were visited and visually inspected. The weather conditions were cold, snowy and changeable between wet and dry for several days leading up to the field visits with temperatures around the freezing point. Even though these conditions seem not favorable for the inspectors, the continuous wetting of the bridge deck for several days provided favorable inspection conditions for leakage and crack detection. Several of the recently inspected bridges, each with varying types of typical field cast UHPC connections have been recently published (9).

The main focus of this paper is to present the results of the visual inspection and the four year performance evaluation of the four ABC field cast UHPC connections of Hooper Road over NYS Route 17C in Union, NY: a) precast pier cap to existing columns connection, b) link slab connections, c) transverse precast deck panel connections, and d) hidden composite connection between precast deck panel and steel girder.

Fig. 4: Hooper Road Bridge Inspection

PRECAST PIER CAP TO EXISTING COLUMNS UHPC CONNECTION

Background

The original bid documents only specified field cast UHPC for the precast deck panel connections and slabs. The contractor (Economy Paving Company) had previously used UHPC on other bridge deck projects and felt that the project schedule was a little bit too aggressive. Upon contract award, the contractor turned his attention to the specified connection for the new precast pier caps to the existing pier columns (Fig. 5).

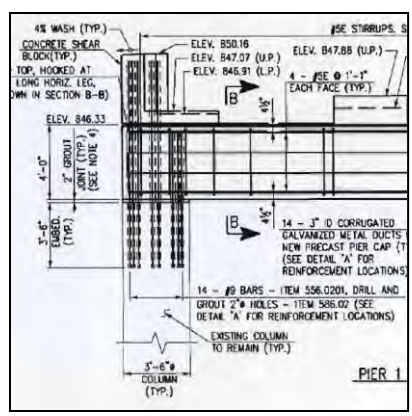

Fig.5: Originally Specified Pier Cap Connection

The originally specified detail of the precast pier cap required fourteen 3 in (75 mm) ducts for each column which would match new 2 in (50 mm) diameter holes that were to be drilled to a depth of 3 ft 6 in (1.07 m) in the existing columns. A total of 84 holes would be required. The contractor was very concerned that the existing rebar cage was not exactly located where it was specified on the original drawings. It was also deemed quite challenging to locate the existing rebar when drilling the new holes and to match these drilled locations with the ducts cast in the new precast pier caps (6).

UHPC Connection & Installation

Since UHPC was already specified for other portions of this project, the contractor saw an opportunity to propose a field cast UHPC connection for the precast pier caps to existing columns. Rebars from the existing columns were exposed to create continuity with new rebars extending from the underside of the new precast pier caps (Fig. 6). Due to the short development length of #9 (nominal area 1 in^2 or 654 mm^2) dowels in UHPC, it was determined that an 11 in (280 mm) development length was sufficient to achieve the required load transfer.

Fig. 6: Rebar Connection

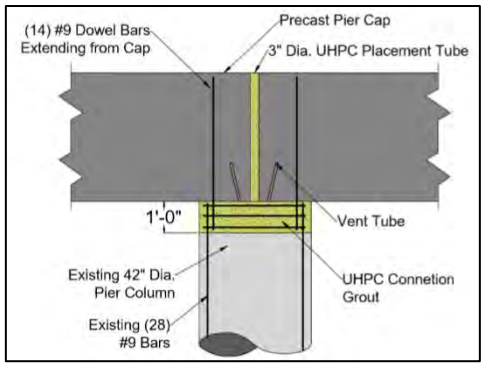

Fig.7: UHPC Placement (10)

Fig.8: Completed Connection

The existing rebars on the outer edge of the existing columns were exposed and cut to allow the 11 in (280 mm) splice. By leaving a concrete pedestal at the center of the existing columns, steel shims were used for final height adjustments and to provide spacing for the UHPC material flowing down the central placement duct. The precast cap had rebars extending downward the same distance.

Actually, the rebar extensions from the precast element were threaded dowels making the precast element flat and easier to handle during fabrication, transportation and erection. Once the new pier cap was lowered on the concrete pedestal of the existing columns, the rebar extensions were threaded into the precast cap and UHPC was poured around the rebar trough a 3 in (75 mm) diameter grouting duct at each column location. Two small bleeding ducts ensured no voids in the completed connection (Fig. 7). Heated blankets and monitoring thermal couples were used to minimize the curing time and allow a faster construction.

This field cast UHPC connection (Fig. 8) saved two days on the construction schedule and allowed easy adjustments to set the elevation and place the new precast pier caps. It also eliminated the uncertainty of misalignments and the individual grouting of 84 ducts.

Performance Evaluation

A visual inspection of the precast pier cap to existing column connection showed no evidence of any reflective cracking within the UHPC for both pier caps after four years in service (Fig.9). Upon closer inspection vertical cracks were noticed in the existing concrete column and the precast pier cap but seem to disappear within the UHPC connection (Fig. 10). The authors believe that micro and non-visible to the eye cracks are present in the UHPC connection and that they are spread across multiple micro cracks which are bridged by the fibers in the UHPC matrix. This appears to be very similar when testing precast panels with UHPC connections under flexural cycling loading, where single structural cracks in conventional concrete precast panels tended to become multiple, tightly spaced cracks in the field-cast UHPC (11).

Fig. 9: Precast Pier Cap/Column Connection

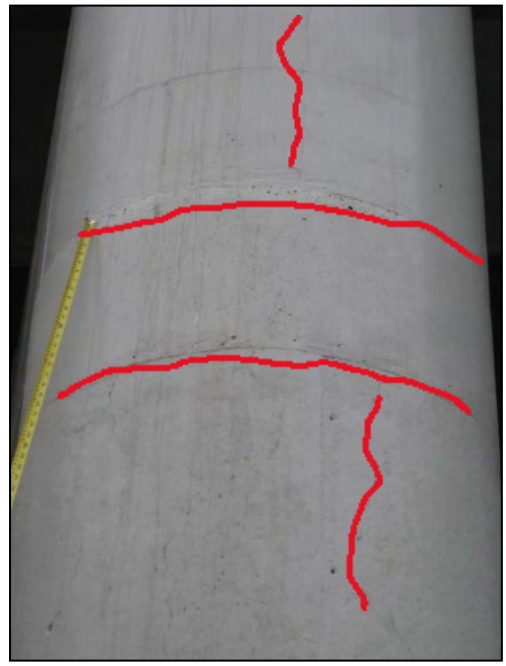

Fig. 10: Vertical Cracks in Column & Pier Cap

UHPC LINK SLAB CONNECTION

Background

Link slabs connections are located above the interior supports of multiple, simple span bridge structures and are designed to resist tensile forces due to the negative moment from live-load on the structure. The intent of the connection is to eliminate the need for strip seals or other traditional joint systems by creating a durable structural element spanning between the adjacent bridge decks (12). This prevents ingress of water and maintenance of the joint is eliminated (13). The Hooper Bridge was designed (Fig.11) and installed with two link slabs (Fig. 12).

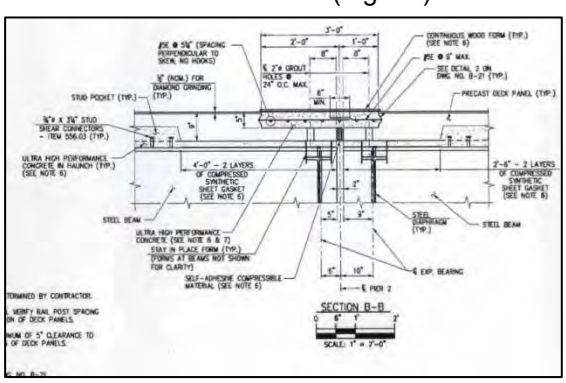

Fig.11: UHPC Link Slab Design

Fig.12: Installed UHPC Link Slab

Performance Evaluation

The visual inspection showed no evidence of reflective cracking in field cast UHPC link slabs above both piers (Fig. 13). No leakage through the UHPC link slab was noticed. Water draining down the side of the deck at the piers was seen causing some surface rust staining of the steel fibers. Only one longitudinal crack parallel to the link slab connection was noticed in the precast deck panel above the South Pier (Fig. 14) which may have been caused due to the negative moment over the pier of the bridge structure. This

indicates that the UHPC link slab maybe too stiff and stronger than the adjacent panel and thereby inducing too much tensile stress into the conventional concrete precast panel.

Fig. 13: North Pier Link Slab

Fig.14: South Pier Link Slab

UHPC PRECAST DECK PANEL CONNECTIONS

Background

Adjacent Lab Splice Deck Panels Connections

The precast bridge deck panels use rebar projecting from each panel into the space between the panels which is filled with UHPC to form the connection. This connection transfers moment, shear, and tensile forces across the joint using short, straight rebar spaced at intervals typical to conventional deck design. The width of the connection is based on the rebar development and lap-splice lengths plus construction tolerance and is between 6 and 8 inches (152 and 203 mm) (12).

The Hooper Road Bridge utilized field cast UHPC connections in the transverse direction between the precast deck panels as well as between the approach slabs (Fig. 15).

Deck Panel to Girder Composite Connection

The Hooper Road project utilized a hidden-pocket composite connection where a continuous pocket is created above the girder line and then filled with field cast UHPC. The composite action is generated through the transfer of forces between the girder, with Nelson-studs and deck panel through UHPC (12). A total of four steel girder lines across three spans were made composite with the precast deck panels (Fig. 16).

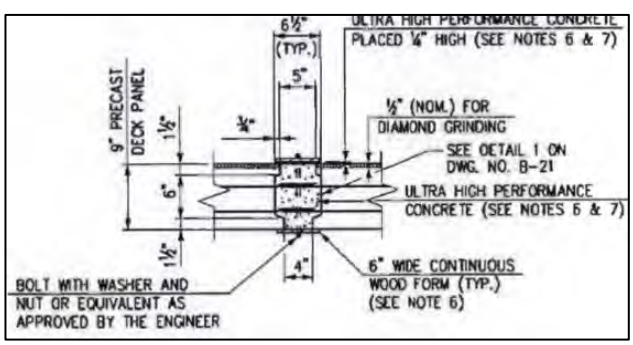

Fig. 15: Deck Panel Connection

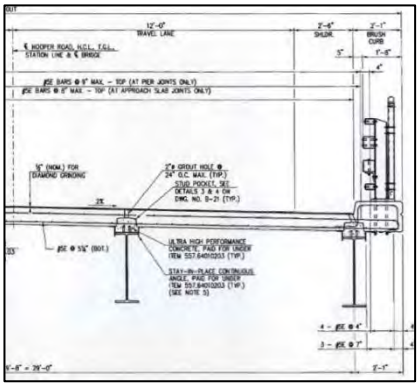

Fig. 16: Hidden Composite Connection

Performance Evaluation

The visual inspection on top of the bridge deck (Fig. 17) showed no cracking within the transverse field cast UHPC connections. The precast deck panels revealed multiple random cracking beside (Fig. 18), parallel (Fig. 19) and perpendicular to the UHPC connections throughout the entire structure. No leakage below the deck along the UHPC connections was observed. All galvanized channels originally used for forming the UHPC connections showed no rust stains, therefore no leakage is evident (Fig. 20). Water draining down the side of the deck panels were seen causing some surface rust staining of the steel fibers (Fig. 21). Any of the observed deteriorations are not related to field cast UHPC connections.

Fig. 17: Bridge Deck Surface

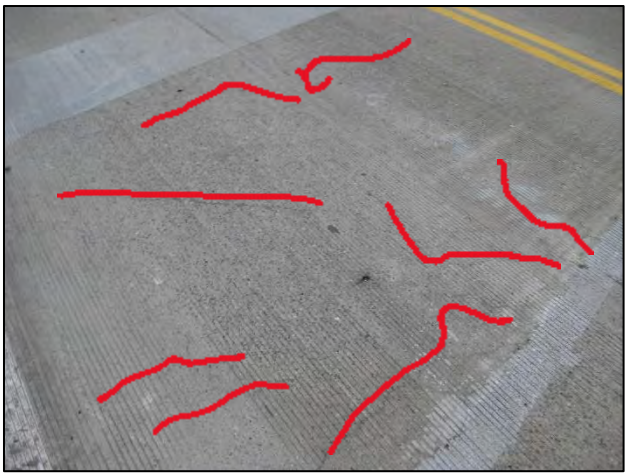

Fig. 18: Multiple Random Cracking in Precast Panel

Fig. 19: Parallel Cracks to UHPC Connection

Fig. 20: Bridge Deck Underside

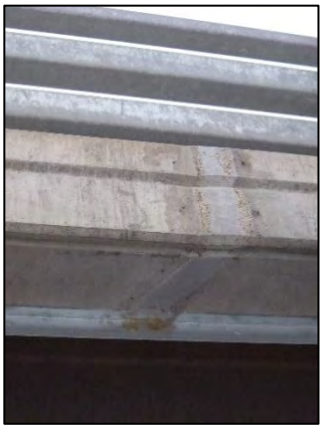

Fig 21: Transverse Joint

OTHER DETERIORATION MECHANISMS

Other bridge components appear to have started to deteriorate. This was especially noticed with the multiple cracks in the precast deck panels with some appearing to be full depth cracks with leakage (Fig. 22). This will allow future deicing salts to penetrate the concrete deck panels attacking the steel reinforcement. In addition, the expansion joints at the abutments appear to be starting to deteriorate (Fig. 23).

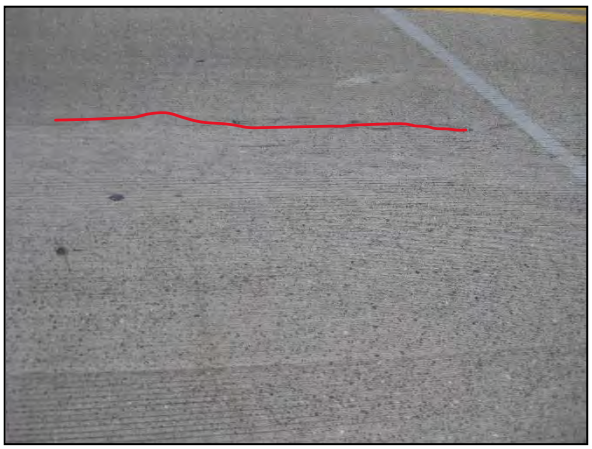

Fig. 22: Longitudinal Crack – Perpendicular to UHPC

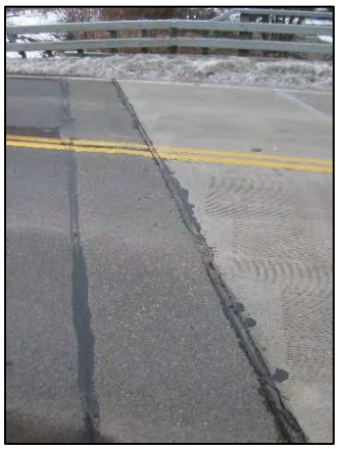

Fig. 23: North Abutment Expansion Joint

CONCLUSIONS

Over 250 bridges with UHPC field connections have been constructed in North America since this solution of using field cast UHPC connections for precast bridge elements was first introduced in 2006. UHPC shows very promising results for building better, more resilient, and longer-lasting infrastructure. Field cast UHPC and precast bridge deck systems can minimize traffic impacts and user costs through ABC while providing highly durable and sustainable bridges

The 3-span with 2 lanes at 150' Hooper Road rehabilitation project illustrated that combining field cast UHPC connections with precast elements is an effective method of designing and constructing an ABC project. This ABC project was completed within 21 days without any liquidated damages at a construction cost of $1,600,000. Field cast UHPC was successfully utilized for the precast pier cap to existing columns connection, for the link slab connections, for the precast deck panel connections in the transverse direction, and for the hidden composite deck to steel girder connection. This project also illustrated that exploiting the characteristics and properties of UHPC allows for faster and simpler connection details where a new concept was developed to connect the precast pier cap to the existing columns.

The 2018 bridge inspections showed that the field cast UHPC connections of the Hooper Road Bridge are either meeting or exceeding the original design assumptions. The absence of cracking, scaling, reflective cracking, joint leakage or other deterioration within the UHPC material supports that it is performing as expected by the designers. In contrast, other bridge components were observed to deteriorate. The Hooper Bridge revealed multiple random cracking in the precast deck panels beside, parallel and perpendicular to the UHPC connections throughout the entire structure. The expansion joints also seem to be in the early phases of deterioration.

The visual evaluation of the Hooper Road Bridge provided similar observations as noticed in the inspections of more than 40 bridges in 2012 (8) and of an additional 22 bridges in 2018 (9) with varying types of field cast UHPC connections where some have been in service for over 10 years. This sample size of inspections provides a level of comfort and added assurance to keep constructing bridges with field cast UHPC in the future. Generally, no cracking, scaling, reflective cracking or other deterioration of UHPC were noticed. In contrast, other deterioration mechanisms of other materials were observed on multiple bridges such as: pavement scaling, ASR, cracks in non-UHPC connections, asphalt rutting, longitudinal asphalt cracking, overlay groove wearing, panel cracking in multiple directions, and expansion joint failing.

The precast elements with UHPC field connections provided a solution to the owner to meet the primary goals of restoring the bridge condition using cost effective techniques while having minimal traffic impact to the general public during the construction. The inspections indicate that this solution is performing well, particularly compared to the conventional concrete in the same structure. This indicates that the future maintenance and repair costs will be reduced compared to conventional solutions.

REFERENCES

(1) ACI 239R-18 Committee – Ultra High Performance Concrete: An Emerging Technology Report, USA, 2018.

(2) Perry V.H., "What Really is Ultra-High Performance Concrete? – Towards a Global Definition", *The 2nd International Conference on Ultra-High Performance Concrete Material & Structures",* Fuzhou, China, November 7-10, 2018.

(3) Thomas M.D.A., Green B., O'Neil E., Perry V.H., Hayman S., and Hossak A., "Marine Performance of UHPC at Treat Island", HiPerMat, 3rd International Symposium on UHPC, Kassel, Germany, 2012.

(4) FHWA: Interactive Map – North American Developments of UHPC in Highway Bridge Construction. Website:https://highways.dot.gov/bridges-and-structure/ultra-high-performance-concrete/deployments, Washington, DC, 2019.

(5) Perry, V.H., and Seibert, P.J., "New Applications of Field Cast UHPC Connections for Precast Bridges", PCI/NBC Conference, Salt Lake City, Utah, USA. 2011.

(6) Doiron, G., "Pier Repair/Retrofit using UHPC Examples of Completed Projects in North America", *First International Interactive Symposium on UHPC,* Des Moines, Iowa, USA. 2016.

(7) Rooney R., "Hooper Road Bridge Rehabilitation", 21st Statewide Conference on Local Bridges, Syracuse, NY, October 21-22, 2015.

(8) Perry V.H., "An Eight Year Review of Field-Cast UHPC Connections for Precast Concrete Bridge Elements & ABC", *9th International Conference on Short and Medium Span Bridges,* Calgary, Alberta, Canada, 2014.

(9) Seibert P.J., Perry V.H., and Corvez D., "Performance Evaluation of Field Cast UHPC Connections for Precast Bridge Elements", *2nd International Interactive Symposium on UHPC*, Albany, NY, June 2-5, 2019.

(10) Haber Z., "Ultra High Performance Concrete", *2016 FDOT Design Training Expo"*, Daytona Beach, FL, June 13-15, 2016.

(11) Graybeal B.A., "Behavior of Field Cast UHPC Bridge Deck Connections under Cyclic and Static Structural Loading", *Report No. FHWA-HRT-11-023"*, Federal Highway Administration, Washington, DC, 2010.

(12) Graybeal B.A., "Design and Construction of Field-Cast UHPC Connections", TechNote - *Report No. FHWA-HRT-19-011"*, Federal Highway Administration, Washington, DC, 2019.

(13) Doiron G. and White P., "UHPC Link Slab Solutions in North America", *AFGC-ACI-fib-RILEM International Symposium on Ultra-High Performance Fibre-Reinforced Concrete,* UHPFRC 2017, Montpellier, France, October 2-4, 2017.

UHPC JOINT FILL CONSTRUCTION PROBLEMS AND SOLUTIONS ON THE PULASKI SKYWAY

Michael D. McDonagh, P.E., P.Eng., WSP USA, (609) 512-3684, M.McDonagh@wsp.com
Andrew J. Foden, Ph.D., P.E., WSP USA, (609) 512-3589, Andy.Foden@wsp.com

ABSTRACT

The redecking of the Pulaski Skyway is the largest implementation of ultra-high performance concrete (UHPC) in North America to date. The construction of the new deck took place over the course of four years in a temperate climate with hot summers and cold winters. The very large quantity of deck, the large volumes of field-placed UHPC, and multiple years of construction with all possible weather and temperature conditions created challenges to successful UHPC placement. This paper discusses the types of problems that arose and the solutions that were developed during the course of the redecking construction project.

INTRODUCTION

The Pulaski Skyway (Figure 1) is a three and one-half mile (5.6 km) long viaduct located in northern New Jersey that serves as a direct link to New York City via the Holland Tunnel. Between 2014 and 2018, the entire mainline deck of the Pulaski Skyway was replaced. Because the Skyway is such a critical part of the greater New York City transportation network, the New Jersey Department of Transportation (NJDOT) wanted to minimize traffic disruptions during the redecking and design the new deck to eliminate any significant deck maintenance for the next 75 years. Consequently, the NJDOT replaced the majority of the nearly 1 million square feet (93,000 square meters) of deck with precast concrete deck panels connected with ultra-high performance concrete (UHPC). Using UHPC with precast concrete deck panels enabled the project to benefit from the higher quality and faster installation of precast concrete panels compared to a conventional cast-in-place concrete deck, while not sacrificing any durability at the connections as is often seen with conventional connection materials.

Figure 1. Partial Elevated View of the Pulaski Skyway

The key properties of UHPC that make it ideal for connecting precast bridge elements include its high tensile and compressive strengths, which lead to short rebar lap splices and thus narrow connections; a fast cure time relative to conventional concrete; a highly flowable, self-consolidating consistency before curing to completely fill connections even if they are congested; and extreme durability represented by very low permeability. The purpose of this paper is not to present the advantages of UHPC in detail, however, as this has been done previously by the authors for the Pulaski Skyway and by others more generally.

The large amount of deck that was replaced resulted in the use of over 5,000 cubic yards (3,800 cubic meters) of UHPC, making it the largest use of field-cast UHPC on a single project in North America to date. The construction duration spanned several years and multiple seasons, and construction work continued regardless of the weather or temperature. Actual temperatures during the construction period dropped to as low as 0°F (-18°C) and rose to as high as 99°F (37°C).

Problems were encountered with UHPC placement, and solutions to those problems were developed through collaboration with the owner, contractor, design engineer, and UHPC material supplier. This paper

makes no assertion as to liability by any party for any issues that arose during construction. The sole purpose of this paper is to describe the problems that were encountered with UHPC and the solutions that were developed, so that this information can benefit future UHPC joint fill projects.

DECK REPLACEMENT STRATEGY

The majority of the Pulaski Skyway deck was replaced with 8-inch (200-mm) thick lightweight precast concrete deck panels. One section of the Skyway deck was widened, and to avoid adding dead load to the existing steel structure due to the extra deck area, unfilled steel grid deck panels composite with 4-inch (100 mm) thick precast concrete on top were used. These panels are commercially known as Exodermic deck panels. To maximize the durability of the deck, stainless steel rebar was used in the full-depth precast concrete deck panels, and galvanized rebar was used in the Exodermic deck panels (to be consistent with the galvanized steel grid). A 1-inch (25-mm) thick polyester polymer concrete (PPC) overlay was placed on top of the deck.

The northbound deck was replaced first while the southbound deck remained open to traffic. After completion of the northbound deck, traffic was switched to the new northbound deck while the southbound deck was replaced.

UHPC USAGE ON THE PULASKI SKYWAY

The Pulaski Skyway redecking used UHPC primarily in the following three locations. The first location is the narrow transverse connections between adjacent precast deck panels (Figure 2). The connections between full-depth precast concrete deck panels are 8 inches (200 mm) wide and the connections between the Exodermic deck panels are 10 inches (250 mm) wide.

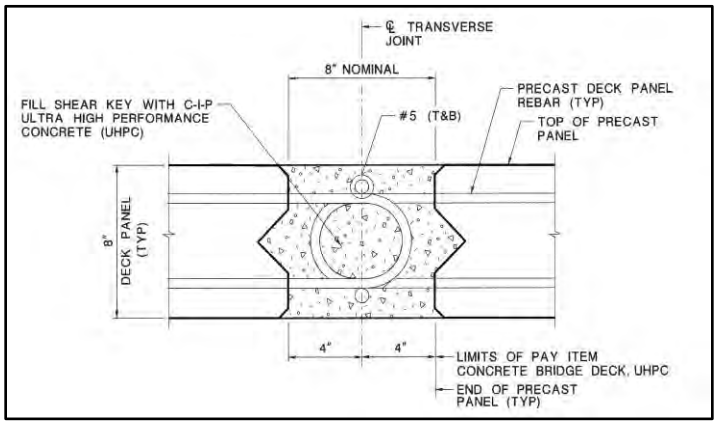

Figure 2. Typical Transverse Panel Connection

The second location where UHPC was placed is in the deck panel shear connections and haunches that connect the deck panels to the steel framing (Figure 3). Shear studs are welded to the steel framing and extend into the pockets or reserves of the deck panels that are then filled with UHPC. The full-depth precast concrete deck panels had discrete pockets in which shear studs were grouped. The Exodermic deck panels had reserves where the precast concrete was blocked out over the entire length of the underlying steel framing, to facilitate shear stud placement which also had to avoid the deck steel grid. Because the shear pockets and reserves are located over the steel framing, the haunches between the bottoms of the deck panels and the tops of the steel framing were poured monolithically with the shear pockets and reserves.

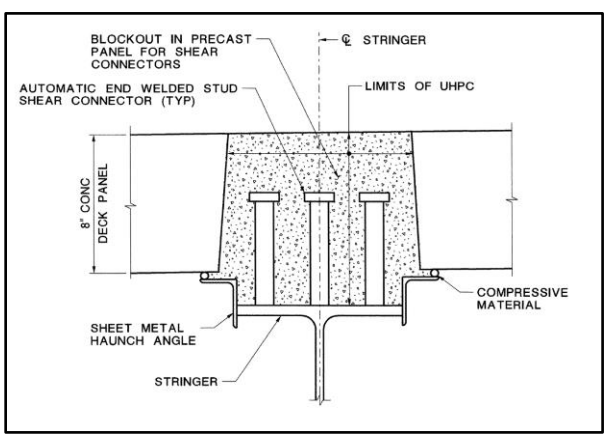

Figure 3. Typical Shear Pocket Detail, As Constructed

The third UHPC location is the longitudinal connection between the northbound deck panels and the southbound deck panels under the median barrier. The two new halves of the deck were connected with UHPC in a full-depth pour that was typically 3-feet (0.9 m) wide.

UHPC JOINT FILL CONSTRUCTION PROBLEMS

This section details the various problems that were encountered with using UHPC to connect deck panels on the Pulaski Skyway, with a description of solutions that were developed.

Problems Caused by Pumping UHPC

To the authors' knowledge as well as that of Lafarge, the UHPC material supplier, the Pulaski Skyway project was the first time that UHPC was placed using a concrete pump. The contractor asserted that there would be efficiency gains due to the ease of transporting the UHPC between the mixers and the placement locations, as well as improved site safety compared to using motorized buggies or wheel barrows to move the fresh UHPC. As a result, Lafarge's on-site technician worked with the contractor and adjusted the properties of the fresh UHPC exiting the mixer.

Typically, every batch of fresh UHPC is tested using a flow test, as defined by ASTM C1856, which in turn references ASTM C1437 with modifications. In order to be acceptable for placement, at the end of the flow test the fresh UHPC should spread to a diameter of between 8 inches (200 mm) and 10 inches (250 mm).

However, when UHPC meeting this specification was put into the pump, the energy imparted by the pump would increase the workability of the UHPC, while the friction of the UHPC passing through the pipe and hose and the exposure of the pipe and hose to the sun increased the temperature of the UHPC, which tends to reduce workability. Thus, it was very difficult to predict the flow of the UHPC out of the pump hose and difficult to know how to adjust the properties of the UHPC coming out of the mixer to compensate. Nonetheless, when the use of a concrete pump began in late fall of 2014, the technician was able to successfully adjust the UHPC properties over multiple batches and pours such that the UHPC exiting the pump hose met the workability criteria for placement (Figure 4).

Figure 4. UHPC Being Successfully Placed with a Pump in Late Autumn of 2014

Figure 5. Long Pump Pipe in Spring of 2015

Figure 6. Partially Removed Form Revealing Underfilled Haunch due to Loss of Workability

As the following spring arrived, however, the ambient temperatures and the prevalence of sunny days increased, resulting in problems ranging from plugged pumps to voids in the cured UHPC (Figure 6) due to a lack of material workability, when the contractor was using over 300 feet of pipe and hose (Figure 5). The solution to the problems caused by pumping was simple – the contractor stopped using a concrete pump and instead started using motorized buggies to transport the fresh UHPC between the mixer and the pour locations. In fact, after temporarily switching to buggies when the NJDOT put a temporary halt on pumping to investigate the situation, it became evident

that there was a significant increase in efficiency with no safety issues and the contractor never sought to use the concrete pump again. Solutions for the voids that resulted when the UHPC lost workability due to pumping will be discussed in the section on repair of deficient UHPC pours.

Problems Caused by Leaking or Blown-Out Forms

Another problem that arose during some of the earlier UHPC placements was that, after stripping the top forms, the UHPC pours were not completely filled. Recommended practice by FHWA and Lafarge is to install chimneys at key locations and to monitor and keep the chimneys at least partially full of UHPC during the hours after the pour. The chimney is just a box or bucket sitting on the deck above a UHPC pour location with a hole in the bottom to provide head pressure for the fluid UHPC to ensure that the pours will be completely full. However, chimneys will not be enough to keep the pours full if there are form leaks or blowouts. Simply making formwork stronger becomes impractical if the pressure demand exceeds the capacity of typical formwork, as was the case for some of the early UHPC pours.

The contractor chose to pour the deck panel connections simultaneously with the haunches and shear connections, leaving them all interconnected. In addition, in attempts to reduce the number of bulkheads, the contractor initially poured the UHPC continuously over many panels, leading to very high head pressures on the downslope formwork. This, in turn, led to a series of leaks and form blowouts (Figure 7).

The solution was to limit the length of UHPC pours on the Pulaski Skyway by limiting the number of panels whose connections and haunches were poured simultaneously, in particular in the areas with higher profile grades. This was accomplished by placing plywood bulkheads at the intersection of the haunches and the transverse panel connections at the limits of the pour. A rule of thumb employed was to limit the number of panels whose haunches and connections were poured simultaneously to three, which spans a bridge length of approximately 75 feet. The repair to underfilled pours will be discussed in the section on repair of deficient UHPC pours.

Figure 7. Underfilled UHPC Panel Connection and Shear Pocket Due to Leaking Forms

Problems Caused by Not Waterproofing Formwork

UHPC has a very low water-to-cementitious materials ratio, typically on the order of 0.25 or less. As a result, the fresh UHPC must be protected to prevent moisture from being drawn out, either by dry adjoining precast concrete or by plywood forms. For this reason, adjoining precast concrete surfaces should be in a saturated-surface-dry condition just prior to pouring UHPC, and formwork should not be able to absorb water. Formwork can be made of plastic or other non-absorbent materials, or more commonly is made of plywood with non-absorbent resin coatings.

On one occasion, the contractor used bare plywood for top forms of the deck panel connections. It resulted in cracking of the UHPC that was still present even after the overfilled UHPC was ground away. The cracking was determined to be mostly superficial. Because the PPC overlay placed on top of the deck is applied with a high molecular weight methacrylate primer, the NJDOT did not require any remedial action. Otherwise, it would be prudent to seal the cracked UHPC with a methacrylate sealer as a minimum course of action.

Problems Caused by Waterproofing Detaching from Formwork

For some of the deck panel connection top forms, the contractor attached polyethylene sheeting to the underside of plywood top forms as a means of waterproofing the forms. Unfortunately, in one series of panel connection pours the fresh UHPC managed to flow in between the polyethylene sheeting and the

plywood, and the weight of the UHPC and the force of the flow pulled the sheeting downward and into the UHPC connection by as much as several inches. As a result, the polyethylene sheeting acted as a bond breaker within the mass of the UHPC connection, while the top of the UHPC was negatively affected by moisture loss due to contact with the uncoated plywood form which led to shrinkage cracking of the UHPC.

The long-term solution for this problem was to exercise greater care in attaching the polyethylene sheeting to the formwork and to use prefabricated forms with a non-absorbent coating, with the latter being the preferred method. The affected UHPC pours had to have the UHPC completely removed and replaced where the sheeting was more than 0.5-inch (13-mm) deep. The details of how this was performed are discussed in the section on repair of deficient UHPC pours.

Problems Caused by Low Ambient Temperature

Because of the project schedule and the very large number of UHPC connections, UHPC pours continued year-round for several years, including during the winter. Fresh UHPC needs to be kept at a minimum temperature of 50° F (10° C) in order to achieve its expected qualities and material properties. If the temperature of the fresh UHPC drops below 50° F (10° C), the rate of curing slows down significantly, and it takes much longer to achieve initial material setup. The steel fibers that are suspended in the fluid UHPC, therefore, have much more time to drift downward due to gravity, and the fibers can segregate at the bottom of the UHPC. The result is a lack of fiber in the top half of the UHPC which can lead to cracking and insufficient capacity to development rebar and resist tension forces.

When pouring UHPC in temperatures that are below 50° F (10° C), or that are expected to drop below that temperature over the three days following the pour, measures must be taken to ensure that the UHPC and the surrounding structure are kept at a temperature of 50° F (10° C) or higher. This can be accomplished by a combination of heaters and insulating blankets. However, for various reasons, the required minimum temperature was not maintained on a handful of UHPC pours on the Pulaski Skyway. In all cases, subsequent cylinder testing showed that the UHPC still met the minimum required 28-day compressive strength.

Questions remained, however, as to whether the field-placed UHPC had experienced any fiber segregation. The NJDOT required the contractor to take 2-inch (50-cm) diameter cores of the field-placed UHPC to check for fiber segregation. While some of the cores exhibited signs of minor segregation, Lafarge certified to the NJDOT that the UHPC met the design criteria. As a result, no corrective action was taken.

Problems Caused by Early-Age Loading

On multiple different occasions, the contractor loaded previously poured UHPC connections before the UHPC had achieved the 14 ksi (96.5 MPa) minimum strength required for loading. The contractor drove motorized buggies across precast deck panels and over their recently poured UHPC connections, by either driving over the top forms or by prematurely removing the top forms. In at least two cases, the UHPC connecting the precast panels had only been poured the previous day. The gross weight of each motorized buggy was similar to the average weight of an automobile but with a much smaller width and wheelbase. At least one of those locations was also a cold weather pour with insulating blankets on top that were removed over a width of about 8 feet (2.5 meters) (Figure 8). In the case of the cold weather pour, the concerns were not just about early age loading but also about the minimum temperature not being maintained on the previously poured UHPC in the area where the insulating blankets were removed.

Figure 8. Insulating Blankets Removed and UHPC Connections Loaded Prematurely

One of the first steps that the NJDOT required was for the contractor to take a 2-inch (50-mm) diameter core from each prematurely loaded connection to check for indications of fiber segregation. A number of those cores showed indications of fiber segregation and some also had cracks. These results led to a more rigorous sampling and testing program. NJDOT, in coordination with the design engineers, WSP USA, implemented a program of testing twenty-four 2-inch (50-mm) diameter cores taken from previously cast UHPC deck panel connections that were considered acceptable in order to establish baseline properties. A diameter of 2 inches (50 mm) was used in order to reduce the likelihood of hitting reinforcing steel during the coring operation, and therefore to minimize the damage to the in-place UHPC. The main goals of the testing program were to determine an acceptable tensile capacity of the UHPC and, relatedly, to determine acceptable fiber distribution.

Due to the small sizes of the samples, it was not practical to perform direct-tension tests on the cores. Therefore, the cores were tested using ASTM C496, *Standard Test Method for Splitting Tensile Strength of Cylindrical Concrete Specimens*. Several prior studies, including one by Dr. Benjamin Graybeal indicated that there was a direct correlation between the splitting tensile strength of UHPC cylinders and the direct tension capacity.

Each core was divided in half, so that each half core could be tested separately as a means to identify any performance reductions between the two halves due to possible fiber segregation where the fibers would settle towards the bottom. Several additional control cores were created from two newly cast UHPC samples, one containing 2% steel fiber as per the project specifications and one without any steel fibers to serve as a lower bound sample. The control samples were thermally treated to accelerate their curing to approximate the age of the cast in-place UHPC baseline samples. Prior to execution of the testing, a tensile strength of 725 psi (5 MPa) was established as a preliminary acceptance threshold, based on the published tensile design strength of Ductal, Lafarge's UHPC being used on the project.

Each half-core and control sample was measured, weighed, and then subjected to a splitting tensile strength test. The measured splitting tensile strength of all of the half-cores and control samples greatly exceeded 725 psi (5 MPa), being nearly 3 times to nearly 10 times greater, including cores with cracks in them and including the control sample with no steel fiber. Furthermore, almost all test results were within two standard deviations of the mean with no extreme outliers (Figure 9).

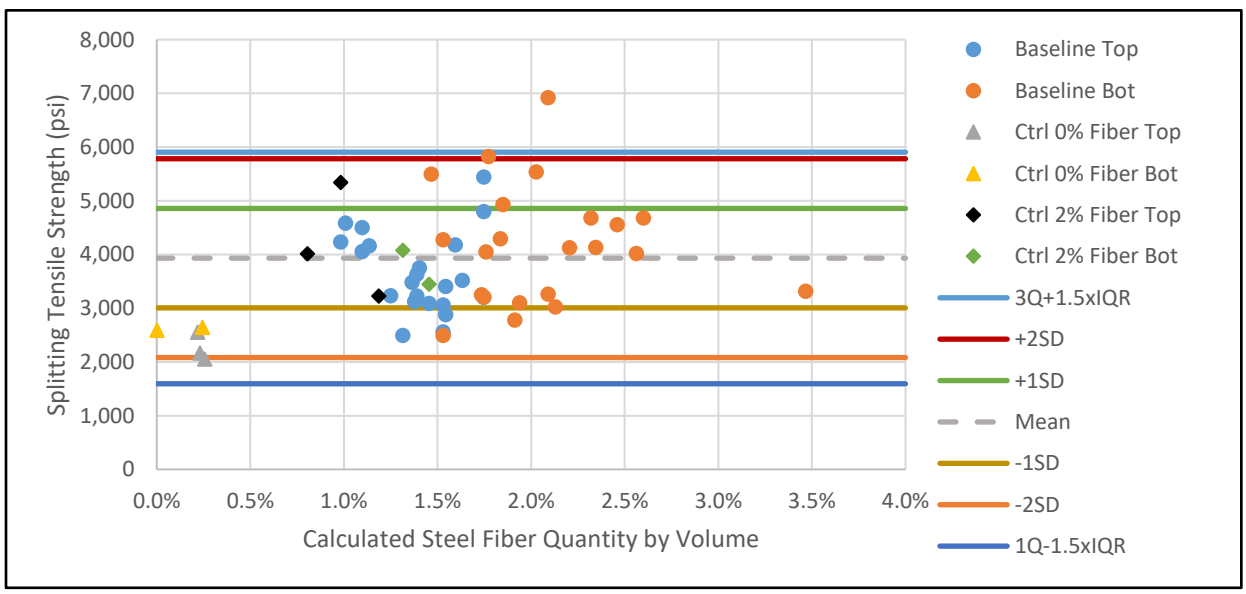

Figure 9. Calculated Steel Fiber Quantity by Volume vs. Splitting Tensile Strength Test Results of Baseline Samples

It was clear that the data could not be correlated to the actual tensile capacity of the UHPC. As Dr. Graybeal states in his paper, "Practical Means for Determination of the Tensile Behavior of Ultra-High Performance Concrete," the ASTM C496 test, unmodified, overestimates the capacity of fiber reinforced concretes, which include UHPC, since the concretes do not fail immediately after cracking and they exhibit significant reserve capacity. To correlate with direct tension capacity, Dr. Graybeal proposes several modifications to the ASTM C496 methodology, the most significant one being the implementation of a crack detection method to detect when the first crack appears. Proposed crack detection methods include LVDTs, combined video and audio recordings, and ultrasonic testing during the split cylinder test. Unfortunately, the testing lab relied only on visual crack identification, and thus likely missed the actual first crack and greatly overestimated the tensile capacity. Furthermore, the ASTM C496 methodology involves testing 6-inch (152-mm) diameter cylinders which raises questions about geometric compatibility.

Despite the inability to correlate the test data to direct tension capacity, the baseline samples could still be compared to the control samples with 2% steel fiber. However, even this left some doubt about the results, as three of the 0% fiber control samples had higher test results than three of the half-cores including a bottom half-core sample.

The density of the baseline samples was also calculated as an attempt to quantify fiber content and to identify changes in fiber content due to segregation. This, too, was determined to be an unreliable indicator, as the calculation for steel fiber quantity is highly dependent on the assumed density of the UHPC without steel fiber.

After all of this testing and analysis of baseline samples, it was determined that there were too many uncontrollable or unknown variables and it was impossible to determine actual fiber content or to establish actual tensile capacity of 2-inch (50-mm) diameter UHPC cores. As a result, an acceptance criterion was agreed upon by the NJDOT based on the splitting tensile strength only, using 1.71 standard deviations below the mean as the minimum based on a t-distribution analysis of the 24 baseline samples.

Following the establishment of this criterion, core samples were taken from the UHPC connections that had been loaded prematurely, and they were subjected to the same splitting tensile strength testing as the baseline cores. All of the samples from the prematurely loaded areas had a splitting tensile strength result above the established minimum value with only one exception that was only slightly below the limit. Furthermore, the distribution of the splitting tensile strength values was very similar to that of the baseline samples. While a small number of samples had cracks and apparent fiber segregation, their test results were consistent with the other samples with no reduction in capacity. Consequently, none of the UHPC pours in question were removed.

One lesson learned from this experience is that measuring the tensile capacity and fiber content of UHPC cores from splitting tensile strength tests is very difficult. In order to accurately measure the tensile capacity of the UHPC cores, additional work would have been required to refine the methodology to strictly follow Dr. Ben Graybeal's recommended modifications for detecting the first crack. Furthermore, based on the existing available information, it would have been necessary to take 6-inch (152-mm) diameter cores which would have caused more damage to the bridge deck and would have required additional repair work. Rather than spending additional time and effort to refine the methodology to establish a better scientific means to evaluate the cores, the owner ultimately decided to rely on the testing results that indicated there was no significant difference in the tensile capacity of the prematurely loaded UHPC pours versus previous UHPC pours that were accepted.

REPAIR OF DEFICIENT UHPC POURS

After the initial problems with form leaks that were not detected until after the UHPC had cured, the NJDOT undertook a testing program to see if topping off the low UHPC pours with fresh UHPC would be an acceptable solution. The owner wanted to make sure that the repaired UHPC deck panel connections and shear pockets had the same capacity as monolithic UHPC, including tensile capacity. The tests were carried out using the steel framing from the full-scale deck panel and UHPC connection mockup that had been required prior to initial UHPC placement activities earlier in the project (Figure 10).

Several repair methods were considered, including simply placing a bonding agent between the previously cast UHPC and the freshly placed UHPC. The method that was finally tested on the mockup involved coring 1 7/8-inch (48-mm) diameter holes into the previously cast UHPC panel connections and 1-inch (25-mm) diameter holes into the previously cast shear pockets as a way to increase the contact surface area between the two UHPC pours, with an epoxy bonding agent applied to the exposed surface of the hardened UHPC.

Figure 10. Pull-Off Test Setup

A series of pull-off tests were required in accordance with ASTM C1583, *Standard Test Method for Tensile Strength of Concrete Surfaces and the Bond Strength or Tensile Strength of Concrete Repair and Overlay Materials by Direct Tension (Pull-off Method)*. The NJDOT required a minimum pull-off capacity of 725 psi (5 MPa), based on the direct tension design strength of the UHPC published in the product data sheet, which also includes a mean direct tension strength of 1,160 psi (8 MPa). Unfortunately, none of the pull-off tests met the 725 psi (5 MPa) threshold. As a result, for the entire project, the NJDOT disallowed topping off or otherwise repairing any cured UHPC pours that were cast low or that had any voids or other deficiencies, and required that they be completely removed and recast, with a few minor exceptions.

Despite the fact that some of the cured UHPC that needed to be removed was many months old by the time removal efforts began, and thus would have reached the 28-day compressive strength of 22,000 psi (150 MPa) or higher, it was successfully removed with small jackhammers (typically 20 lb [9 kg] maximum size to minimize collateral damage), albeit at a slower pace than what would be expected for removing conventional concrete (Figure 11).

Figure 11. Removing Cured UHPC from Underfilled Shear Pockets

CONCLUSION

The new Pulaski Skyway deck was completed in 2018, with final punch list and project closeout activities extending into 2019. While there were some problems with UHPC placement, the vast majority of the more than 5,000 cubic yards (3,800 cubic meters) of UHPC were placed without any problems. Where problems did arise, the combined efforts of the owner, the designer, the contractor, and the UHPC supplier resulted in solutions that are anticipated to maintain the long service life of UHPC connections.

It is hoped that other designers, owners, construction engineers, and contractors can benefit from the experience gained on the Pulaski Skyway. This information can help others anticipate and therefore avoid potential problems and provides some guidance on solutions that were employed should similar problems arise on other projects.

REFERENCES

ASTM Standard C496, 2017, “Standard Test Method for Splitting Tensile Strength of Cylindrical Concrete Specimens,” ASTM International, West Conshohocken, PA, 2017, DOI: 10.1520/C0496-17, www.astm.org.

ASTM Standard C1437, 2015, “Standard Test Method for Flow of Hydraulic Cement Mortar,” ASTM International, West Conshohocken, PA, 2015, DOI: 10.1520/C1437-15, www.astm.org.

ASTM Standard C1583, 2013, “Standard Test Method for Tensile Strength of Concrete Surfaces and the Bond Strength of Tensile Strength of Concrete Repair and Overlay Materials by Direct Tension (Pull-off Method),” ASTM International, West Conshohocken, PA, 2013, DOI: 10.1520/C1583-13, www.astm.org.

ASTM Standard C1856, 2017, “Standard Practice for Fabricating and Testing Specimens of Ultra-High Performance Concrete,” ASTM International, West Conshohocken, PA, 2017, DOI: 10.1520/C1856-17, www.astm.org.

Graybeal, B., "Design and Construction of Field-Cast UHPC Connections," FHWA, U.S. Department of Transportation, Report No. FHWA-HRT-14-084, Available at http://www.fhwa.dot.gov/publications/research/infrastructure/structures/14084/ [Cited Nov. 1, 2019].

Graybeal, B., "Practical Means for Determination of the Tensile Behavior of Ultra-High Performance Concrete," Journal of ASTM International, Vol. 3, No. 8, September, 2006, DOI: 10.1520/JAI100387, www.astm.org.

McDonagh, M.D. and Foden, A.J., “Benefits of Ultra-High Performance Concrete for the Rehabilitation of the Pulaski Skyway,” Proceedings of the First International Interactive Symposium on UHPC, Des Moines, IA, July 18-20, 2016, DOI: 10.21838/uhpc.2016.91.

USE OF POCKET GUIDES AND SMART PHONE APPLICATIONS IN BRIDGE PRESERVATION CONSTRUCTION

Eric Thorkildsen, P.E., GPI, (518) 209-4823, ethorkildsen@gpinet.com

INTRODUCTION

In this world of fast moving and accelerated construction, quality can suffer if those delegated with bridge construction inspection are not properly trained. Sometimes this training needs to happen quickly, possibly the same day construction takes place. Greenman-Pedersen, Inc. (GPI) was contracted by the Federal Highway Administration (FHWA) to develop a series of Pocket Guides on construction specific to bridge preservation. Guides developed to date include installation of Thin Polymer Overlays on bridge decks, removal and replacement of bridge coatings, installation of bridge expansion joints and bridge cleaning. The guides were developed as part of the FHWA Bridge Preservation Expert Task Group (BPETG) that features members from state department of transportation's, academia, industry and private consultants. The target audience for the pocket guides are construction inspectors, industry representatives, and resident engineers. A typical scenario would be where an inexperience construction inspector is assigned a duty such as oversight of a thin overlay on a deck without prior expertise in that area. The pocket guide offers quick checklists and the "what is important" aspects of the installation. To further help the process, the guides were developed into a smart phone application whereby the inspector can access the checklists electronically, select those items completely by the contractor and email the report to their supervisory. This presentation/paper will illustrate the guides and how they can be effective tools in the field.

The history for the pocket guides can be traced back to the strategic plan for the BPETG. Funded by the FHWA, a major objective of the group is to inform bridge owners of best practices for preservation activities. One impediment to extending the service life of bridges through preventive maintenance activities is proper training of field and oversight personnel involved with the application, installation or construction of a preservation task. One example is the use of thin polymer overlays to extend the service life of a bridge deck. It is generally agreed that such an application can have significant effect on the life of a bridge deck if properly applied. Application can be performed by either in-house maintenance forces or a contractor. It is customary to have a service representative come up and provide on-the-job training to a crew, but there is not constant reinforcement and sometimes the “why” things are done are not properly reinforced. Bottom line is that training is needed in all shapes, forms and sizes in order to maintain the quality of the preservation activity.

AVAILABLE TRAINING

Training in Bridge Preservation construction activities does exist but is sometimes not well known or advertised. The National Highway Institute (NHI), the training arm of the FHWA, developed a bridge maintenance course 15 years ago and updated it in 2014 to include the most common bridge preservation activities. The update also included adult learning techniques instead of straight lecture which was a great improvement. As an example, participants as part of the four-day course develop a case study whereby a bridge must be investigated for the best repairs, rehabilitation and preservation strategies. This course is instructor led and is hosted by a bridge agency/owner with participants numbering from 20 to 30 in the classroom.

Many times, it is difficult for participants to attend an instructor led course, so web-based training has become popular. NHI has developed several web-based (WBT) courses that have direct application to bridge preservation. There is a 3-part course specifically focused on bridge preservation, specialty WBTs on preservation of movable bridges, masonry bridges, timber bridges and specialty repairs like the use of FRP in concrete bridge rehabilitation. Recently an AASHTO training group TC3 took Pocket Guides

developed by the BPETG and transformed them into WBTs. The 1-hour courses walk participants through the guides and provides more visuals like photos and complete narration.

WHY POCKET GUIDES

With all this training available why then pocket guides? The development thinking was that sometimes you might have to become knowledgeable in a short amount of time regarding a preservation subject or need a quick review. A potential scenario is an inexperienced construction inspector who is requested that day to inspect the installation of a bridge preservation action. The “pocket” refers to the size of the guide that can be printed out and fit into the pocket of the inspector. The guides were deliberately kept short and focused on best practices and avoiding construction mistakes that can doom the project from the start. The average length of the guides are 20 pages with multiple checklists with the hopes that within an hour out in the field the inspector can gain some limited but valuable knowledge. Each pocket guide contains links to other references so if needed more detailed information can be obtained.

Three pocket guides have currently been developed and posted on the AASHTO TSP2 website. https://www.tsp2.org/

1. Thin-Polymer Bridge Deck Overlay Systems
2. Bridge Cleaning
3. Removal and Replacement of Bridge Coatings

Three additional pocket guides are currently under development

1. Bridge Deck Patching
2. Bridge Spot and Zone Painting
3. Bridge Concrete Substructure Repair

The initial pocket guide produced was one for application of thin-polymer bridge deck overlay systems. These systems are currently being used by many bridge agencies with good long-term results. However, the application of the overlay needs to have proper preparation. If the deck is not clean and dry the application will not bond with the existing concrete. The deck needs to be cleaned by sand or shot blasting to prepare the surface, but care must be taken not to disturb that initial layer of paste on the deck surface too much. Another critical aspect of the application is to have the deck in a state of saturated surface dry condition. Finally, use of too much or too little epoxy and/or aggregate can affect bond and slip resistance.

The bridge cleaning pocket guide provides practical tips on application of water or cleaning without the use of water. Although not covered in depth environmental controls are listed with links to other documentation. The pocket guide covering removal and replacement of bridge coatings was initially a comprehensive guide covering all aspects of bridge maintenance painting but was determined to be too long for the stated intention of a quick read. Two separate but complementary documents were therefore prepared. Bridge painting removal and replacement can be one of the costliest preservation measures applied to a bridge. As an example of the limited scope of the guides selection of paint type was not covered. It is assumed that decisions like that would be made long before the guide would be needed.

SMART PHONE APPLICATIONS

So why develop smart phone applications from the pocket guides? The answer lies with the BPETG and leader of the pocket guide group that theorized “Wouldn’t it be cool if the guides could be transformed into checklists that could be completed in the field and a report on the quality could be emailed directly from the field”. That idea took hold amongst the experts and development began thereafter. Since most inspectors use their phone for other documentation such as photos it made since to be able to use one tool. The entire PDF of the Pocket Guides are contained in the app, but then the app transforms the guide into a series of subjects separated by work tasks. Users of the app can edit the checklists and add

notes to customize the tool for their specific project. At the user's discretion they can select the "email report" tab and send the report like a normally initiated new email.

SUMMARY

The BPETG Pocket Guides and Smart Phone Applications offer a valuable tool to those out in the field that are involved with the construction or installation of bridge preservation actions. If you have questions or would like more information, please contact Mr. Thorkildsen.

TRAINING CONSTRUCTION INSPECTORS IN ACCELERATED BRIDGE CONSTRUCTION TECHNIQUES

Willy Grimmke, P.E., GPI, (518) 898-9518, wgrimmke@gpinet.com
David Hoyne, P.E., GPI, (802) 917-4310, dhoyne@gpinet.com

INTRODUCTION

In today's rapidly changing world, with innovative techniques to construct bridges and a demand for construction inspectors with bridge experience, the training of inspectors has lagged the innovations. Perhaps the most significant example of this is with Accelerated Bridge Construction.

The training arm of the Federal Highway Administration (FHWA) is the National Highway Institute (NHI), who has historically provided state of the art instructor led training for those new to bridge construction inspection with the NHI Course 130088 Bridge Construction Inspection. The course was popular; however, the material was over a decade old and did not address accelerated bridge construction techniques. The course has been removed from the current course offerings and is undergoing a significant overhaul.

Recently, the FHWA awarded Greenman-Pedersen, Inc. (GPI) a contract to update the existing NHI course. The new course will have both web-based and instructor led components that will not only cover conventional bridge construction but will also encompass accelerated bridge construction techniques such as prefabricated bridge elements and systems, slide in construction and self-propelled modular transport (SPMT's). The course will teach best practices for inspection of ultra-high-performance concrete and grouting of post-tensioned bridge elements. In addition, lessons will include scheduling, decision making, and documentation practices geared towards accelerated bridge construction.

This presentation provides an overview of the revised course, including the technical concepts covered by the lessons, the web-based and instructor led delivery methods and the expected learning outcomes as they relate to accelerated bridge construction. The International Accelerated Bridge Construction Conference is the ideal venue to share this new course offering with ABC stakeholders to demonstrate the value of the course and to generate enthusiasm for this important training opportunity.

SUBJECT MATTER EXPERTS

Mr. Willy Grimmke and Mr. David Hoyne are the subject matter experts tasked with developing the content for the instructor led and web-based training courses respectively. Their work includes the development of the exercises, knowledge checks, end of course assessment and presentation materials to ensure the content is accurate, engaging and relevant to the challenge's inspectors face with bridge construction.

Mr. Grimmke has 30+ years of experience serving in various capacities in the engineering and construction industry including 13 years as the Washington County New York Public Works Superintendent. He is currently an Assistant Vice President at GPI where, he is responsible for supervising construction inspection staff, serving as team leader for underwater inspections, and teaching bridge construction, maintenance, and inspection courses for the National Highway Institute.

Mr. Hoyne is the former Director of Construction and Materials for the Vermont Agency of Transportation where he managed the statewide capital improvement construction program and the materials testing laboratory. Mr. Hoyne retired from VTrans and now serves as a Senior Construction Engineer at GPI where he provides expert advice on developing and managing construction contracts, workforce development programs and teaches bridge inspection and bridge rehabilitation courses for NHI.

THE COURSE

The course was redesigned to provide those involved in bridge construction inspection with the basic knowledge of bridge construction and the overall process of bridge construction inspection to assure conformance to contract requirements. In addition, the course is aimed at developing the knowledge and skills necessary for inspectors to properly inspect, record and provide documentation at each stage of bridge construction.

The target audience includes construction supervisors, transportation department field inspectors, field engineers, resident engineers, structural engineers, materials engineers, and other technical personnel involved in bridge construction inspection. The course is developed for participants with a non-engineering background and limited construction knowledge and begins with six hours of self-guided web-based training as a prerequisite to the instructor led class.

The course focuses on what the inspector needs to look at, why the work needs to be inspected, and what the inspector does as part of their inspection. The course is designed to be very much inspector centric and includes content focused on Accelerated Bridge Construction (ABC).

ACCELERATED BRIDGE CONSTRUCTION

The course material for ABC covers the technical knowledge the inspector must have to properly inspect operations involving post tensioning, prefabricated bridge elements, bridge slides, self-propelled modular transport, and high-performance concrete. The course also explores how ABC projects require the inspection team to adjust their approach to the project schedule, the decision-making process and the documentation of accelerated bridge construction projects.

The following table reflects the technical material presented in the instructor led course:

Post-Tensioning	Prefabricated Bridge Elements	Bridge Slides	Self-Propelled Modular Transport	High-Performance Concrete
Ensure only the correct materials are incorporated in the work	Confirm the elements were fabricated dimensionally correct	Understand the jacking plan	Understand the moving plan	Monitor the batch operation
Monitor the forces throughout the jacking operation	Check for in-transit damage to the elements	Monitor structure during the slide	Path is structurally sound	Understand delivery requirements
Monitor the grouting operation	Confirm the elements can be incorporated in the work	Monitor jacking forces throughout the slide	Path is clear of obstructions	Prepare for on-site testing
Acquire representative samples for testing	Understand the erection plan, pick points, lifting lugs	Continuously check tolerances	Monitor support points for movement or strain	Monitor time constraints

The inspection team assigned to ABC projects is faced with unique challenges in performing inspection activities and managing the project consistent with the goals of ABC. Recognizing these challenges and advance preparation will help to minimize unnecessary delays. For example, the inspector will need to work with the contractor to become intimately familiar with the detailed progress schedule and to identify gaps in their work, sequencing problems, hold points and inspection requirements. ABC projects demand this collaboration upfront so the inspection requirements are built into the process and the entire team is on the same page with how the work will be executed once it begins. Setting and managing clear expectations is a best practice

In construction we plan for obstacles because we know that at some point during the work, an issue will arise that requires a decision based on thoughtful engineering judgement. We don't know in advance what the issue is, but we are confident there will be a challenge that needs to be overcome. And, these issues have a way of presenting themselves on Sunday morning at 3:00 AM!

If an owner requires a contractor to work 24/7 on accelerated construction to deliver a project, then the owner must be prepared to do the same. Owners must develop a non-business hour chain of command so all matters may be addressed in an expedited fashion. There is no limit to the range of issues that can present themselves including alterations to foundations, differing site conditions, traffic related problems, engineering decisions, and anything related to contract time and money. The inspection team needs to know who to contact, and the chain of command is ready to respond during the critical periods of construction. Decisions need to be made quickly to keep the project moving forward.

Documentation has evolved in the last twenty years and is now a significant component of the work. The inspection team is expected to provide comprehensive documentation of all work which can be daunting during accelerated construction. The work is fast pace, involves multiple crews, multiple operations, subcontractors and suppliers. There is only one opportunity to capture the work.

The office engineer position should be considered essential personnel during the portions of accelerated construction. This person can keep the inspector's work products organized, manage last minute revisions to submittals and capture the documentation for all deliveries to the site.

More importantly, when a problem arises, the office engineer can keep the process organized and moving forward by ensuring the decision makers have immediate access to the information without distracting the inspector. Even though a significant problem is unfolding, the inspector's focus should remain with the work, ensuring it meets the contract requirements. Having the support of the office engineer to help facilitate the communication and documentation keeps the problem from becoming an additional burden for the inspector. This approach mitigates the risk of the inspector performing poorly at both the inspection and seeking resolution to problems. The office engineer can play an important role for the project, especially during the accelerated stages of work.

SUMMARY

The NHI web-based and instructor led training courses offer valuable insights for bridge construction and accelerated bridge construction. The new courses will be a tremendous improvement and provide owners a much-needed resource for bridge construction inspection training.

FOLLOW UP

At the time of presentation, these courses are in the final development and review stages. The pilot course is scheduled for April 2020 with the full release to follow. If you have questions or would like more information, please contact Mr. Grimmke or Mr. Hoyne.

Eliminating the Need for Formwork using UHPC Shells

Nerma Caluk, Florida International University (786) 208-1101, ncalu001@fiu.edu
Islam Mantawy, Ph.D., Florida International University, (775) 537-9019, imantawy@fiu.edu
Atorod Azizinamini, Ph.D., P.E., Florida International University, (402)770-6210, aazizina@fiu.edu

INTRODUCTION

Ultra-High Performance Concrete (UHPC), durable material used in constructing unique and innovative structural elements, is proven to be a perfect fit for accelerated bridge construction (ABC). This research utilizes UHPC to construct prefabricated shells that act as stay-in-place forms for bridge columns to eliminate traditional formwork and scaffolding. Incorporating these structural elements improves the structural performance of bridge columns; reduces the on-site construction time; and protects normal concrete and column reinforcement in aggressive environments such as coastal areas where steel corrosion and water intrusion are service life issues. After erecting and splicing column reinforcement onsite, prefabricated UHPC shell is placed around the column reinforcement which is followed by casting of column-to-footing connection with UHPC. This connection is designed to relocate the plastic hinge away from the protected elements (footing and cap beams). Once the UHPC hardens, the normal strength concrete is cast inside the shell, creating a permanent concrete-filled UHPC shell. This publication discusses briefly the development of this new concept along with experimental results for one column specimen which was constructed using an unreinforced UHPC shell. Another specimen is being constructed to enhance the bond between UHPC and concrete by sharing the longitudinal reinforcement between them.

DESING AND CONSTRUCTION

Design of the specimen

The main goal of incorporating stay-in-place prefabricated UHPC shells for bridge columns is to eliminate the use of formwork and scaffolding which enhances safety and mobility in addition to enhancing the column performance and serviceability. In this research, a column specimen was designed, constructed and tested at Florida International University. The column specimen consists of an unreinforced UHPC shell where the conventional steel cage is located inside shell cavity and is filled with normal strength concrete. The connection between the footing and the column was designed as a "step" made of UHPC, where the splice region is located. Before testing the specimen, moment-curvature analyses were conducted for three different sections (footing, UHPC step, and column sections). These analyses were used to assure that no damage should occur in the footing and that the plastic hinge is shifted away from the footing and UHPC step (1). **Figure 1** shows specimen details.

Construction of the specimen

The construction of the specimen started by placing the footing reinforcement inside traditional formwork, followed by casting of normal strength concrete. To shape the UHPC shell, a sonotube was used as the outer perimeter and Styrofoam was used to shape the inner diameter.

As mentioned before, no reinforcement was embedded in the shell element. However, the steel cage consisting of longitudinal reinforcement and transverse reinforcement (spiral) was placed inside the cavity in the UHPC shell. Due to height limitations in the laboratory, the steel cage had to be placed in the UHPC shell before placing them together on top of the footing. After the shell and the cage were spliced with the extended dowel bars from the footing, another sonotube was used to shape the UHPC step connection. Once the UHPC step has hardened, the column concrete was cast together with the loading cap. **Figure 2** shows the UHPC shell and the UHPC step connection.

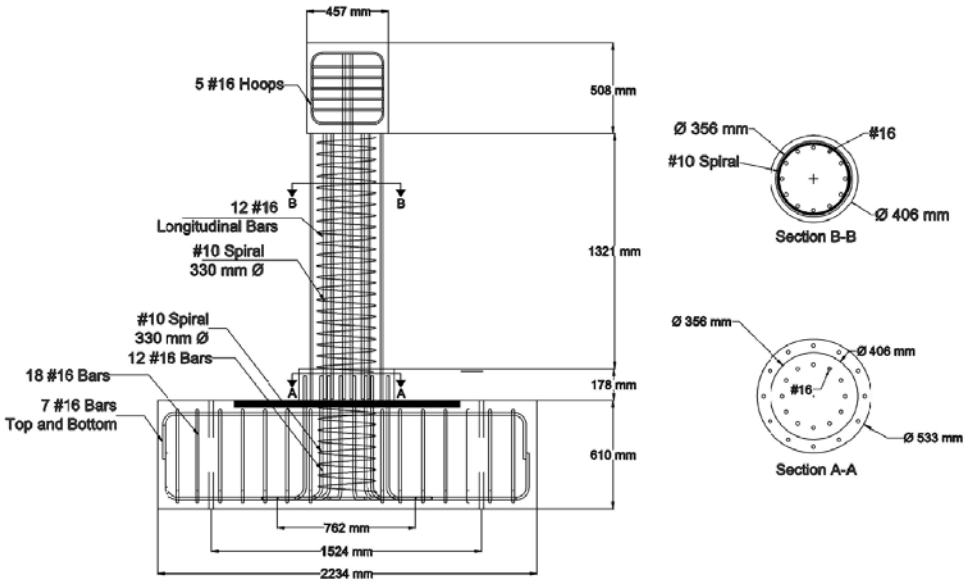

Figure 1. Detailing of the column.

Figure 2. Bridge column made of UHPC shell: Prefabricated UHPC shell (left), UHPC step connection between the column and the footing.

EXPERIMENTAL RESULTS

The column specimen was tested under a constant axial load of 534 kN and an incremental lateral load. The incremental lateral load was applied using displacement control as multiplications of yield displacement (Δ_y) of the specimen.

Twenty-six strain gauges, four displacement transducers, twelve strain potentiometers, and four cameras were instrumented to collect and measure specimen response in addition to tracing of the progression cracks and damage.

During the test, the UHPC shell cracked at the north side of the column at a drift ratio of 3%. However, even when the specimen has cracked in the plastic hinge zone, the column still had sufficient capacity and behaved similarly to a conventional reinforced column. The first bar raptured at a drift ratio of 7.5%. No damage was noticed at the UHPC step and footing, which proves that the design was appropriate for relocating the plastic hinge above the footing and UHPC step connection. **Figure 3** shows the hysteresis and envelope for the lateral force versus the lateral displacement for the tested specimen.

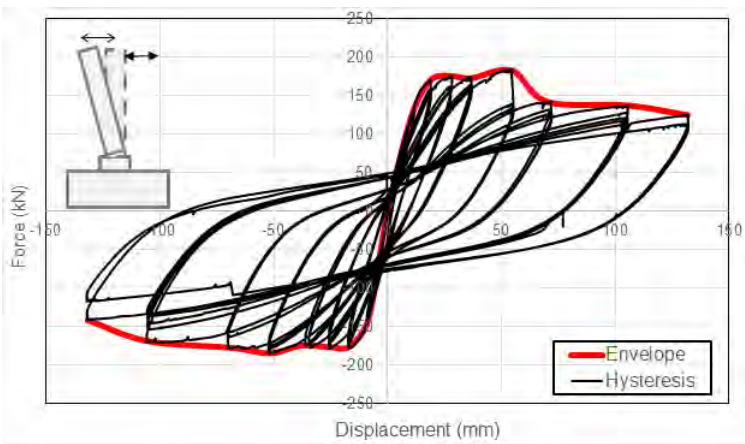

Figure 3. Force vs Displacement graph for the tested specimen

CONCLUSION

Based on the collected data, it was determined that the first bar fracture occurred at a drift of ratio 7.5% and that the designed UHPC step element is effective in shifting the plastic hinge away from the column-to-footing interface with no observed cracks. The first and main cracks were noticed at the north and south side of the column, at the connection between the column and the top of the UHPC step. Although the shell has cracked at the 3% drift ratio, the column still showed sufficient capacity and continued to act as a conventional reinforced concrete column until the first bar fracture. Prior to the testing, it was assumed that possible slippage might occur between the normal strength concrete and UHPC, however, after the test was conducted, no slippage between these two materials was noticed. Further investigation will be done to better understand the behavior of stay-in-place precast UHPC shell columns.

REFERENCES

1. Caluk, N.; Mantawy, I.; Azizinamini, A. Durable Bridge Columns using Stay-In-Place UHPC Shells for Accelerated Bridge Construction. *Infrastructures* **2019**, *4*, 25

RESILIENCY ENHANCEMENT OF AGING FRAME BRIDGE USING ACCELERATED BRIDGE CONSTRUCTION AS AN EFFECTIVE CLIMATE CHANGE ADAPTATION APPROACH

Husham Almansour, Ph.D., P.Eng., National Research Council Canada, (613)993-0129, Husham.Almansour@nrc-cnrc.gc.ca
Amina Mohammed, Ph.D., P.Eng., National Research Council Canada, (613)998-8169, Amina.Mohammed@nrc-cnrc.gc.ca
Zoubir Lounis, Ph.D., P.Eng., National Research Council Canada, (613)993-5412, Zoubir.Lounis@nrc-cnrc.gc.ca

ABSTRACT

Frame Bridge is a cost-effective alternative to the conventional arch bridge. A severe climate event could result in partial or full damage of the bridge. The recovery time is affected by the required performance of the bridge after an extreme event. This study suggested the accelerated bridge construction (ABC) approaches to be incorporated for the repair of partially damage bridges or the replacement of fully damaged or collapsed frame bridges as it provides the highest possible recovery time versus classical in-site construction approach.

INTRODUCTION

Frame bridge was a common bridge type in North America since its development by mid 1920s as a cost-effective alternative to the conventional arch bridge, which requires massive abutments and significant excavation/grading to accommodate its relatively high profile . The strength of a concrete rigid frame bridge originated from the rigid connection of the vertical abutment walls with the horizontal deck slab, resulting in a shallow mid-span section. This bridge type has the ability to redistribute the loads through the structure until it reached a balance when any one element of the bridge is overstressed. Its immense strength and rigidity provides an additional safety to the structural system. The result is a bridge that provides greater structural strength and redundancy than reinforced concrete slab-on-girder bridges. However, they have many disadvantages such as their construction complexity, high construction cost, and the difficulty in evaluating their structural performance when attacked by reinforcement corrosion or they have material deficiencies. Also, the structural continuity of the frame bridge may increase its sensitivity to vibration when severe damage is induced in the super- and/or the sub- structures. By the 1930s and 1940s, these structures became more popular for river crossings and grade separations. Short and medium span rigid frame concrete bridges are still widely used today for rail/roadway grade separations in urban areas with constrained right-of-way's or with minimal vertical and/or horizontal clearances.

It has been observed that the bridge performance is highly affected by the weather (Nemry and Demirel 2012[1]). In the design stage, assumptions about the range of temperatures, precipitation level, and wind speed are incorporated from historical climate data. Thus, bridges could be greatly impacted by the climate changes, mainly through increase of average temperatures, increases in different types of climate extremes such as hot/cold days, intense precipitation events and development of flash floods, and raising sea levels coupled with storm surges and hurricanes. The on-going effects of the climate changes are expected to have an impact on bridges through increasing rates of deterioration and the impact of extreme whether events (Wang et al. 2010[2]). Elements of aging bridge infrastructure are subjected to service loads and they are affected by progressive environmental loads that results in a successive reduction of their structural capacity. If an over loading situation is expected over the bridge lifetime (for example an ultimate load), then the collapse of a critical structural element is more probable. Saetta et al. 1999 [3] indicated that strength and ductility of aging RC structures are very important aspects of the structural behavior at ultimate load as they are highly related to their durability. The long term structural performance of bridge elements, their instantaneous load-bearing capacity, and their mode of failure are all dependent on the degradation of both, the concrete and reinforcing steel.

One of the expected changes is an increase in annual temperatures; also, changes are expected in the ranges of maximum and minimum temperatures. In the short-term, no major impact on the structural performance of the bridges is expected due to temperature changes. However, in the long-term, temperature changes will result in extreme stresses on the bridges due to the thermal expansions and contractions. On the other hand, with global increase of ambient temperature it is observed that bridge columns are more frequently affected by scour events as a result of early melting of snow and glaciers due to high winter temperatures will result in higher flow rates and more turbulent flows. This will require development of regional maximum/minimum temperatures as well as seasonal and even daily temperature variations. In this context, the overall bridge deformations due to significant changes in the thermal stresses are induced due to the variations either in the temperature gradient over the cross-section or high changes in the overall extension due to uniform temperature (ambient temperature). Such thermal loading influences the design of the bridge structural elements and joints. Failure to allow effects like repeated cycles of heating and cooling may magnify the distress in various parts of the bridge (Tong et al. 2000[4]). For instance; the elevated ambient temperature could severely damage the expansion joints and affects its functionality (Chang and Lee 2001[5]); also, the bridge structural load capacity could be seriously decreased due to the climatic driven accelerated deterioration (Bastidas-Arteaga et al. 2013[6]). Exposure of structural elements to extreme environmental conditions could initiate, accelerate, and propagate reinforcement corrosion. Hence, the structural performance and stability of these damaged bridges could severely deteriorate.

The climate change have been evidenced to accelerate the temperature fluctuation, freezing- thaw cycles, heat and/or humidity waves, which could highly accelerate the bridge deterioration and rehabilitation cycles. There is growing awareness worldwide that climate change will have significant impacts on the performance and resilience of transportation infrastructure, where bridges represent key links of the transportation networks. The escalation in frequency and intensity of extreme weather events are now obvious. It is widely believed that future climate changes may lead to very high climatic stress on infrastructure including loads, which in turn will lead to reduced safety, loss of serviceability, shortened service life, long service disruption, high rehabilitation and replacement costs, and significant negative socio-economic impacts. Therefore, evaluation of the instantaneous residual capacity and hence identifying the safety and serviceability of the bridge elements and structural system will enable an expedited assessment of the bridge state and resiliency after a major extreme climate event. The resiliency of bridges in terms of recovery after major climate events would also involve the required level of load capacity to enhance of bridge performance avoiding its collapse under similar extreme event. This would result in ensuring the life safety and minimizing the risk of traffic distribution due to lane or complete bridge closures, and/or bridge posting.

The objective of this paper is to investigate the effects of accelerated construction/rehabilitation approaches on the enhancement of an aged frame bridge resiliency. When the bridge is damaged or collapsed due to accelerated deterioration with the changing climate and/or extreme climate event, the resiliency enhancement should be provided in terms of minimum recovery time, higher target performance, using rapid strength and ductility enhancement approaches. The investigation is aimed at evaluating the resiliency of critical elements and the overall bridge system when subjected to changing climate and after an extreme climate event. Already developed 2D non-linear FEM model based on staged deterioration mechanisms is used to simulate the structural performance of aging frame concrete bridge.

SIMPLIFIED NONLINEAR ANALYSIS APPROACH FOR EVALUATING STRUCTURAL PERFORMANCE OF AGING FRAME BRIDGES

In order to simulate the failure mechanisms and structural performance of aged frame bridge element, it is essential to capture all possible stages of damages, and the resulting changes in structural performance in terms of ultimate capacity and serviceability at each damage state. The nonlinear finite element model, FEM, developed by Mohammed 2014[7] has been used here. The model integrates a nonlinear sectional analysis and an element structural analysis into one consistent modeling approach that is capable to evaluate the structural performance of damaged frame bridge. The nonlinear sectional analysis simulate the element sectional rigidities and the element structural analysis evaluates the structural performance and residual capacities of beam-columns. The bridge is considered to be subjected to service or extreme climatic and service loads combined with reinforcement corrosion.

MODELLING DIFFERENT SCENARIOS FOR AGING FRAME BRIDGES RESILIENCE

In a typical rigid frame bridge, the superstructure is rigidly connected to the substructure in a frame structural system. The integration between the superstructure and the substructure results in a continuity of the bridge stiffness and effective mass, which enables immense structural resistance to the static and dynamic loads applied on the bridge. Recently, more slender and elegant frame bridges are built using reinforced concrete deck slab compositely connected to either multiple steel frames, or multiple prestressed reinforced concrete frames- precast or cast in site. On the other hand, a resilient infrastructure system can be defined as a system that provides adequate performance against cumulative damage and extreme climatic stresses at an acceptable cost over its life cycle (Lounis and McAllister 2016 [8]). Resilience of civil infrastructure, such as bridges, is usually associated with the ability to deliver a certain service level even after the occurrence of an extreme event and to recover the desired functionality as fast as possible (Bocchini et al. 2015 [9]). Following excessive an extreme climate event, there is need to restore the structural performance of the frame bridge system, for instance, to a prevent level or even to a higher performance level.

Based on the type of frame bridge structure, different scenarios for the resiliency of the bridge system when subjected to extreme climate events are modeled in this study. Figure 1 shows a conceptual presentation of these scenarios. The blue line (sold and dotted) represent the performance line of the bridge structural system over its life time when no sudden-significant drop in performance has taken place. If a sudden drop of the bridge structural performance happens due to an extreme climate event (the vertical red sold line in Figure 1), then the bridge load capacity will drop suddenly. In this study, three scenarios for the bridge damage are assumed: (i) The bridge deck slab is partially or fully damaged and only one exterior frame of the frame bridge is partially damaged (this damage is assumed to reduce the bridge capacity by up to 50%); (ii) The bridge deck is largely damaged with the damage of more than half of the bridge frames which leave only one lane of the bridge functional (this damage is assumed to reduce the bridge capacity by up to 75%); and (iii) The bridge frames and deck slab are fully damaged and/or collapsed (this damage is assumed to reduce the bridge capacity by 100%).

The time required for each rehabilitation/ strengthening approach that enable the bridge to recover its full design capacity or a higher load capacity present the effectiveness of the bridge resiliency. The brown line in Figure 1 present the performance of the bridge over its service life after performance recovery to the design load capacity. The green line in Figure 1 present the performance of the bridge over its service life after performance recovery to the required load capacity to avoid losing the bridge with higher magnitude and frequency of the extreme climate events. The inclined brown arrows present the recovery of bridge performance to the original design level from the three assumed damage scenarios mentioned earlier. The slop of these arrows present the recovery speed or the effectiveness of the bridge resilience. The inclined green arrows (sold or dotted) present the recovery of bridge performance to the required performance level from the three assumed damage scenarios shown in Figure 1 by different colors. The sold green arrows having higher of sharper slops than the slopes of the dotted green lines, which means the sold green arrows present faster recovery time than the dotted green arrows. The accelerated bridge construction is apparently providing the highest possible recovery time (the sold green arrows) versus classical in-site construction approach (the dotted green lines).

Figure 2 shows the framework for resilient frame bridge. Two major accelerated bridge construction approaches are the base for reducing the bridge recovery time, which are Precast Prestressed Accelerated Manufacturing and Accelerated In-Site Construction. Both approaches, when integrated in a frame bridge recovery process, will lead to an enhanced resiliency in terms of: (i) load capacity enhancement; (ii) bridge ductility improvement; (iii) shorten recovery time where rapid structural strengthening techniques are to be used.

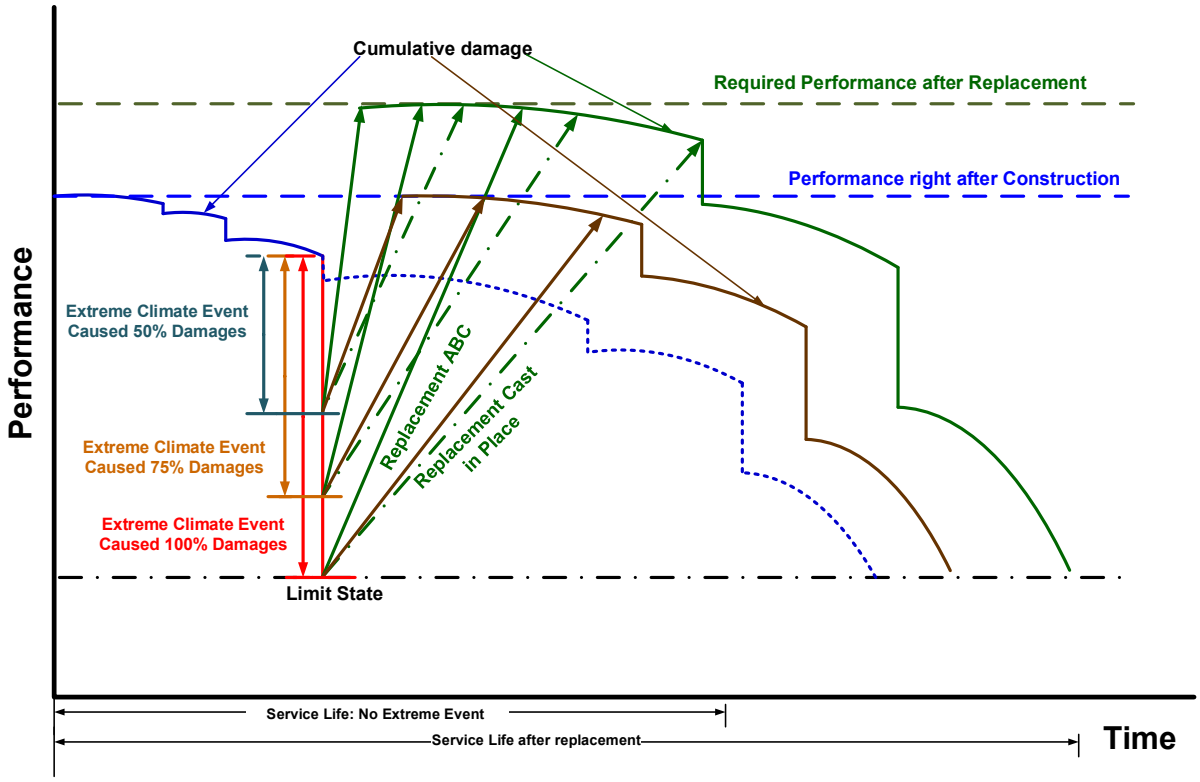

Figure 1: Schematic representation of resilient structural frame bridge system

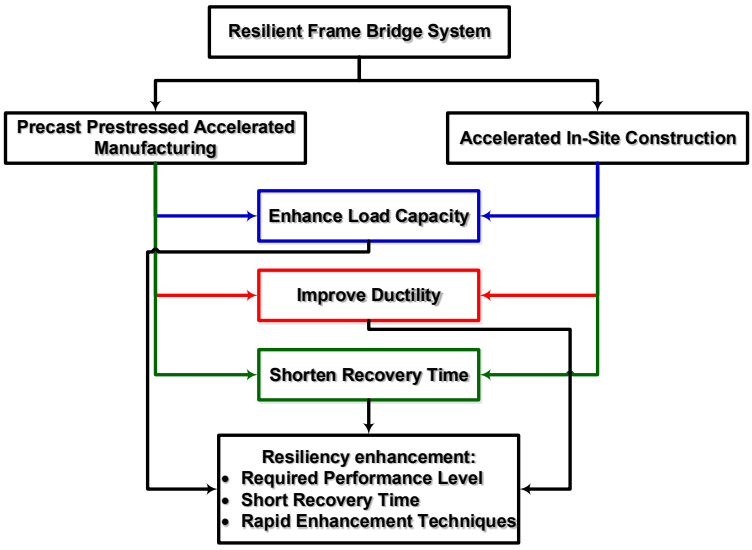

Figure 2: Framework for resilient Frame Bridges

CASE STUDY

In this case study, a precast-prestressed frame bridge is modelled as a structural system subjected to static and dynamic loads including moving trucks. The bridge consists of five precast-prestressed frames (see Figures 3 (a) and (b)); each frame consists of five elements rigidly connected and post tensioned: (i) two inclined columns; (ii) two overhang girders; and (iii) a central girder. The bridge covers a total span of 100

m with central span of 68 m at the bottom of the columns and 58 m at the top of the columns, two “over-hanged” side spans of 20 m each with a total 10 m height of the bridge. The frame section is variable in depth as shown (not to scale) in Figure 3 (a) with depth variation between 1.4 m to 2.0 m. The inclined column is rigidly connected to the foundation, while the “over-hanged” side spans are supported to the side abatements by rollers. The spacing between frames is 2.5 m from center to center, where the five frames are compositely integrated with reinforced concrete deck slab of 0.225 m thickness (see Figure 3 (b)). It is impotent to mention that only preliminary design of the bridge is conducted as the detailed optimized design is out of the scope of this study. The focus of this study is on the evaluation of the bridge residual capacity in different levels of damage and time required to the bridge recovery to its structural performance after the construction or the required structural performance as mentioned earlier.

In this study, three scenarios for the bridge damage are assumed: (i) The bridge deck slab is partially or fully damaged and only one exterior frame of the frame bridge is partially damaged (this damage is assumed to reduce the bridge capacity by up to 50%); (ii) The bridge deck is largely damaged with the damage of more than half of the bridge frames which leave only one lane of the bridge functional (this damage is assumed to reduce the bridge capacity by up to 75%); and (iii) The bridge frames and deck slab are fully damaged and/or collapsed (this damage is assumed to reduce the bridge capacity by 100%).

As shown in Figure 4, the bridge has its full capacity as constructed when affected by the climate event (80,000kN.m, blue line). If the bridge superstructure partially damaged (partial damage of deck slab), the bridge capacity is dropped down up to 60,500kN.m (which is almost 80% of the original structural capacity; purple line). If more than two frames of the superstructure significantly damaged, the bridge capacity would drop to 60% of its original capacity (see Figure 4). Due to the partial failure, the bridge width is decreased which would lead to close one or two lanes of the traffic (if the remaining part of the bridge is approved to be safe). Figure 4 shows an extreme climate event that would cause a full (or 100%) damage, where the bridge is totally losing its capacity (red line). In this case, the bridge replacement is mandatory considering the required performance to avoid similar failure in future.

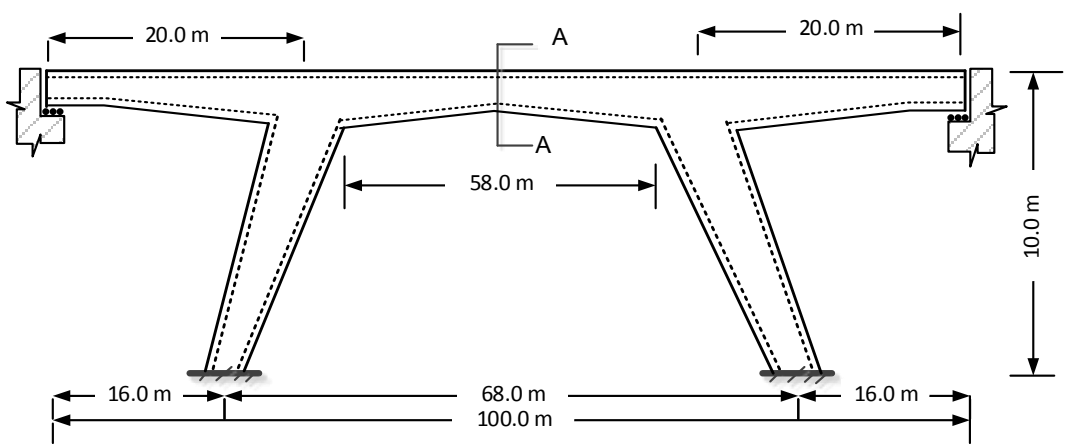

Figure 3 (a) Precast Prestressed Concrete Frame Bridge

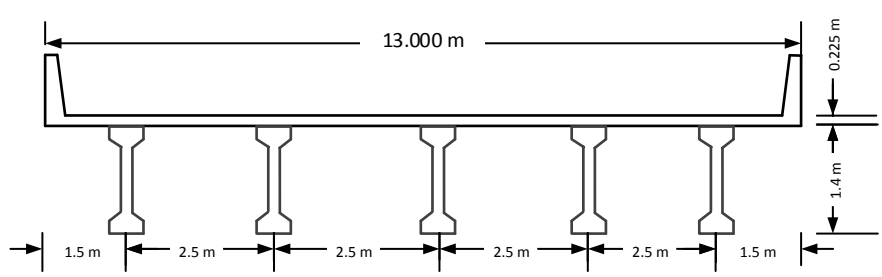

Figure 3 (b) Section A-A

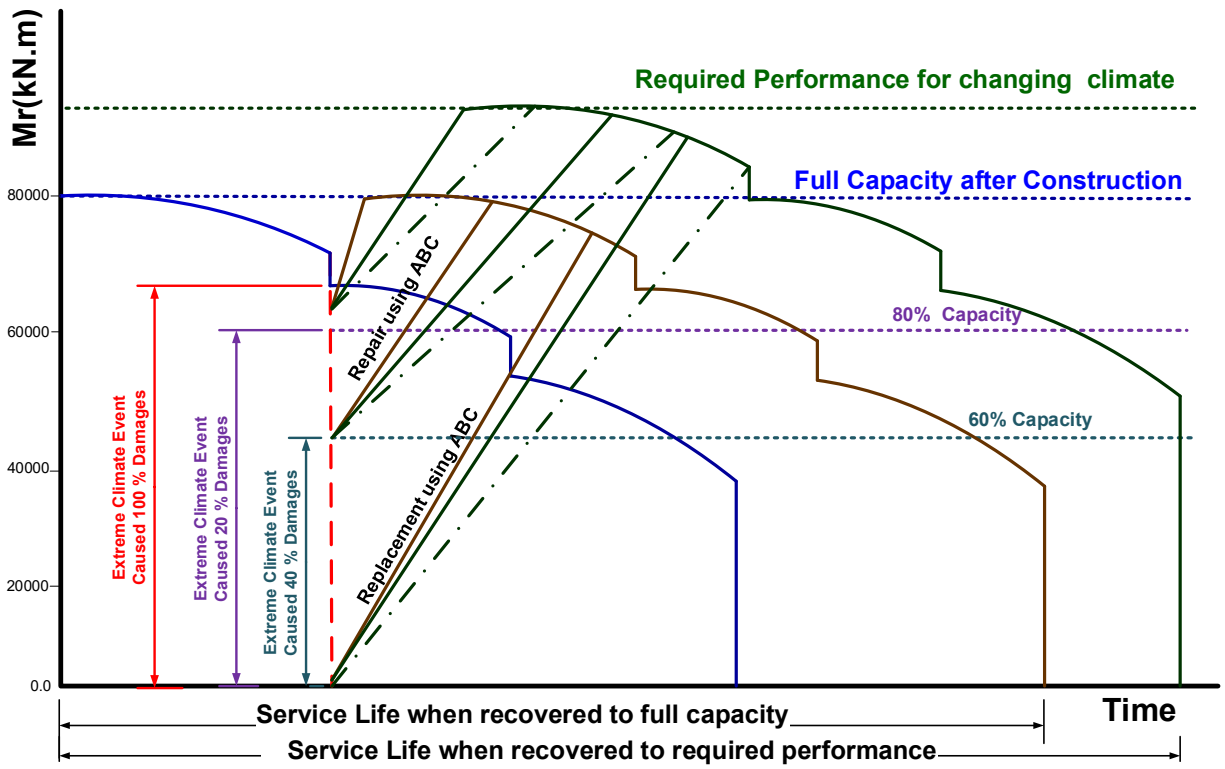

Figure 4 Frame bridge system resilience with ABC versus traditional rehabilitation for different damage levels due to extreme climate events

ENHANCEMENT AGING FRAME BRIDGES RESILIENCY USING ACCELERATED BRIDGE CONSTRUCTION

As shown in Figure 4 and previous section, it is assumed that three scenarios would resulted in partial damage or full collapse of the bridge. In the case study, the three scenarios for the bridge damage are assumed: (i) The bridge deck slab is partially damaged (this damage is assumed to reduce the bridge current structural capacity by 20%); (ii) The bridge deck is partially damaged with the damage of one the bridge exterior frames (this damage is assumed to reduce the bridge current capacity by 40%); and (iii) The bridge frames and deck slab are fully damaged and/or collapsed (this damage is assumed to reduce the bridge capacity by 100%).

The recovery plan and the required capacity after the climate extreme event is to be decided by infrastructure owners based on the bridge importance to the transportation network. Bridges are suggested to be categorized after a major disaster into three types based on their importance: (i) very important bridges where their recovery should be immediate as their operation is extremely important to first responders, hospitals and other essential service centers; (ii) important bridges-recovery should be fast, where their operation is important for people everyday life economically important; and (iii) other bridges, where their operation is important for economic activities and recovery of all urban activities.

The recovery time is also affected by the required performance of the bridge after an extreme event. Figure 4 shows two performance levels as a target of the performance recovery plan of the frame bridge: (a) recovery of the bridge structural performance to the original performance level (brown lines); (b) recovery of the bridge structural performance to a higher performance level based on the bridge importance and the required load capacity (green lines). The slop of the inclined lines that are related to each damage level represent the speed of the recovery to the specified structural performance level. Figure 4 shows that if the required performance level is higher than the original design level (or after construction level) then the service life of the bridge likely to be longer.

The inclined brown arrows present the recovery of bridge performance to the original design level from the three assumed damage scenarios mentioned earlier. The slop of these arrows present the recovery speed or the effectiveness of the bridge resilience. The inclined green arrows (sold or dotted) present the recovery of bridge performance to the required performance level from the three assumed damage scenarios shown in Figure 4 by different colors. The sold green arrows having higher of sharper slops than the slopes of the dotted green lines, which means the sold green arrows present faster recovery time than the dotted green arrows. The accelerated bridge construction is apparently providing the highest possible recovery time (the sold green arrows) versus classical in-site construction approach (the dotted green lines).

This study suggested the accelerated bridge construction (ABC) approaches to be incorporated for the repair of partially damage bridges or the replacement of fully damaged or collapsed bridges. Precast prestressed concrete components are to be used for the replacement of all damaged bridge elements. This would reduce the negative impacts that construction operations have on traffic flow (Palermo and Mashal 2012[10]).

CONCLUSIONS

The recovery plan and the required capacity after the climate extreme event is to be decided by infrastructure owners based on the bridge importance to the transportation network. After a major disaster, bridges are suggested to be categorized into three types: (i) very important bridges where their recovery should be immediate (their operation is extremely important to first responders, hospitals and other essential service centers); (ii) important bridges-recovery should be fast, where their operation is important for people everyday life economically important; and (iii) other bridges, where their operation is important for economic activities and recovery of all urban activities.

The recovery time is affected by the level of damage the bridge experience, the required performance of the bridge after an extreme event, and the rehabilitation or reconstruction approach. Based on the bridge importance and the required load capacity, two performance levels are the target of the performance recovery plan of a frame bridge: recovery of the bridge structural performance to the original or to a higher performance level. The recovery speed presents the effectiveness of the bridge resilience. The accelerated bridge construction is providing the highest possible recovery time versus classical in-site construction approach. This study suggested the accelerated bridge construction (ABC) approaches to be incorporated for the repair of partially damage bridges or the replacement of fully damaged or collapsed frame bridges.

REFERENCES

[1] Nemry. F., and Demirel. H. 2012. “Impacts of Climate Change on Transport: A focus on road and rail transport infrastructures.” European Commission, Joint Research Centre (JRC), Institute for Prospective Technological Studies (IPTS), PP 93.

[2] Wang, X., Nguyen, M., Stewart, M. G., Syme, M., and Leitch, A. 2010. “Analysis of Climate Change Impacts on the Deterioration of Concrete Infrastructure Part 3: Case Studies of Concrete Deterioration and Adaptation.” CSIRO, Canberra. ISBN 9780643103672.

[3] Saetta, Anne, Scotta, Roberto, and Vitaliani, Renato.1999. “Coupled environmental-mechanical damage model of RC structure”. J. Eng. Mech. 125(8); 930-940.

[4] Tong, M., Tham. L., Au. F., and Lee. P. 2001. “Numerical modelling for temperature distribution in steel.” Computer & structures; 6(30). PP 583-593.

[5] Chang. L., and Lee. Y. 2001. “Evaluation and policy for bridge deck expansion joints.” Final report: FHWA/IN/JTRP-2000/1; February.

[6] Bastidas-Arteaga, E., Schoefs, F., G. Stewart, M., Wang, X. 2013. “Influence of Global Warming on Durability of Corroding RC Structures: A Probabilistic Approach”, Engineering Structures, Elsevier, 51, pp.259-266.

[7] Mohammed, A. 2014. “Semi-quantitative assessment frame-work for corrosion damaged slab-on-girder bridge columns using simplified finite element analysis”. PhD. Thesis, Dep. Of Civil Engineering, University of Ottawa, Ottawa, Canada.

[8] Lounis, Z. and McAllister, T. 2016. “Risk-Based Decision-Making for Sustainable and Resilient” Infrastructure Systems. Journal of Structural Engineering. ASCE, 142(9). F4016005.

[9] Biondini,F., Camnasio, E., and Titi, A., 2015. “Seismic resilience of concrete structures under corrosion”. Earthquake Engineering Structural Dynamics, (44).
[10] Palermo, A., and Mashal, M., 2012. “Accelerated bridge construction (ABC) and seismic damage resistant technology: a new Zealand challenge”. Bulletin of the New Zealand Society for Earthquake Engineering, Vol. 45, No. 3.

FIELD-CAST CONNECTIONS FOR ABC: FROM RESEARCH TO BEST PRACTICES

Zachary B. Haber, Ph.D., Federal Highway Administration, (202) 493-3469, zachary.haber@dot.gov

Benjamin A. Graybeal, Ph.D., P.E., Federal Highway Administration, (202) 493-3122, benjamin.graybeal@dot.gov

INTRODUCTION

Prefabricated bridge elements (PBE) offer many advantages in terms of construction quality and timeline. However, these elements commonly require the use of field cast concrete or grout to close the connection regions between elements. Field-cast connections have proven troublesome for the construction process and for long-term performance, causing some owners to rethink their use of this accelerated bridge construction (ABC) technique. To address this challenge, researchers at the Federal Highway Administration's (FHWA)Turner-Fairbank Highway Research Center (TFHRC) have completed more than a decade of research investigating materials, structural configurations, and construction processes. The primary objective of this extended abstract and presentation is to provide best practices for the design and detailing of PBE connections. These best practices were developed by critically examining internal and external research findings while also working with owners to deploy innovative solutions and refine the existing practices. The topics discussed included connection grout durability, connection performance and reinforcement detailing, and precast concrete surface preparations. This extended abstract will highlight some of the key concepts related to these topic areas.

GROUT AND CONNECTION DURABILITY

The durability of field-cast grouts and PBE connections are critical for ensuring long-term performance of the prefabricated structural system. Connection grouts should have good freeze-thaw resistance, low chloride ion permeability, and good dimensional stability. The conventional cementitious grouts commonly used in connections typically have a low water-to-solids ratio, but the large volume of inert fillers means the effective water-to-cementitious ratio is relatively high. As such, some of these grouts have low resistance to chloride penetration and poor dimensional stability (*1,2*). These grouts are typically highly flowable, but can still require significant effort to properly consolidate in and around field-cast connection details. Even with proper consolidation, the interfaces that exist between the grout and precast concrete can result in regions of high porosity (Figure 1-a). These porous interface regions allow chlorides and moisture to ingress more easily, which leads to concerns about reinforcement corrosion (Figure 1-b and 1-c). An ongoing study has shown that salt ingress in a closure pour region can be up to double the penetration observed in the parent materials (*3*). The presentation will discuss some best practices for grout and connection durability, such as the use of internal curing to enhance dimensional stability, the use of sealer and nanotechnology to improve interface porosity, and the application of advanced materials.

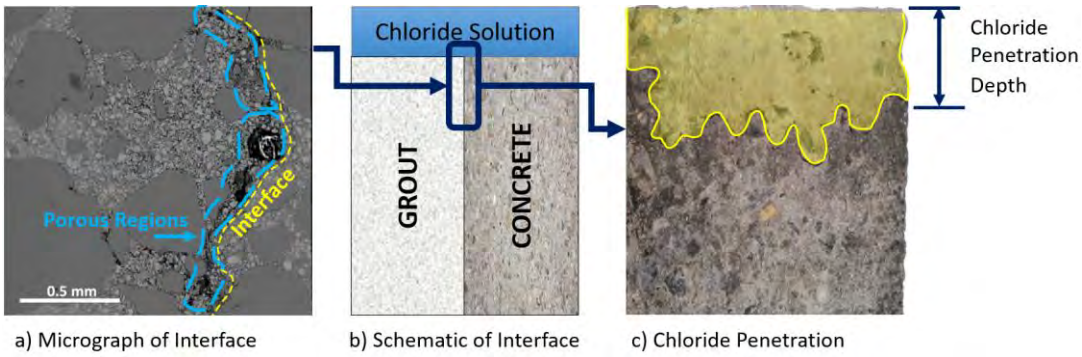

Figure 1. Durability issues at grout-concrete interfaces. Source: FHWA.

PRECAST CONCRETE SURFACE PREPARATION

Precast concrete surface preparation plays an important role in the performance and behavior of PBE connections. The cold joints between precast concrete and field-cast connection grouts are susceptible to premature cracking as a result of bond failure, which can cause structural or durability issues. If cracking is to occur, the design objective generally dictates that cracks form within the precast concrete elements and not at the concrete-grout interface. Understanding the factors that affect bond behavior between precast concrete and PBE connection grouts is critical for proper design and detailing of connections. Previous research conducted at TFHRC and elsewhere has identified several of these factors, which include the substrate concrete roughness (Figure 2), the moisture content of the substrate concrete, and the consolidation of the field-cast material against the substrate concrete (4). Of equal importance are the test methods used to evaluate the bond strength, an example of which is shown in Figure 3. Parts a) and b) show two different methods for evaluating grout-to-concrete bond strength. Part c) compares the "tensile" bond strength determined from each test given the same set of test parameters. Note that there is very little correlation between the two tests. The presentation will cover both best practices for surface preparation and laboratory bond testing.

a) Sand-blasted. b) Exposed aggregate level 1. c) Exposed aggregate level 2.

Figure 2. Precast concrete surface finishes. Source: FHWA.

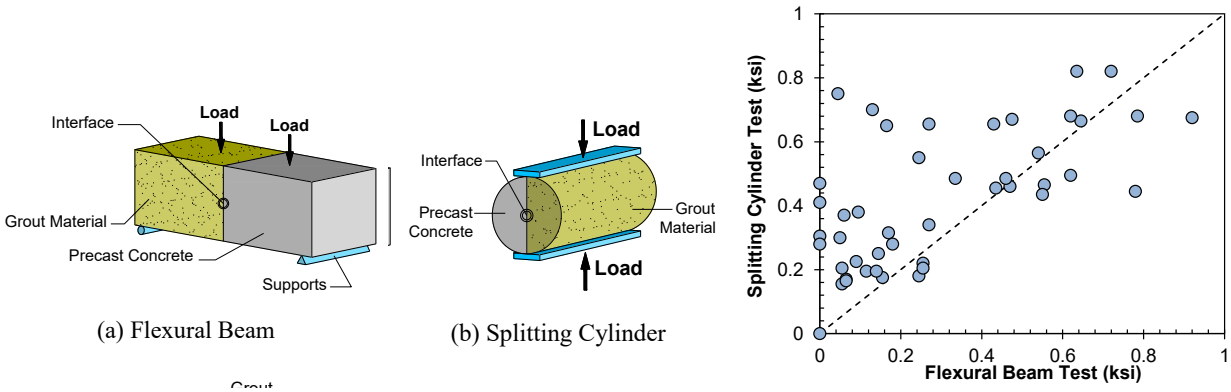

a) Flexural beam test. b) Splitting cylinder test. c) Comparison of splitting and flexural beam tests.

Figure 3. Grout-to-concrete interface bond testing. Source: FHWA.

STRUCTURAL PERFORMANCE OF CONNECTIONS

The structural performance PBE connections is critical. These connections tie structural elements together to form a functional structural system. The structural concrete research program at TFHRC has conducted over 80 large-scale experiments on PBE connections (5-7). Figure 4 shows two photos from the connection testing. These tests investigated different connection grout systems and connection detailing. Furthermore, specimens were subjected to different loading protocols such as low- and high-level cyclic loading, and ultimate loading. Results from these experiments provided a better understanding of how PBE connections behave with different design parameters. In addition, the TFHRC structural concrete group has conducted more than 600 pull-out tests on rebar embedded into ultra-high performance concretes (UHPC) to

investigate UHPC non-contact lap spliced connections (5,8). The data from this research was used to develop structural design guidance for PBE connections that employ UHPC-class materials (9). The presentation will cover some of the best practices developed from these different sets of experiments.

a) Bridge deck connection testing. b) Observed damage.

Figure 4. Laboratory testing of PBE connections. Source: FHWA.

SUMMARY

The structural concrete group at FHWA's TFHRC has made significant investments to better support the use of PBE connections and their field-cast grouts. The presentation will highlight many of the overarching best practices that have been developed from a decade of laboratory research.

REFERENCES

1. De la Varga, I., and Graybeal, B. A. (2015). Dimensional Stability of Grout-Type Materials Used as Connections between Prefabricated Concrete Elements. *Journal of Materials in Civil Engineering*, *1107*(9).
2. De la Varga, I., Spragg, R. P., Muñoz, J. F., Helsel, M. A., and Graybeal, B. A. (2018). Cracking, bond, and durability performance of internally cured cementitious grouts for prefabricated bridge element connections. *Sustainability (Switzerland)*, *10*(11).
3. Spragg, R. P., De la Varga, I., Nickel, C. A., Graybeal, B. A., and Poursaee, A. (2018). Chloride Ingress and Corrosion in UHPC Closure Pours. Presentation at Spring 2018 ACI Convention, Salt Lake City (UT), USA.
4. De La Varga, I., Haber, Z. B., and Graybeal, B. (2017). Bond of Field-Cast Grouts to Precast Concrete Elements, *FHWA-HRT-16-081*, 19 pp.
5. Haber, Z. B., and Graybeal, B. A. (2018). Performance of Grouted Connections for Prefabricated Bridge Deck Elements, *FHWA-HRT-18-036*, 157 pp.
6. Graybeal, B. (2011). Fatigue Response in Bridge Deck Connection Composed of Field-Cast Ultra-High-Performance Concrete. *Transportation Research Record: Journal of the Transportation Research Board*, *2251*.
7. Graybeal, B. A. (2012). Ultra-High Performance Concrete Composite Connections for Precast Concrete Bridge Decks, *FHWA-HRT-12-041*, 110 pp.
8. Yuan, J., and Graybeal, B. (2015). Bond of Reinforcement in Ultra-High-Performance Concrete. *ACI Structural Journal*, *112*(6).
9. Graybeal, B. A. (2019). Design and Construction of Field-Cast UHPC Connections, *FHWA-HRT-19-011,* 44 pp.

PERFORMANCE COMPARISON OF IN-SERVICE, FULL-DEPTH PRECAST CONCRETE DECK PANELS TO CAST-IN-PLACE DECKS

Esmail Shahrokhinasab, RA, Florida International University, (786)812-1047, eshah004@fiu.edu
David Garber, Ph.D., P.E., Florida International University, (305)348-4879, dgarber@fiu.edu

INTRODUCTION

Full-depth, precast concrete (FDPC) deck panels have been heavily used in bridge construction since the 1970's [1]. The use of these panels has traditionally been thought to both accelerate construction and improve the long-term durability performance of the bridge deck. While many engineers and academia are intrinsically aware that precast can perform equally or better than cast-in-place concrete, the evaluation between the two has never been studied holistically [2]. The main objective of this project was to determine the actual in-service performance of full-depth, precast deck panels compared to conventional cast-in-place (CIP) decks. The secondary objective is to determine successful and problematic details for these members.

METHODOLOGY

Initial information on behalf of FDPC deck panels and their performance were obtained through a survey of bridge owners, assembly of a full-depth precast deck panel database, and evaluation of bridge performance using available National Bridge Inventory (NBI) data [3]. The survey was sent out to all State DOTs and focused on gathering information related to FDPC deck panels including a list of successfully completed bridge projects utilizing the panels. The result of this effort was a database with over 280 bridges in the US that have used FDPC deck panels. Figure 1 shows the distribution of the database based on the states and construction time.

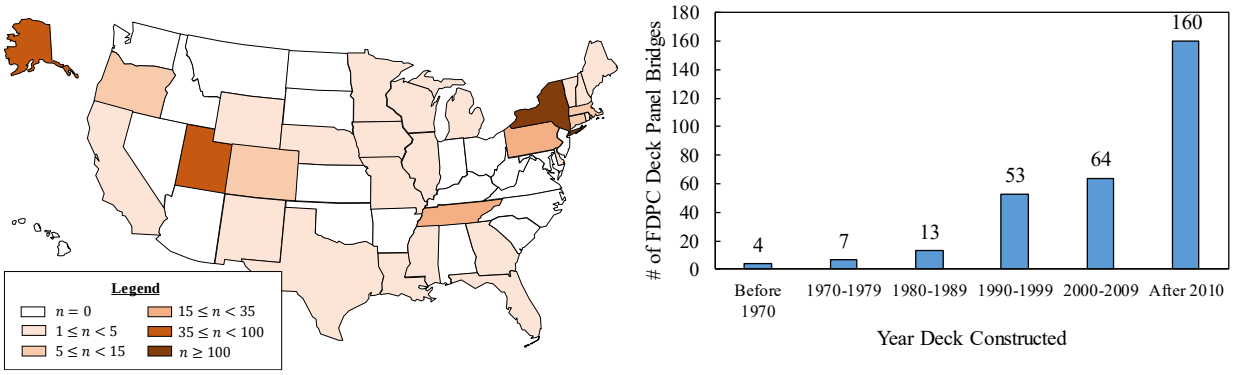

Figure 1: (a) Distribution of FDPC deck panels in all states, (b) Number of bridges utilizing FDPC deck panels in each decade

States also provided information on one or more comparison projects (two similar projects, one utilizing FDPC deck panels and the other CIP decks). Additionally, for all other bridges in the database, an appropriate comparison bridge with a CIP deck was chosen based on the specification of the bridge with FDPC deck panels. Main span materials and design, wearing surface, age, length of the largest span, and average daily traffic were the main criteria for choosing comparison projects. These comparison projects were used to evaluate the long-term performance of FDPC deck panels through the NBI, collected inspection reports, and the Long-Term Bridge Performance (LTBP) InfoBridge [3], [4].

DATABASE ANALYSIS

Analyzing database and comparing the performance of bridges with FDPC deck panels to CIP decks had been done based on two different procedures:

1- Direct side-by-side comparison according to the rating trend during the bridge life
2- Group comparison based on general system performance, which focused on classifying the important parameters like climate, structure type, traffic condition, and more.

Furthermore, two values were used to compare the performance of bridges with FDPC deck panel decks to those with CIP decks: (a) deterioration rate of the deck and (b) estimated service life.

Deterioration Rate and Estimated Service Life

The calculated variables used to compare the performance of the bridges were deterioration rate and estimated service life. The deterioration rate is the slope of the linear regression of the year and deck rating since the time of deck construction. The estimated service life of the deck was calculated based on the time it takes for the deck rating to reach a rating of 4, based on the deterioration rate and the starting deck rating. A deck rating of 4 was used as the threshold for deck repair needed as this value corresponds to the boundary between fair and poor behavior used by previous researchers [5].

Ranking of Comparison Projects

All comparison projects needed to have the same of the following parameters to be considered valid comparisons:

- Material and structure type
- Overlay or wearing surface
- Climate zone

Both comparison projects needed to either have an overlay or wearing surface or not have an overlay or wearing surface. The type of overlay did not need to be the same for the comparison projects.

Other variables could have different values between them. The quality of the comparison was rated based on how similar the comparison projects were with these other criteria. These variables included:

- Span length
- Year of construction
- ADT/ADTT

A rating was given to each comparison based on the degree of similarity of the values for each of the comparison projects.

RESULTS

The results of this study are summarized in two categories:

Side-by-Side Comparison

A side-by-side comparison was conducted for the 280 comparison projects from entire FDPC Deck Panel Database. In 49 of the 172 comparison projects, the bridge with a CIP deck had a higher deterioration rate, shown in Figure 2. The bridge with a FDPC deck panel deck had a higher deterioration rate in 76 of the 173 comparison projects. The bridges with the two types of decks had the same deterioration rates in 47 of the comparisons.

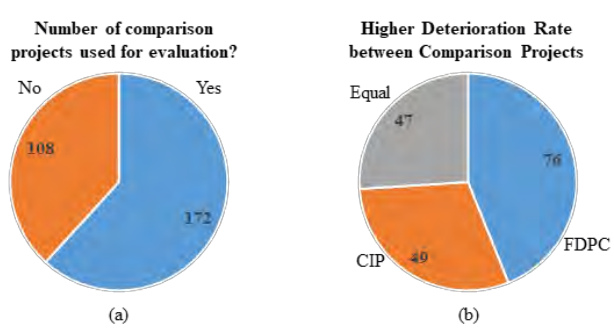

Figure 2: (a) Number of comparison projects used for evaluation (b) type of bridge with higher deterioration rate

Bridges with FDPC deck panels were found to have a similar performance (similar deterioration rate and estimated service life) to the comparison bridges with CIP decks. Table 1 summarizes the overall comparison of FDPC deck panel decks and CIP decks

Table 1: Overall average performance of bridges with FDPC deck panel decks and CIP decks

Deck Type	*FDPC*	*CIP*
$n_{bridges}$	206	177
Avg. $n_{inspections}$ *per bridge*	12.5	13.0
Avg. Year of 1st Inspection	2004	2005
Deterioration Rate	-0.12	-0.09
Estimated Service Life (year)	33	35

Performance Comparison Based on the Classification of Variables

Important variables that were used for comparison purpose includes: joint type, impact category, climate zone, wearing surface, main span material type and traffic volume.

CONCLUSION

The performance of FDPC deck panel and CIP systems was evaluated based on the NBI deck rating. The average performance of bridges with FDPC deck panels were compared with similar bridges with CIP decks. Results showed almost similar performance for both bridges with FDPC deck panel and CIP decks. As the precast panel itself offers superior durability to CIP decks, these results may suggest that there is room for improvement with joint design and construction.

These performance comparisons were further evaluated in several subcategories. Focusing on joint types revealed that UHPC with straight bar (for transverse or longitudinal joints), longitudinal post-tensioned (for transverse joints), and conventional concrete with hooped bar details (for longitudinal joints) are most popular and have good performance. Considering climate condition showed that shortest average estimated service life is observed in cold climate zones due to a lot of freeze-thaw cycles, which combined with moisture and deicing salts. Also, results showed that all overlay types and bridges without overlays perform almost similarly. There are limitations to this approach, but this work can be used as a starting point to a more in-depth evaluation of these projects (e.g. non-destructive testing) and revisited every 5 to 10 years as the bridges continue to age and new bridges are constructed.

REFRENCES

[1] S. S. Badie and M. K. Tadros, “NCHRP Report 584: Full-Depth, Precast-Concrete Bridge Deck Panel Systems,” National Cooperative Highway Research Program (NCHRP) Report 584, 2008.

[2] M. A. Issa, A. T. Idriss, I. I. Kaspar, and S. Y. Khayyat, “Full depth precast and precast, prestressed concrete bridge deck panels,” *PCI J.*, vol. 40, no. 1, pp. 59–80, 1995.

[3] Federal Highway Administration (FHWA), “National Bridge Inventory (NBI),” 2016. [Online]. Available: https://www.fhwa.dot.gov/bridge/nbi.cfm. [Accessed: 05-May-2016].

[4] “Home Page - LTBP InfoBridge.” [Online]. Available: https://infobridge.fhwa.dot.gov/. [Accessed: 03-Aug-2018].

[5] Y. J. Kim and D. K. Yoon, “Identifying critical sources of bridge deterioration in cold regions through the constructed bridges in North Dakota,” *J. Bridge Eng.*, vol. 15, no. 5, pp. 542–552, 2009.

UHPC Overlay at Multiple Bridge Interchange in Elsmere, DE

William A. Geschrei, P.E., Vice President | Whitman, Requardt & Associates, LLP
(443)224-1530 | wgeschrei@wrallp.com

Zachary M. Gabay, P.E., Project Engineer | Whitman, Requardt & Associates, LLP
(410)246-3437 | zgabay@wrallp.com

PROJECT BACKGROUND

The 'Elsmere UHPC Bridge Overlay' project features three Delaware Department of Transportation (DelDOT) owned bridges: BR 1 600, BR 1 601, and BR 1 604 located within the SR 141 and SR 2 interchange near Elsmere, DE, or a few miles west of Wilmington, DE. Two of the bridges, BR 1 600 and BR 1 601, incorporate a 180-ft. long two-span continuous steel superstructure. The third bridge, BR 1 604, incorporates a varying length simple span steel superstructure with an approximate average span length of 80-ft.

These structures were constructed in 1973 and the steel superstructures are in good condition. However, two aging original bridge decks and one prematurely delaminating overlay at the interchange (BR 1 600) require rehabilitation to ensure long term serviceability. In addition, these bridges have failing transverse roadway joints resulting in abutment end diaphragm deterioration and significant areas of spalled and delaminated concrete at the abutment stems.

Construction is set to begin in the spring of 2020 and all project work will be completed by the end of the calendar year.

BRIDGE ASSESSMENT & REHABILIATION OBJECTIVES

An impact-echo study was performed as a non-destructive assessment of the bridge decks. It was determined that the bridge decks were in overall satisfactory condition with the worst defects at the end of the decks near the existing failing transverse roadway joints. The ensuing field inspection confirmed the failing BR 1 600 overlay and deteriorating abutment end diaphragms at all three bridges. This was particularly concerning at BR 1 600, where the end diaphragms had been replaced as part of a 2012 rehabilitation effort.

A final assessment concluded that the bridge decks can remain in-service. However, the decks, as well as the end diaphragms, bearings, and substructure components, should be better protected from water infiltration.

The objective of the rehabilitation is two-fold: to significantly reduce future maintenance costs (and future traffic impacts) on these structures and to significantly increase their remaining service life. Due to the high volume of commuter traffic at this interchange, accelerated bridge construction (ABC) techniques were necessary to minimize specific disruptive work activities, such as ramp closures, as well as overall project duration.

As such, WRA and DelDOT determined that the rehabilitation project will repair all defective concrete components, relocate the transverse abutment bridge joints away from and off of the bridge superstructures, and seal and protect the bridge decks with a machine-placed UHPC overlay.

PROJECT SCOPE

DelDOT is sensitive to traffic impacts at this heavily used commuter interchange, increasing the complexity of this project beyond the scope of using an innovative, yet promising, overlay material. As a result, the design team implemented a maintenance of traffic (MOT) plan using ABC techniques to minimize disruption to the public and bring value to the project. Ramp closure durations, traffic detour signage, and road-user costs were studied in equal measures to deck preparation techniques, machine-paver capabilities, and UHPC on-site batch production and placement.

The project is completed in two main MOT phases. The MOT plan dictates bridge construction staging on the SR 141 mainline, the divided ancillary collector-distributor lanes, and an on-ramp to SR 141 southbound. The MOT plan includes a liquidated damages incentive on two critical MOT sub-phases to curtail crucial traffic impacts on intersection ramps. These work activities are at the forefront of the main MOT phases and subsequently traffic restrictions will be lifted as soon as construction is complete in these critical areas.

The UHPC's rapid strength gain, used in conjunction with an expedited placement via machine-paver, is a great ABC tool for completing the construction of this project in staged work zones. The machine-paver capabilities were studied to develop construction stage layouts that will optimize its use. Careful consideration was given to the ultimate placement of UHPC overlay joints between machine-paver passes. To ensure a smooth and expeditious construction operation, the contractor is required to provide a detailed placement plan and to complete a trial pour prior to overlay placement.

OVERLAY DETAILS

The UHPC overlay forms a superior bond with the underlying concrete material, however, it is imperative to remove unsound concrete in the existing deck and to prepare a bonding surface with a roughened amplitude.

FWHA research shows that premature failure will occur within the existing substrate below the bond interface if all deleterious material is not removed. Mechanical milling and hydrodemolition will be used to prepare the existing deck surface at all bridges - even at BR 1 601 and BR 604 where less removal is required. The mechanical milling will allow for higher quality hydrodemolition and will ultimately provide a faster and cleaner removal operation. The bonding surface will be prepared with a 1" amplitude to provide a mechanical connection to the overlay-deck interface in addition to the material adhesion at the micro-level.

The UHPC overlay material will be placed in two (2) thicknesses: 2⅞" average at BR 1-600 and 1¼" average at BR 1-601 and BR 1-604.

A separate, primary pour of conventional deck concrete was considered to limit the thickness of the UHPC overlay at BR 1 600. While this would reduce the volume and expense of the UHPC, ultimately this concept was dismissed due to a longer construction time and the undesirable resulting second material interface near the roadway surface.

Finally, much consideration was given to mixing, construction transport, placement, and finishing of the UHPC overlay. This project will feature a dozen or so UHPC pours from early spring to the end of the year. The specifications dictate when the contractor can and cannot place UHPC with respect to ambient- and mix- temperatures and includes provisions for heating to maintain satisfactory in-situ temperatures for strength gain and curing after placement.

Project Location Map – SR 141 & SR 2 interchange near Elsmere, DE

BOTHASFONTEIN INTERCHANGE BRIDGE, SOUTH AFRICA – AN ABC COMPOSITE STEEL/CONCRETE 4-SPAN BRIDGE ERECTED IN TWO CONSECUTIVE WEEKENDS OVER 29 YEARS AGO

José Carlos Calisto da Silva, MSc, P.E., Biggs Cardosa Associates Inc., (949)424-9601, jdasilva@biggscardosa.com

ABSTRACT

The Bothasfontein Interchange Bridge was constructed almost 30 years ago over the busiest freeway in Africa, which is the Ben Schoeman freeway, connecting Pretoria to Johannesburg. There was a very natural concern for traffic interference on a road with highly congested traffic and severe restraint regarding the depth of the bridge. Innovative solutions had to be found, which passed by the consideration of a composite steel concrete structure and precast concrete deck panels for the full width of the bridge with transverse unbonded prestressing. In the end a very elegant structure was achieved, with aesthetically pleasing post-tensioned V columns, which was put in place over the course of two consecutive weekends, one for the steel bathtubs, and the other for the precast concrete deck panels, for which profit was taken of the two weeks that many of the Pretoria and Johannesburg residents would take off for the coast during the Summer/Christmas vacation. They have left without any bridge, and when they returned a whole new 122 m (400') long bridge was, all of a sudden, there.

At the time, ABC wasn't commonly used, or wasn't even recognized as a procedure, it was the author's intention to draw the attention of the South African engineering community to the positive aspects of this type of construction, and to promote its use in applicable situations, thereby providing the Client with a better engineering, faster execution time, less disruption of existing traffic, and a cost effective solution.

INTRODUCTION

In order to cope with expected traffic volumes, it was necessary to double road P66-1 through the interchange over the Ben Schoeman freeway, which links Pretoria and Johannesburg and is one of the busiest roads in the whole of Africa, if not the busiest, since in 1989 it already carried a number of cars in excess of 50,000/day (about 3,600 v/h).

This necessitated a whole new bridge inside the interchange, while under full traffic conditions.

Therefore, in order to limit road closure and traffic interference in general, the bridge was designed to facilitate a rapid construction, according to what we, nowadays, call ABC (Accelerated Bridge Construction).

Tenders for this bridge were invited in August 1989 and construction started in November 1989, with the contract completion and opening to traffic in December 1990, i.e. about 2 years after start of design.

Additionally, there were strong geometric constraints limiting the depth of the bridge, in spite of spans of 40 m (131 ft), due to the needed concordance with the other direction of traffic of the interchange, on top of another close by parallel bridge, keeping the needed clearance over the Ben Schoeman freeway, and considering the presence of relatively low power lines over the bridge.

Figure 1 - Perspective View of Bridge

For the purpose above, and to satisfy the site geometric constraints, after the consideration of different types of structures, it was concluded that the type that would satisfy all the requirements would be a steel-concrete composite deck, with the steel part materialized in two relatively shallow steel troughs, and the deck in precast pretensioned concrete planks, 2 meters (6.5 ft) wide, and the full width of the bridge long.

In fact, apart from minimal traffic interference for the construction of the central pier, making use of a quite wide median, some 40 ft wide, and the side piers and abutments, sufficiently away from the traffic lanes, it

only took the closure of the Ben Schoeman freeway, with traffic diverted through the on and off ramps, for two consecutive weekends to put the bridge in place.

In one weekend the steel troughs were erected in place and duly connected, while in the next weekend the precast concrete planks were also placed on top of the steel troughs and solidarized between themselves.

For minimizing traffic interference, the two weekends for closure of the road were strategically chosen as coinciding with the dates in December when most South Africans take their Summer/Christmas vacation, thus allowing minimal traffic during the closures.

Special consideration was also given to the bridge aesthetics, owing to its high visibility, giving the great volume of traffic on the Ben Schoeman freeway.

OVERALL FEATURES OF THE BRIDGE

The composite steel deck structure comprised four skew spans of 20.5 m (67.3 ft), 39.5 m (130 ft), 39.5 m and 20.5 m of uniform thickness, in a double spine open steel box girder, topped by precast concrete planks.

The overall deck width is 13.95 m (45.8 ft), carrying the northbound direction of traffic of road P66-1.

In the Bothasfontein bridge, the designer believes that his two main goals were achieved, i.e. a structure that is aesthetically pleasing and relatively straightforward in design and construction.

The superstructure is a composite steel and concrete design, with the steel girders as a double spine steel trough in weathering COR-TEN steel and 1.0 m deep, while the deck slab consists of precast, prestressed concrete planks in 50 MPa (7.3 ksi) concrete, only 8” deep.

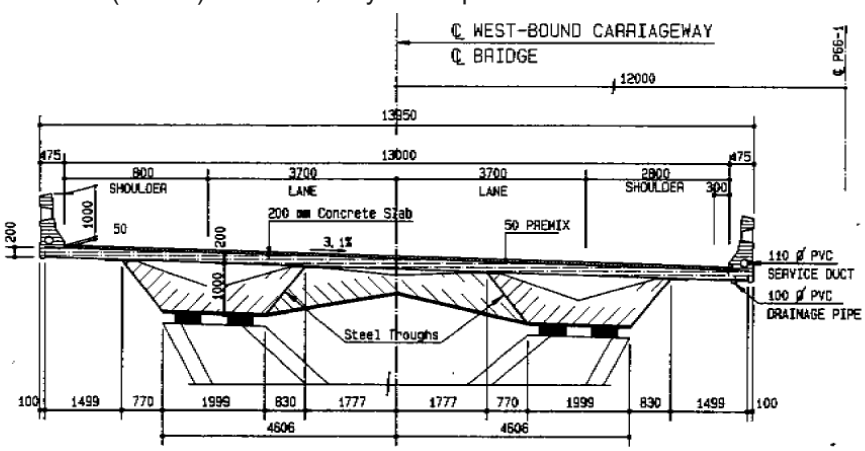

Figure 2 - Typical Cross-Section over the Piers

SUPERSTRUCTURE

The steel girders in the Bothasfontein bridge are open-top trapezoidal boxes, or “bath tubs” as more commonly used in the U.S., with dimensions shown in Fig. 3.

In order to retain the existing adjacent bridge and ramps in the interchange complex, as well as providing sufficient clearance on the Ben Schoeman freeway underneath, the new bridge, depth had to be kept as low as possible. This dictated a deck with an overall depth of circa 1,200 mm (3’-11 ¼”), resulting in a L/d (span/depth) ratio of 32.9 (or 3% d/L) for the long inner span of the continuous beam (Fig. 1).

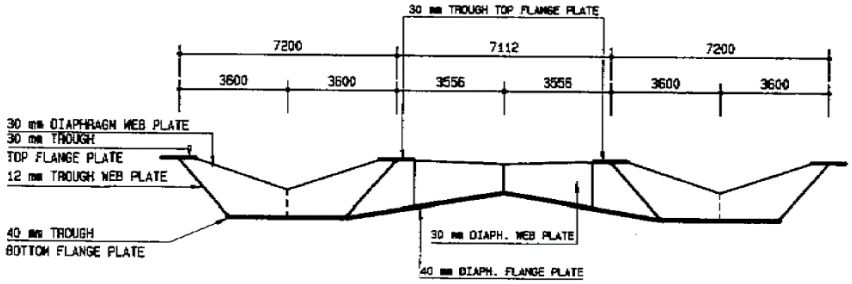

Figure 3 - Cross-Section Through Span Diaphragms

The steel troughs are only 1.0 m (3.3 ft) deep, see Fig. 2, with 600 mm x 30 mm (23 5/8” x 1 3/16”) top flanges and 2,000 mm x 40 mm (6’-6 3/4” x 1 9/16”) bottom flange, reduced to 30 mm (1 3/16”) thick in the jack spans.

The webs are made out of 12 mm (15/32”) plates, which slope inward from a width of 3,600 mm (11’-9 3/4”) at the top to a width of 2,000 mm (6’-6 3/4”) at the bottom, thus in an angle with the vertical of 38º 40’.

The deck comprises two bath tubs in order to optimize the spacing of the transverse supports for the concrete deck slab. This facilitated the use of a uniform thickness, reduced to the possible minimum – 200 mm (8”) for a slab post-tensioned in both directions.

In the case of a straight structure, it might have been cheaper, even though less aesthetical, to use a multiple-beam system of single-web girders, and, in fact, this hypothesis was analyzed at the design stage. However, due to the existing 52º skew, added to a radius of curvature of 450 m (1,480 ft), this solution would necessitate piers with large crossheads which would extend over the freeway, when the planned 6 lane widening would be implemented, thus infringing with the vertical clearance.

To avoid this problem, it was decided the use of twin box girders, as this structural system provides ample torsional rigidity, capable of withstanding the large torsional moments caused by the offset of the bearings.

With the open-top boxes, there were in the past distortion and twisting problems with the boxes, before they were connected and made integral with the concrete slab. To avoid this problem in the interim handling and construction phases, a trussed bracing system was used for bracing the bath tubs at the top flanges level. The use of the twin tubs has the added advantage of providing narrow bottom flanges, which do not require stiffeners.

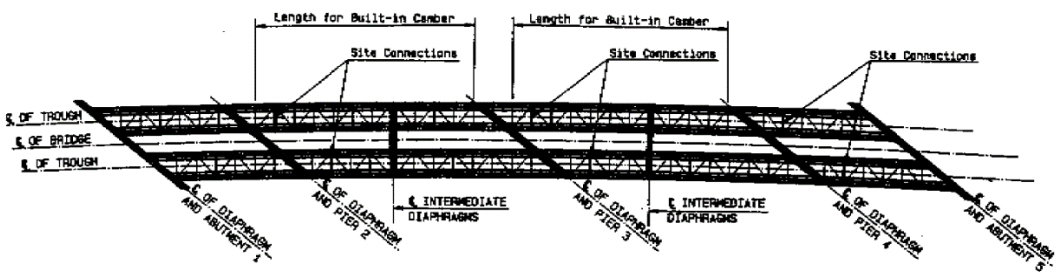

Figure 4 - Plan of the Steel Structure with the Horizontal Bracing

HORIZONTAL BRACING

The used horizontal bracing consists of a trussed system of diagonals and cross-elements comprised of back-to-back unequal double angles.

The bracing was made stronger than required by calculation (wind analysis), in order to have a reserve for the self-weight torsional moments during transportation and erection, partly resulting from the severe skew and curvature, in order to avoid any warping or geometric change, quite critical in the present case where the troughs have to accommodate and support a prefabricated concrete deck.

The connection points of the bracing were chosen to coincide with the vertical stiffeners of the webs, in order to avoid the introduction of additional stresses on the top flanges.

Initially the bracing was specified as to be removed once the concrete slab would be monolithical with the steel troughs. This was intended to avoid major loss of longitudinal prestress in the concrete slab, due to the restraint that the bracing would introduce against creep and shrinkage.

At the construction stage, both the contractor and the designer have realized the difficulty of this task, due to the little space available inside the boxes, to manipulate the bracing elements of over 3.5 m (11.5 ft) in length and weighing about 80 kg (176 lb) each.

Further analysis on the creep and shrinkage of the concrete panels was made, taking the bracing restraint into account, in an attempt to find a better solution for the removal or not of the horizontal bracing.

Finally, the decision was to leave the A40 steel bracing inside the troughs, provided that they would be painted to avoid electrochemical reaction with the COR-TEN steel of the tubs. Also, in order to reduce the bracing restraint, the connection bolts would be alleviated by a quarter of a turn when construction was

complete and, to avoid their local unscrewing and possible noise due to vibrations, they were provided with Nyloc rings.

Creep and shrinkage losses were also minimized by stressing the transverse prestress of the precast planks as late as possible, i.e., when they were, at least, 3 to 4 weeks old, which was achieved within the contractor's work schedule. The interaction due to composite behavior with the steel structure was also possible to postpone until the planks were 2 months old at the earliest, therefore significantly later than initially assumed for the design.

DIAPHRAGMS

The diaphragms were reduced to a minimum and were provided only over the supports (3 piers) and in the center of the two main spans.

These diaphragms are connected to the steel troughs by full moment connections, in order to increase their effectiveness, and were designed with triangular cut-outs of 0.5 m (1'-7 ½") to allow access inside the troughs for inspection.

Initially all the diaphragms were idealized as single flanged and triple webbed tee sections, which were thought to be a simplification from a construction point of view. In fact, they would provide the required stiffening, while locally rigidifying the bottom flange over the bearings, allowing ample access for welding as the webs were spaced at 400 mm (15 ¾").

However, the wholly welded conception of the site splices created a time problem for the site operation, as the whole erection and fastening of the bridge components was to be attempted in a single weekend.

To accommodate the scheme proposed by the contractor, the diaphragms over the piers and in the mid-spans were changed to I sections and the site connections to High Strength Friction Grip (friction critical in the U.S.) bolted connections.

The diaphragms over the abutments were kept with their initial shape, as the space between the webs was to be filled with concrete of high-density aggregates (magnetite ore, in the present case), with an increase in the unit weight by almost 2.5 times (circa 0.350 kip/ft^3).

This requirement was intended to counteract the uplift tendency shown by the bearings under the spines at the acute angle side, caused by the severe skew of the bridge, in accumulation with small length of the jack spans in relation to the adjoining main spans (approx. 50%, instead of the desirable 70% to 75%).

CONCRETE DECK

The concrete deck comprises two very distinct parts: one cast in-place corresponding to the trapezoidal regions at the ends, created by the skew; the other composed of precast rectangular concrete planks.

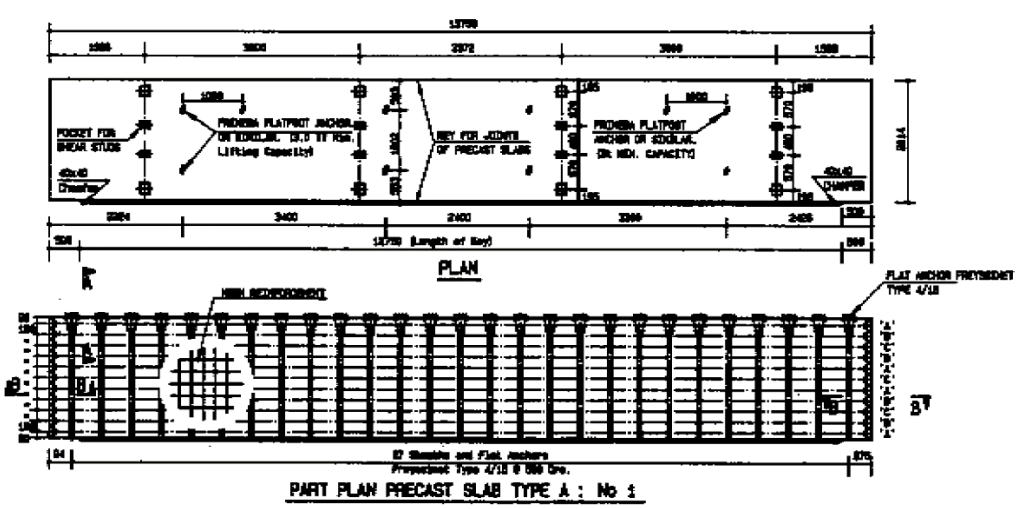

Figure 5 - Plan View of the Slab Planks (pockets for stud connectors & PT cables)

The part cast in-place was executed on left-in-place steel sheathing, supported on the top flanges of the troughs and on the steel bracing, which was still not a common procedure in the RSA as considered costly at that time (lost wood formwork being used), and had only started being experimented on in Europe.

The precast concrete planks are 2.0 m (6'-6") wide over the entire width of the deck (13.95 m) and only 200 mm (8") deep. This reduced thickness caused some difficulty in accommodating the prestressing tendons in both directions, in accumulation with the rebars, also in two directions on top and bottom.

The concrete planks were provided with pockets for posterior inclusion of the stud steel connectors that made them composite with the steel troughs. Between the panels, joints were created with a recessed configuration to facilitate the threading of the longitudinal PT tendons, and which were grouted once all the planks would be in place and prior to the longitudinal post-tensioning.

Both the in-place portion and the precast portions of the deck were post-tensioned in the transverse direction of the deck, using plastic coated unbonded monostrands. Each panel was post-tensioned with 11 x 15.9 mm (0.6") strands, of which 4 are straight and run near the top face, other 4 are also straight and run near the bottom face, and the remainder 3 are draped to enhance the flexural and shear capacity of the slab at the critical stress points.

Owing to the high susceptibility to corrosion and ensuing failure of unbonded prestress systems, particular attention was paid to the anchor details, providing them with grease filled screwed-on caps.

The sequence of erection, solidarizing together and attachment to the steel troughs of the concrete planks, was defined in as great detail as possible. At construction stage, it was further discussed with the contractor and adapted to suit his available means and to accommodate suggestions for possible simplification.

LONGITUDINAL POST-TENSIONING

1) By using prestressing tendons, placed inside the concrete slab;

2) By pre-cambering, where the steelwork is placed at a position above the final level of supports prior to erection of the deck, and, once the structure has become composite, lowering it on to the final support level.

The reason for such apparent sophistication was to satisfy the requirement of a fully prestressed structure at the concrete level, i.e. no tensile stresses, during the service life of the structure, and also to meet the ultimate limit state requirements, as the bonded longitudinal PT cables are the only continuous "reinforcement" provided, owing to the utilization of precast concrete panels. Also, the lack of space to provide for more longitudinal cables, if only prestressing tendons were used, was another deciding factor.

If one takes into consideration both the tensile stresses from hogging moments over the supports, as well as the tensile stresses caused by the restraint opposed to free shortening from creep and shrinkage of the concrete slabs, it may be appreciated the necessity for the high degree of prestress as was introduced in the structure.

It must be noted that the province of the Transvaal (nowadays Gauteng) is subjected to very low levels of humidity, at circa 40% average, partly due to its altitude (about 6,000 ft), which makes the effects of creep and shrinkage particularly significant.

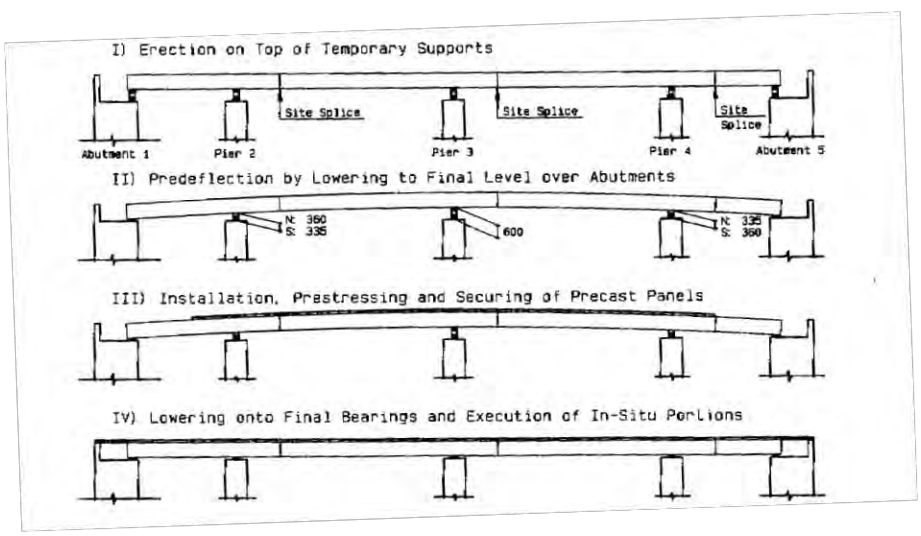

Figure 6 - Precamber Sequence

Thus, the structure was post-tensioned with 38 cables of 4 x 12.9 mm (0.5”) high strength (270 ksi), low relaxation strands and by precambering the structure from a height of 600 mm over the central support, varying to zero over the abutments (see Fig. 6).

The post-tensioning introduced by the cables is applied before the concrete slabs are integral with the steel troughs. This procedure, which brought about some additional complication of execution, was followed in order to avoid the redistribution of prestress into the steel structure.

SUBSTRUCTURE

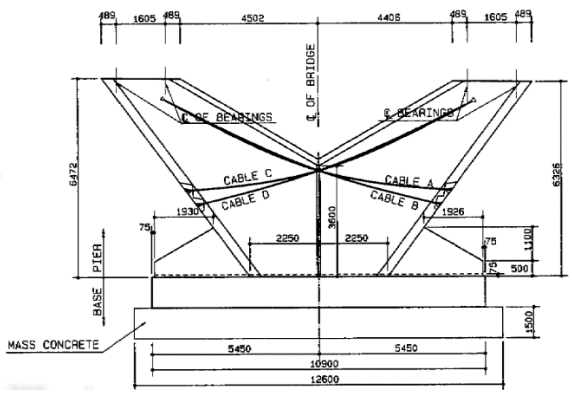

Figure 7 - Elevation of Piers

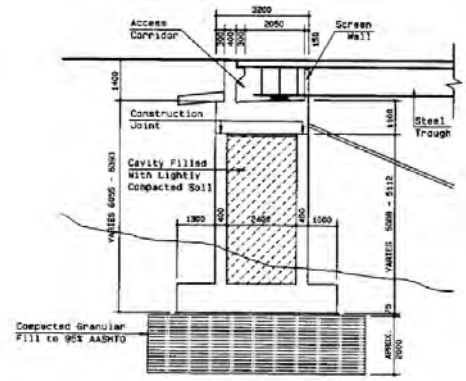

Figure 8 - Section through Northern Abutment

Concrete Piers

The piers were detailed in a very wide “V” shape, created not only as an aesthetic feature, but also to minimize foundation work, and, especially, to take them as far as possible from the freeway traffic lanes.

Because of the strong inclination of the pier’s legs, intended to match the inclination of the webs of the steel troughs, they had to be prestressed to avoid congestion of reinforcement along their upper faces, as well as long term deformations due to creep of the concrete, which also had an advantage for durability.

The piers are founded on spread footings of relatively small dimensions (virtually no seismic demand in the RSA), particularly in the transverse direction, taking advantage of the reduced self-weight of the bridge in relation to a concrete solution.

Because the bearing stratum is some 3 to 5 meters (10 to 17 ft) below ground, and in order to increase the stability of the foundations, the difference in level was made up of mass concrete, lightly reinforced at the bottom and connected to the footings by dowels around the perimeter.

Abutments

The abutments are of a completely closed box configuration, which was partly due to the need to create an access corridor to the ends of the steel troughs for access to their inside for inspection, which required a fairly wide cap beam. By taking advantage of this extra width, it was possible to have fairly thin walls both at the front and at the back of the abutment, thereby providing support at both ends for the cap beam.

The boxes so created were filled up with fill material to increase their stability and to create a surface against which to cast the cap beams.

This type of abutment has the advantage to be easily detailed and constructed, and obviates the need for counterforts, especially at the higher side of approximately 8.0 m (26.2 ft); furthermore, it allowed to eliminate the need for wingwalls. In a way, the abutments reflect the main philosophy behind the whole conception of this structure, which was to try and simplify design and construction of the same, by using somewhat thicker or larger elements in favor of reducing labor to a minimum, but at the same time not compromising on aesthetics.

CONSTRUCTION

The modular steel design meant that sections of the bridge could be constructed elsewhere and then brought to the site by road, assembled, and bolted in position as preparation for the final on-site welding.

The sections of the steel girders were transported from Dorbyl’s factory, located some 60 km from the site of construction, on low-beds semi-trailer trucks, the largest being 40 m (131.2 ft) long and 60 tonnes heavy.

Erection of the steelwork was carried out on the 21.st July 1990, in one full day (Fig. 9 and 10), using a 225-ton crawler crane and two 40-ton mobile cranes for the erection of the steel sections.

Figure 9 - Construction - Early Morning (7:00 am) on 21.st July 1990

Figure 10 - Construction - Late Afternoon (5:00 p.m.) of the same Day

As each section was installed and joined with temporary bolting, welding was done on the outside of the troughs, above the closed roadway. Inner welding was completed the following week.

The rectangular precast deck slabs were constructed on site while the steel troughs were being fabricated. A formwork platform that accurately matched the final deck alignment and profile and transverse elevations was used to cast the slab panels against, and these were partially post-tensioned in the transverse direction with unbonded individually protected monostrand tendons.

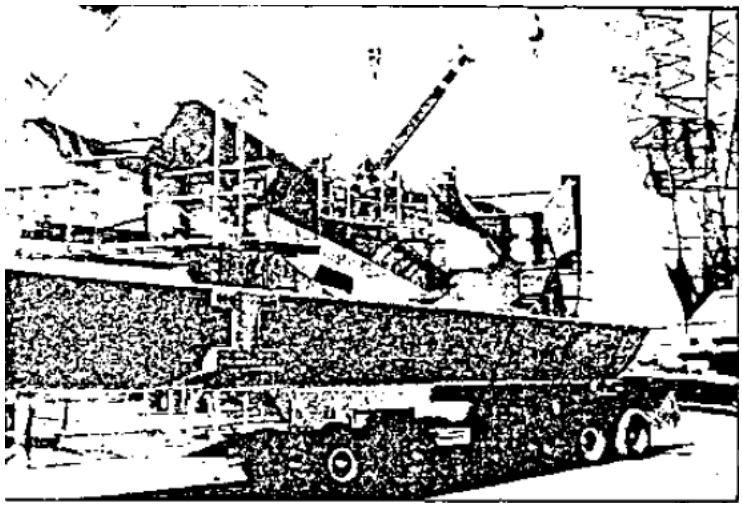

Figure 11 - Placement of the Open Trough Girders

After the deck slabs were lifted in position, the longitudinal tendons were threaded through and tensioned to provide a slab compression of 8.0 MPa (1.16 ksi). The stud connectors were installed, and openings at the joints were closure grouted.

The transverse tendons were then fully tensioned to provide a compressive stress of 3.6 MPa (0.522 ksi) in this direction and uniformly distributed along the entire bridge.

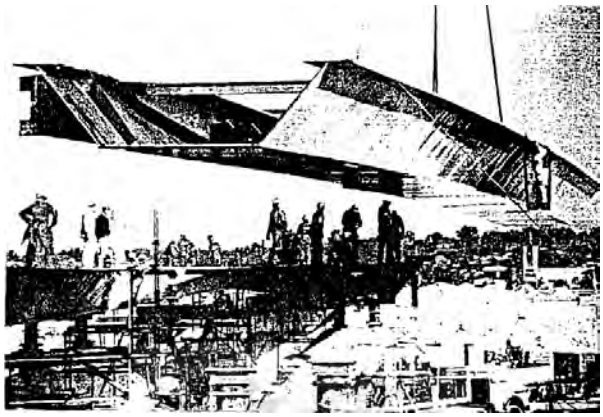

Figure 12 - Large Girder Element being handled by Single 225t Crawler Crane

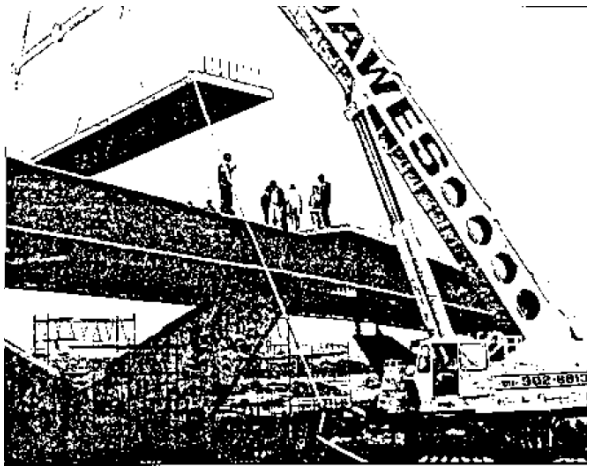

Figure 13 - Precast Concrete Deck Planks were placed with Minimal Disruption to Traffic on the Freeway

DYNAMICS

From a dynamic point of view the deck exhibits enhanced dynamic behavior, which needed to be properly taken into account, owing to a very slender deck associated with a relatively lightweight structure.

Design Phase

Due to the high slenderness of the bridge, particular attention was already paid to its dynamic behavior.

Therefore, it was aimed in design to keep the natural frequencies of the bridge out of the range where wind excitation could be a problem, and also so that the human perception or discomfort to vibrations would be minimal, or, at least, acceptable. Unfortunately, at the time the dynamic recommendations relative to bridges, especially the ones incorporating pedestrians' traffic, were very simplistic and were more directed to pedestrian bridges than to mixed usage of pedestrians and vehicular traffic.

Thus, the 1.st natural frequency of the bridge, which happened to occur in the vertical direction, was tried to be kept above 3.0 Hz. The horizontal vibrations did not prove to be of concern, given the much higher stiffness of the bridge in the horizontal direction, for which the concrete deck acts as a very rigid diaphragm.

In a dynamic analysis of a preliminary design the natural vertical frequency of the bridge was found to be too low, around 1.8 Hz, and it was decided to use double bearings under the steel troughs transverse diaphragms, as well as to strengthen the diaphragms to take better advantage of their stiffening influence on the structure, in particular owing to the strong skew according to which they are oriented, and it was further decided to make the concrete barriers/parapets integral with the deck, additionally, to avoid cracking in the long continuous balustrade, to pre-tension them axially with adherent cables of 4 x 12.5 mm strands.

Through the accumulation of all the modifications made to the preliminary design, it was possible to achieve a final natural frequency for the structure of about 5.5 Hz, thus fulfilling the proposed vibrational requisites.

Experimental Campaigns for Measuring Vibrations

Right after the completion of construction and before opening the structure to traffic, in October 1990, the Witwatersrand University in Johannesburg (Wits) was commissioned by the Transvaal Provincial Administration (TPA) to conduct a series of tests to monitor the long term static behavior of the bridge deck, including the effects of concrete creep and shrinkage, temperature and deck deformations during construction. These measurements were extended by Dr. G. Krige to include preliminary dynamic measurements.

About three years later after construction, the Rand Afrikaans University, later incorporated in the University of Johannesburg, took the initiative of undertaking a dynamic evaluation of the bridge, in order to establish some possible implications of the present type of design.

Results:

- Measured fundamental frequencies: in the range of 2.5 Hz to 3.2 Hz, with average of 2.78 Hz;
- Accelerations: 1.3 m/s^2 (4.27 ft/s^2 = 0.13 g) to 3.7 m/s^2 (12.14 ft/s^2 = 0.38 g) for accelerometers in the mid-span;
- Damping: was determined to be in the region of 2.7% to 4.4% of critical damping.

As seen, the measured natural frequencies were conforming with present AASHTO recommendations of a minimum of 3.0 Hz. Although the minimum vibration frequencies come out a bit low, the measured accelerations, which are the really important parameter to measure pedestrian comfort, according to the SETRA criteria, still fall within tolerable levels of comfort for the passage of trucks on the bridge.

The measured accelerations, were measured somewhat higher than the desirable 0.10 g to about 0.4 g in the critical spots (mid-points of the central spans). While for 0.10 g (1.3 m/s^2) we would still be in the region of Min. comfort (see Fig. 14), for 0.4 g (3.7 m/s^2) we are already somewhat into the uncomfortable zone.

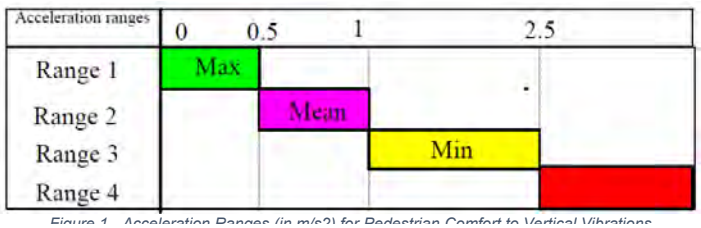

Figure 14 - Acceleration Ranges (in m/s2) for Pedestrian Comfort to Vertical Vibrations according to SETRA

Note: SETRA is the French Authority for Technical Studies of Roads and Highways.

The bridge is located between traffic lights and upon the green signal, traffic is released to pass over the bridge at high density and low speed. The frequencies thus imposed are of the same order as the natural frequencies of the structure and this explains the pronounced effect of heavy slow-moving trucks which can be felt, although without feeling concern, by standing at mid span.

Imposed Frequencies by Passing Vehicles (Hz)					
Speed		**Spacing between vehicles**			
(km/h)	(mph)	2.0 s	1.5 s	1.0 s	0.5 s
120	75.0	0.60	0.73	---	---
60	37.5	1.05	1.67	1.86	---
30	18.8	1.84	2.29	3.01	4.36
15	9.4	3.00	3.56	4.36	5.65

Figure 15 - Excitation Frequencies exerted by Traffic (Hz)

Above in Fig. 15 a table is presented, where a correlation was made between the velocities and spacing of 5.0 m (16.4 ft) long vehicles (between axles) with the resulting imposed frequencies, while driving over a bridge with 40 m long spans, where the critical frequencies were highlighted in orange:

As can be seen, for this particular situation, even if the natural frequencies were above 4.0 Hz, or even 5.0 Hz, the bridge would still be excited by the slow-moving traffic leaving the traffic light after being stopped.

With nowadays availability of sophisticated analysis software and powerful computation resources, a dynamic time step analysis for moving vehicles on a 3-D model could have been done and this situation possibly identified. However, given all the existing constraints those same would still not be easy to overcome, unless by making the steel structure much stiffer by increasing the thicknesses of the flanges of the steel troughs, at the cost of significant extra weight.

At present there is much more guidance regarding the perception by humans of vibrations and the resulting accelerations of structures on which they might be standing and the author recommends, in addition to the SETRA recommendations, the provisions in ISO 2631 and 10137, associated with a dynamic vehicle analysis on a 3-D model of the structure, covering the possible different conditions of traffic movement.

As for the calculated damping, the results came in line with what could be expected, which was assumed to be of the order of 2% to 3% of critical, to which might have added the beneficial effect of the asphalt overlay.

In conclusion, in spite of being very light and slender, the Bothasfontein bridge would still marginally satisfy pedestrian comfort requirements in today's terms for normal speeds and densities of traffic, and marginally fall in the uncomfortable zone for dense low speed conditions of traffic.

COMPARISON WITH INTERNACIONAL PRACTICE

The type of structure selected – concrete deck on steel girders – although at the time of design commonly used in Europe and the United States, had very seldomly been used in the R.S.A.

In fact, only 4 such structures were found in the search carried out by the author, of which only one of them carrying vehicular traffic, in the form of a double-decker urban viaduct in the city of Johannesburg.

Therefore, giving the novelty in South Africa at that time, it was just natural and prudent to look for international examples to compare with the present design and check whether the design parameters were in the previously used ranges of values.

Coincidentally, the author had come across a survey conducted in Europe, the United States and Japan, which covered 82 structures of the box girder composite steel and concrete type, in which ranges or trends for the main parameters were identified.

The parameters for the comparison basis were identified as (numbering in accordance with table below):

1. Area of boxes in relation to the controlling span;
2. Depth-to-span ratio;
3. Ratio of box depth to bottom flange width;
4. Ratio of bottom of flange width to its thickness;
5. Concrete slab thickness;
6. Bridge weight per unit area of deck.
7. Area of tension bottom flanges;
8. Inverse of spacing of diaphragms.

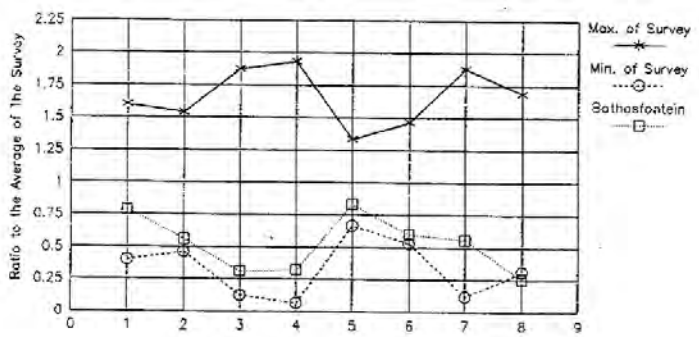

Figure 16 - Composite Bridges of Steel and Concrete - Curved and Skew Box Girders Results from Survey

The comparison made can be summarized in the graph above (Fig. 16) where it can be seen how the Bothasfontein bridge fits within the ranges of variations that were reported, lying significantly below the average values, which is a fact that inspires a certain confidence in the design, not only from a safety point of view, but also considering the economic factor.

It must also be noted that the structures surveyed were mainly constructed between 1965 and 1976 and, therefore, some reduction on the structural dimensions were to be expected on more recent structures owing to improvements in construction technologies, materials and computation means.

CONCLUSION

The bridge at the Bothasfontein interchange, designed and constructed in the Republic of South Africa in 1990 was a precursor in today's approach to design and construction that we conventionally call ABC, or Accelerated Bridge Construction, and, indeed, this design of almost 3 decades ago, would quite fit as a good example in today's practice.

For me, my senior supervisor and senior partner of VKE – Mr. Marthinus Rautenbach – and the whole design team, the design of this structure and its construction with our dedicated technical support to the site, was an exciting endeavor that has left a mark for the rest of our professional lives.

In our opinion, in spite of a possible better dynamic behavior, owing to the limited computational resources back then, it was well deserved the two professional awards given to this structure: SAICE's (South African Institute of Civil Engineers) **Award for the Most Outstanding Civil Engineering Achievement for 1991**, and the SAISC (South African Institute of Steel Construction) **Winner 1990 Steel Construction Awards**.

BEHAVIOR OF UHPC COLUMNS SUBJECTED TO COMBINED AXIAL AND LATERAL LOADING

Mahmoud Aboukifa, Ph.D. Student, University of Nevada, Reno, (775)301-2370, Email: maboukifa@nevada.unr.edu
Mohamed Moustafa, Ph.D., P.E., University of Nevada, Reno, (775)682-7919, Email: mmoustafa@unr.edu
Ahmad Itani, Ph.D., P.E., S.E., University of Nevada, Reno, (775)682-7919, Email: itani@unr.edu

INTRODUCTION

Ultra High Performance Concrete (UHPC) is a versatile building material as it is characterized by very high compressive strengths reaching 200 MPa (30 ksi), ductile tensile characteristics, and energy absorption. However, this material is not widely used due to the lack of full understanding of the mechanical and structural behavior and its failure mechanism. Currently, UHPC is commonly used in limited-scale applications, such as joints and connections between precast structural elements. There is still a great potential for application of UHPC in full structural elements, e.g. slender and highly stressed compression members of high rise buildings, industrial buildings, and members with high durability requirements, e.g. bridge columns or structures in aggressive environmental conditions. This study aims at experimentally studying the seismic behavior of four UHPC columns. Four large-scale UHPC columns were tested under axial and quasi-static cyclic lateral loading at the Earthquake Engineering Laboratory at the University of Nevada, Reno. The experimented variables were the reinforcement bars grade, transverse reinforcement ratio and longitudinal reinforcement ratio. The lateral response of these columns is evaluated for damage progression, failure type, peak strength, displacement ductility and steel reinforcement strains. To establish a comparison with conventional columns with grade 60 bars, a normal strength concrete (NSC) column with same dimensions and design as the tested UHPC column is analytically modeled and analyzed under similar loading protocol using OpenSEES. The experimental response of the UHPC column is evaluated and compared to the analytical response of the NSC column with respect to their Force-Drift and Moment-Curvature relationships.

METHODS

To accomplish the objectives of this study, Four UHPC column of the same dimensions and could be considered a 1/5 scale of NSC column used in the California department of transportation Academy Bridge. The specimens' dimensions, as shown in Figure 1, were 58 in and 10 in for the height and the diameter, respectively. The test matrix is shown in Table 1. The test matrix consists of two groups. The first group consists of an analytically investigated NSC column and an experimentally tested UHPC column reinforced with Grade 60 longitudinal bars, this group was intended to mainly investigate the difference in the damage behavior and flexural capacity between the UHPC and NSC column. The second group consisted of three UHPC columns reinforced with Grade 100 high strength steel (HSS) longitudinal rebars of different longitudinal and transverse steel ratios. The variation within this group aimed to investigate the difference in behavior between the Grade 100 and Grade 60 reinforced UHPC columns and to investigate the effect of confinement effect and longitudinal steel ratio. The footing was designed to be capacity protected and consisted of two parts: an UHPC inner part connected to the UHPC column to ensure the continuity of UHPC in the plastic hinge region, and a NSC footing. The plan dimensions were 2×2 ft2 for UHPC and external dimensions of 5×5 ft2 for NSC and both parts were 14 in. deep as illustrated in Figure 1. A cantilever configuration setup was used to test the column as shown in Figure 2. Displacement-controlled slow cyclic loading was applied to the column using a 110-kip servo-hydraulic actuator and the cyclic loading protocol was adopted from FEMA 461 (FEMA 2007) is used where every applied drift cycle is a ratio of the column drift ratio at which the first longitudinal rebar yield. Two full cycles were applied at drift ratios of 0.17%, 0.24%, 0.34%, 0.48%, 0.69%, 0.97%, 1.38%, 1.93%, 2.76%, 3.86%, 5.52%, 7.72% and 10.83% to capture the seismic response of the columns under different levels of drift ratios for different limit states including failure. Figure 3 shows a typical damage for the tested UHPC column at the maximum drift

ratio cycle causing column failure. Figure 4 shows the measured hysteresis loops for the UHPC column and the NSC column reinforced with grade 60 longitudinal bars.

From the experimental study, the observed mode of failure for all the UHPC columns was the tensile fracture of longitudinal bars without any cover spalling, longitudinal bars exposure or buckling. The UHPC columns showed adequate ductile response. the drift capacities of the experimented specimens, which is defined to be the lesser of the ultimate drift ratio and the measured drift ratio after 20% drop of the maximum lateral load capacity, were 9.62%, 10.84%, 8.34%, 7.72% and 7.43% for specimens S0, S1, S2, S3 and S4, respectively. Figure 5 shows the average backbone curves for the push and pull directions for specimens S0 through S4. Table 2 shows the average lateral load and drift capacities of the experimented specimens. The UHPC column with grade 60 longitudinal bars showed a lateral load capacity of 2.15 times that of NSC column. UHPC column with Grade 100 longitudinal bars instead of Grade 60 bars showed 25% increase in the lateral load capacity of the column but experienced 23% decrease in the drift capacity. Decreasing the UHPC column confinement by decreasing the transverse reinforcement ratio by 50% has led to an insignificant decrease of only 4% in the lateral load capacity of the column and 7% decrease in the drift capacity. The UHPC column with 1.5% longitudinal steel ratio of Grade 100 bars was observed to have almost the same lateral load capacity as the UHPC column with 2.4% longitudinal steel ratio of Grade 60 bars, but with almost 30% decrease in the drift capacity.

CONCLUSIONS

Based on the experimental testing of the UHPC columns and the analytical investigation of the NSC column, the results indicted the following conclusions:

- For the large-scale column tests, the main observed mode of failure for all tested UHPC columns was tensile rupture of the longitudinal rebars without concrete spalling, core damage, reinforcement exposure, or buckling as in a typical NSC column plastic hinge.
- In all of the tested UHPC columns, no cracks were observed until the columns reached 1% drift ratio. Concrete crushing in compression was ultimately observed at large drift ratios but without leading to any significant spalling or loss of the concrete section.
- The UHPC column with Grade 60 rebars showed an adequate ductile behavior with the displacement and curvature ductility found to be 8.4 and 15.4, respectively. These values are comparable to well-designed conventional reinforced concrete seismic columns in high seismic areas.
- In all of the tested UHPC columns, the measured strains in the transverse reinforcement within the plastic hinge region were found to be smaller than 0.1% which indicates insignificant activation of the confinement in the UHPC columns under the combined 5% axial and lateral cyclic loading.
- Overall, the use of UHPC of compressive strength that is almost 6 times that of NSC in addition to superior tensile behavior that results from using 2% steel fibers can lead to an 115% increase in the lateral load capacity and 11% increase in drift or displacement capacity.
- Using Gr 100 HSS rebars instead of Gr 60 rebars with the same longitudinal reinforcement ratio can lead to a 25% increase in the lateral load capacity. This increase when combined with the effect of using UHPC instead of NSC can result in more than double the capacity, which sets the stage for new design opportunities for compact bridge columns.
- Decreasing the transverse reinforcement ratio by half in the UHPC columns resulted in only 4% decrease in the lateral load capacity and 8% decrease in the maximum drift ratio. This confirms that confinement effects in UHPC columns under combined axial and bending might not be as pronounced as the cases of pure axial or applications of high axial loads.

Table 1: Test Matrix

Specimen		Longitudinal Reinforcement		Transverse Reinforcement		Tested Variable	Type of Testing
		#	%A_g	#	%A_g		
Group I (Gr. 60)	S0	6#5	2.37%	#3@2in	1.1%	NSC	Analytical
	S1	6#5	2.37%	#3@2in	1.1%	UHPC vs NSC	Experimental
Group II (Gr. 100)*	S2	6#5	2.37%	#3@2in	1.1%	Gr 100 vs Gr 60	Experimental
	S3	6#5	2.37%	#3@4in	0.55%	Low confinement	Experimental
	S4	6#4	1.53%	#3@2in	1.1%	Low long. steel ratio	Experimental

* Gr. 100 is for the Longitudinal reinforcement only in Group II specimens.

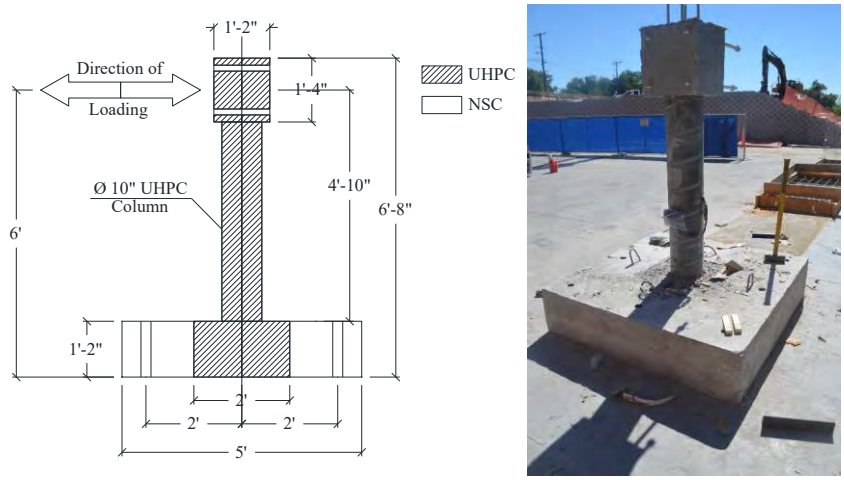

Figure 1: Experimental tested UHPC column dimensions.

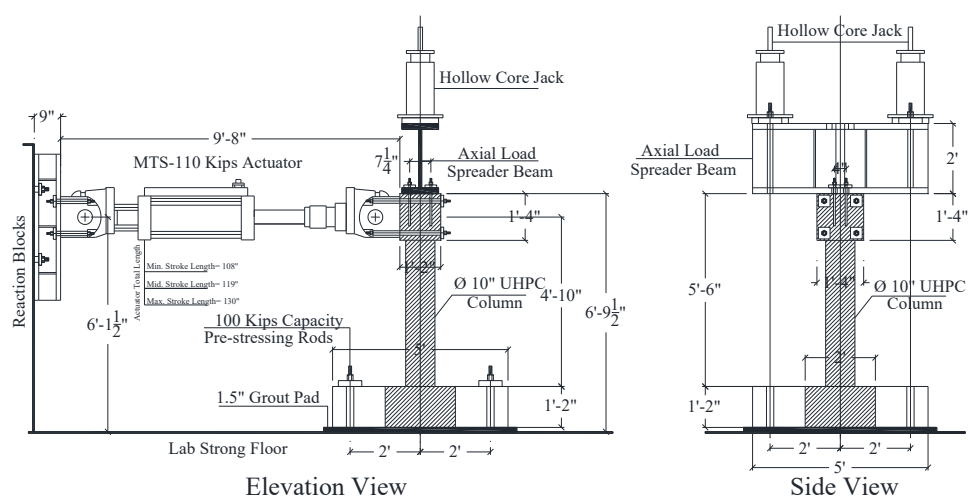

Figure 2: Test Setup for UHPC column under combined axial and bending.

Figure 3: Damage state of UHPC column at 10.83% drift ratio cycle.

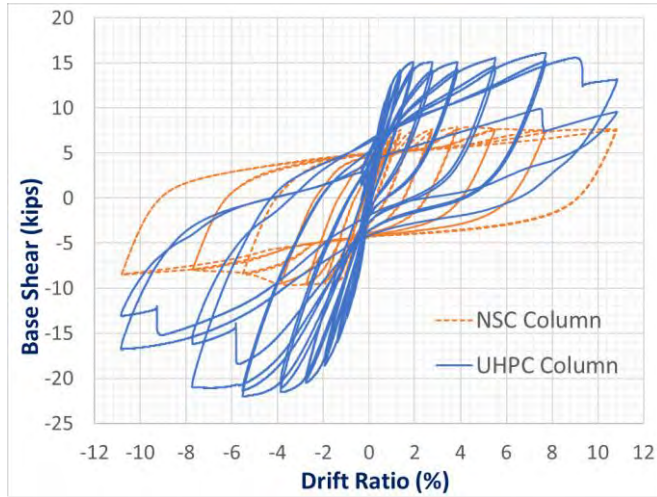

Figure 4: Force-drift hysteretic response of UHPC versus NSC columns.

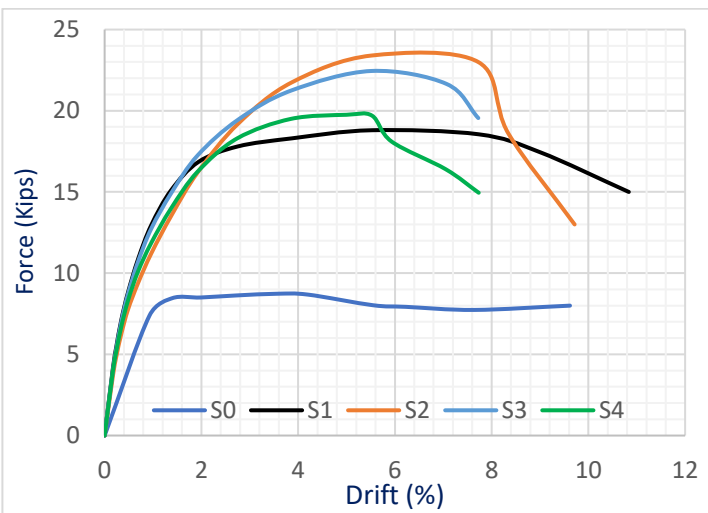

Figure 5: Average force-drift backbone envelopes.

Table 2: Test results summary

	P_{max} (kips)	Drift Capacity (%)
S0	10.44	9.62
S1	18.80	10.83
S2	23.40	8.34
S3	22.45	7.72
S4	19.75	7.43

ACKNOWLEDGMENTS

This project was supported by the Accelerated Bridge Construction University Transportation Center (ABC-UTC) at Florida International University (FIU), as lead institution, and Iowa State University (ISU) and the University of Nevada-Reno (UNR) as partner institutions. The authors would like to acknowledge the ABC-UTC support, and the UHPC donation provided by Ductal®, a LafargeHolcim technology.

REFERENCES

Aboukifa, M., Moustafa, M. A., Itani, A. M., & Naeimi, N. (2019). *Durable UHPC Columns with High-Strength Steel* (No. ABC-UTC-2013-C3-UNR02-Final). Accelerated Bridge Construction University Transportation Center (ABC-UTC).

Aboukifa, M., Moustafa, M. A., & Itani, A. M. (2019). “Behavior of UHPC Column Subjected to Combined Axial and Lateral Loading”. 2nd International Interactive Symposium on UHPC, June 2019, Albany, NY, USA, 155.

A FRAMEWORK TO QUANTIFY THE CUMULATIVE DAMAGE DUE TO INDUCED SEISMICITY

Philip Scott Harvey Jr., Ph.D., P.E., University of Oklahoma, (405) 325-3836, harvey@ou.edu;
Sumangali Sivakumaran, University of Oklahoma, n/a, sumangali@ou.edu;
Kanthasamy K. Muraleetharan, Ph.D., P.E., G.E., University of Oklahoma, (405) 325-4247, muralee@ou.edu

ABSTRACT

A framework for assessing the potential for cumulative damage on bridges due to a large number of small-to-moderate induced earthquakes is presented. The method is based on rainflow counting per the ASTM standard practice for cycle counting in fatigue. A quantitative measure – Fatigue Damage Index (FDI) – is proposed and developed using Miner's Rule to identify the accumulated damage in the bridge, from which the remaining service life can be estimated. The FDI can also be used to predict when accelerated repairs may be required and to evaluate accelerated retrofit solutions.

INTRODUCTION

States such as Oklahoma, Texas, Kansas and Arkansas historically have experienced only one or two tectonic earthquakes annually prior to 2009, but these states are now experiencing earthquakes at an increased rate due to induced seismicity; see Figure 1(a). Consequently, State Departments of Transportation (DOTs) are concerned about how their bridges, which were originally designed for low seismic design loads, will handle this increased seismic demand (1). While a structural collapse is unlikely for an induced earthquake (2,3), cumulative effects of large number of small induced earthquakes compounded with an occasional moderate earthquake may lead to damages negatively impacting the safety of the traveling public and the flow of the transportation network. This research addresses the knowledge gap on the effects of low-level frequent earthquakes on the bridges and proposes a framework to assess the cumulative damage on bridges. In the following section, the framework is presented, along with a demonstration of its use in Oklahoma.

THE THEORETICAL FRAMEWORK

The proposed framework aims to evaluate the potential for cumulative damage (high-cycle fatigue) in bridges caused by many small-to-moderate induced earthquakes. To this end, the framework characterizes the cumulative cyclic demand on a structure for a desired set of ground motion data and compares the demand against the capacity of the structure to assess the likelihood of fatigue. A new metric, the *fatigue damage index* (FDI), is used to quantify the proportion of the fatigue life that is accumulated and can estimate the remaining service life of the structure. The FDI framework is illustrated in Figure 2 and is comprised of six steps described in the following sections.

Step 1 – Mathematical Model of the Bridge

The first step of the FDI framework is to develop a mathematical model of the bridge of interest—either a "typical" bridge or a specific bridge. This model is used to determine the natural modes of vibration for the structure. Assuming that the structure has two axes of symmetry subjected to bi-directional horizontal GM along these axes, then the modal responses in the longitudinal and transverse directions can be treated independently. Furthermore, it is assumed that a single (fundamental) mode in each direction of response is sufficient. The natural period T_m in either direction can be determined by either some approximate method or modal analysis. To this end, the model may be quite simple or very detailed, depending on the application.

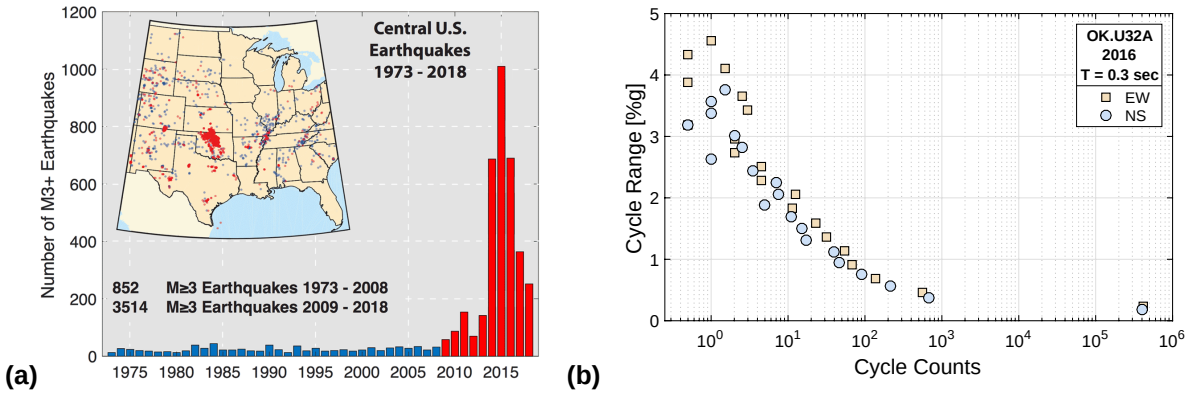

Figure 1: (a) Annual number of earthquakes with a magnitude of 3.0 or larger in the central and eastern United States, 1970–2016. Source: USGS (4). (b) Pseudo-acceleration cycles for the response of simple harmonic oscillator (ζ=5%) with period T = 0.3 s subject to the EW and NS components of all the ground-motion accelerations measured at station OK.U32A in 2016.

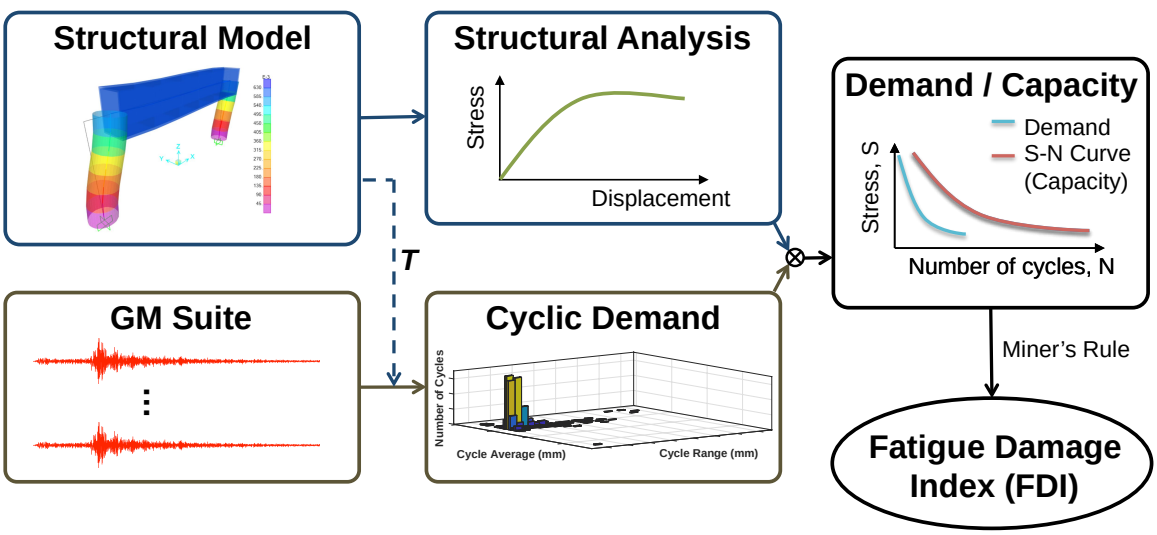

Figure 2: Framework for calculating the Fatigue Damage Index (FDI).

Step 2 – Compile Ground-Motion Data

The next step is to compile and organize a sequence of ground motions (GMs) impacting the bridge during the time frame of interest (e.g., one calendar year) and in the desired range of earthquake magnitudes (e.g., greater than some threshold). The GM sequence S is composed of N bi-directional (EW and NS) horizontal GMs. Because GM measurements are taken at seismic stations that are most likely not collocated with the bridge of interest, seismic stations should be selected to be roughly representative of the seismic hazard at the bridge's actual site.

Step 3 – Characterize the Cyclic Seismic Demand

To quantify the cyclic seismic demand, simple harmonic oscillators representative of the bridge are subjected to the sequence S of earthquake ground motions acquired in Step 2. For each oscillator, the displacement response is computed independently for the two components of horizontal GM (EW and NS). The cyclic seismic demand is characterized in terms of cycle counts at set of displacement cycle ranges (denoted D_k) using the rainflow counting algorithm (5). The displacement cycle counts are converted to pseudo-acceleration cycle counts (Figure 1(b)) by the relationship $A_k = (2\pi/T_m)^2 \times D_k$. Cycle

counts in the EW and NS directions are combined by taking the square root of the sum of their squares (SRSS).

Step 4 – Structural Analysis for Earthquake Loading

In this step, the pseudo-acceleration cycle ranges A_k are related to stresses at certain locations in the bridge deemed critical. Equivalent static earthquake loading are determined using one of the two single-mode methods of analysis per AASHTO (i.e., single-mode spectral method or uniform load method), where A_k/g replaces the elastic seismic response coefficient, C_{sm}. From the ensuing analysis, the seismic force effects at each pseudo-acceleration cycle range A_k are related to stress cycle ranges f_k within the bridge.

Step 5 – Demand-to-Capacity Analysis

In this step, the demand on and capacity of the bridge are combined with one another to determine the potential for fatigue. The demand is characterized by the stress cycle counts and ranges determined in Step 4. The capacity of the particular structural element of interest is characterized by the material's S-N curve. An S-N curve represents number of cycles to failure at each cyclic stress level for a given material and is specific to the test configuration used in fitting the curve. One must identify appropriate S-N curves for the material based on the *in situ* loading conditions. To compare the demand and capacity, Miner's rule (6) is used: $C = \sum(n_k/N_k)$ where C is the damage fraction and n_k (demand) and N_k (capacity) are the number of cycles at stress range f_k. Damage fractions in the longitudinal (C_l) and transverse (C_t) directions are combined using SRSS to give the *fatigue damage index*, FDI = $(C_l^2 + C_t^2)^{1/2}$.

CONCLUSIONS

In this paper, a quantitative measure (FDI) and a framework for its application were presented. The method uses Miner's Rule to identify the potential for accumulated damage in a bridge caused by a large number of induced earthquakes, from which the remaining service life can be estimated. The FDI can also be used to predict when accelerated repairs may be required and to evaluate accelerated retrofit solutions.

ACKNOWLEDGEMENT

This material is based upon work supported by the Accelerated Bridge Construction University Transportation Center (ABC-UTC). This support is greatly appreciated.

REFERENCES

1. Harvey, Jr., P.S., Heinrich, S.K., Muraleetharan, K.K. (2018), "A framework for post-earthquake response planning in emerging seismic regions: An Oklahoma case study," *Earthquake Spectra* **34**(2): 503–525. doi: 10.1193/053117EQS100M
2. Harvey, Jr., P.S., Kaid Bay Cortez, I.A., Heinrich, S.K. (2018), "Response of a typical Oklahoma bridge to the September 3, 2016, 5.8-magnitude earthquake near Pawnee, Oklahoma," *Journal of Bridge Engineering* **23**(2): 04017130. doi: 10.1061/(ASCE)BE.1943-5592.0001178
3. Chase, R.E., Liel, A.B., Luco, N., Baird, B.W. (2019), "Seismic loss and damage in light-frame wood buildings from sequences of induced earthquakes," *Earthquake Engineering & Structural Dynamics* **48**(12): 1365–1383. doi: 10.1002/eqe.3189
4. USGS (2019), "Induced Earthquakes," *Earthquake Hazards Program*, U.S. Geological Survey, URL https://earthquake.usgs.gov/research/induced/overview.php, accessed October 10, 2019.
5. ASTM E1049-85 (2017), "Standard Practices for Cycle Counting in Fatigue Analysis." ASTM International.
6. Miner, M.A. (1945), "Cumulative Fatigue Damage," *Journal of Applied Mechanics* **12**: A159–A164.

SUPERSTRUCTURE REPLACEMENT OF ROUTE 676 BRIDGES OVER NORTH BRANCH OF NEWTON CREEK UTILIZING ACCELERATED BRIDGE CONSTRUCTION

Presenting Author: Matthew Alboum, M.S., P.E., Assistant Department Manager, Bridge Structures, Dewberry Engineers Inc., 973-780-1874, MALBOUM@Dewberry.com

Co-Author: Erica Parriott, M.S., E.I.T., Staff Engineer
Dewberry Engineers Inc., 973-780-9217, EPARRIOTT@Dewberry.com

INTRODUCTION

In the spring of 2019 Dewberry Engineers Inc. (Dewberry) completed a $6,780,000 federally funded project for the New Jersey Department of Transportation (NJDOT) utilizing accelerated bridge construction techniques for a bridge superstructure replacement.

The bridges carry an estimated 81,000 vehicles per day over the North Branch of Newton Creek. Due to the high traffic volume NJDOT required that all lanes of traffic remain open during rush hour and specified that a minimum number of lanes be maintained throughout non-peak hours.

EXISTING CONDITIONS

The circa 1954 bridges were 80' long single span. The SB structure was listed in the bridge inspection report as "Structurally Deficient" due to the poor condition of the deck, and the deck of the NB structure was rated in fair condition.

The existing superstructure was comprised of rolled steel beams with welded cover plates on the bottom flanges and a 7.5" thick composite reinforced concrete deck slab. Both bridge superstructures were supported by common reinforced concrete full height abutments founded on timber piles. There were U-shaped wingwalls on the outside of the roadway, with elephant ear sections that followed the existing ground elevation. The abutments were constructed with no skew on the southbound structure and with a skew of approximately 4º on the northbound structure. The existing structures each had a curb-to-curb width of 64'-0" and an overall width of 70'-0". The bridge cross section consisted of four 12 foot lanes, a 3 foot left shoulder and an 11 foot right shoulder. The northbound roadway followed a curve horizontal alignment with a radius of 3,982 feet. However, the beams were tangent with varying overhang widths. The southbound roadway was tangent. The North Branch of Newton Creek is a tidal waterway, and the existing structure had a freeboard of 6.5' based on the mean high water level.

PROPOSED CONDITIONS

Dewberry was selected as the design consultant for the Final Design phase of this project. The project met the requirements for NJDOT's Limited Scope Concept Development (LSCD) Process, and therefore was able to graduate directly from the Concept Development Process into Final Design.

Concept development Preliminary Preferred Alternative (PPA)

The original project scope developed during the concept development phase was to replace the deteriorated deck with prefabricated deck slabs during weekend closures starting at 9:00 pm on Friday and ending by 6:00 am on Monday, giving the contractor a total of 57 hours per closure.

Through extensive research and coordination with contractors and fabricators the required duration for each construction activity was calculated. Each activity was modeled into the overall construction schedule, which resulted in an overall duration that would greatly exceed the allowable closure. Therefore, it was determined that a deck replacement utilizing precast deck panels was not feasible during the allowable closure window, and additional alternatives were investigated.

Dewberry Modifications to the Preliminary Preferred Alternative (PPA)

Dewberry performed an alternative analysis to investigate additional feasible alternatives. These alternatives included conventional construction with long term closures, and a full superstructure replacement utilizing Prefabricated Superstructure Elements (PSU's) and other accelerated bridge construction (ABC) details to replace the existing bearings and approach slabs.

Based on the results of the analysis it was determined that the design would utilize a combination of ABC and conventional construction details to replace the superstructure, bearings, and approach slabs during the weekend closures, and the bridge parapets and wing walls under long term closures of the shoulders.

Design Considerations

The proposed bridge geometry was set to match the existing geometry to avoid fit-up issues with the existing abutments supporting the replacement superstructure, and avoid the need for widening the substructure. The existing low chord elevation was held, which allowed for the hydraulic opening to remain unchanged.

As part of the design process, Dewberry consulted PSU fabricators to ensure that the proposed units were constructible, transportable, and erectable. In addition, special consideration was given to the construction loading conditions. The deck was designed to carry traffic loading before and after the joint was constructed to accommodate the traffic staging. Added complexity due of the varying girder spacing required a more refined analysis to check the capacity of the beam, and determine the deflection and camber values accurately. The existing abutments and timber piles were analyzed to ensure they would be able to resist the increased loading, and Dewberry found that they would have sufficient capacity.

Accelerated Bridge Construction (ABC) Details

In order to ensure the required work could be completed within the allowable weekend closure window multiple ABC details were incorporated into the design. These included the use of PSU's, precast approach slabs, and precast bolsters to support the elastomeric bearings. The precast approach slabs selected were a proprietary system called Superslab ® designed and fabricated by Fort Miller. Since they were the only fabricator of this type of system a sole source waiver was required by FHWA. Dewberry specified a modified backwall detail to limit the amount of demolition and re-construction required, and avoid the need for temporary sheeting along the stage lines. The top portion of the backwall was saw cut and removed. A non-shrink grout pad was poured directly onto the saw cut, and a neoprene pad was placed. The approach slab sat directly on this pad, and was doweled into the existing backwall.

The existing rocker bearings were replaced with elastomeric bearings. Due to the reduced bearing depth of the proposed elastomeric bearings there was a height differential between the existing bridge seat and the masonry plate of the bearing. In order to reduce construction time, precast bolsters were fabricated to sit on the existing abutment seats to make up the height differential. The bolsters were set on grout pads to level the existing bridge seat. Holes were core drilled into the existing bridge seat, and fabricated into the precast bolsters to allow for anchor bolts to be grouted into the seat and bolster. These details minimized the need for timely bridge seat reconstruction.

Dewberry evaluated multiple connection details for the joint connecting the PSUs. For this project, NJDOT required that ultra-high performance concrete (UHPC) be used as the joint filler. Dewberry consulted with UHPC manufactures to determine the connection detail, as well as the specific requirements for the UHPC mix design to specify a mix capable of the required cure durations.

Conventional Construction Details

Dewberry determined that conventional construction practices could be utilized for specific components of the project, that would aide to minimize project costs and still meet the overall project schedule and client expectations. Therefore conventional construction activities were performed both before and after the weekend closures. These activities included repairing the existing abutment stems, installation of the ITS conduits, construction of the bridge parapets, demolition of the existing wing walls, reconstruction of the wingwalls and parapets on the wing walls, and the construction of the pylon on the wing walls for the guiderail attachments. This work was done in long term shoulder closures, or completed without the need for lane closures. Additionally longitudinal diamond grinding was performed during nighttime closures once all of the replacements were completed.

CONSTRUCTABILITY ANALYSIS

As part of the design process Dewberry performed a detailed and thorough construability analysis of the proposed construction. This included the review of the construction schedule performed as part of the alternatives analysis to ensure it was feasible to complete the proposed work within the allowable closure window. Additionally, close coordination with fabricators, designers of proprietary elements, equipment manufactures, and contractors was required to ensure the availability, feasibility, constructability of the ABC elements. In addition, Dewberry performed a detailed analysis of the required demolition and installation/erection to ensure that the work could be completed within the allowable work zones and anticipated timeframes.

CONSTRUCTION

In October 2017, South State Inc. (SSI) of Bridgeton, NJ was awarded the construction contract for the project, with an overall bid for the work of approximately $6,780,000. Due to lane closure restrictions, and the fabrication lead times, the weekend closures were tentatively scheduled for Fall of 2018. Dewberry and SSI worked through the working drawing review process to ensure that all of the prefabricated components were properly fabricated to ensure no issues during the weekend closures as required by the contract documents.

SSI also identified and performed all the construction activities that could be performed prior to the weekend closures including any locations where the proposed anchor bolts did not conflict with the existing bearings, and pre-drilled the anchor bolts to reduce the duration during the weekend closures.

As construction progressed and approached the point in the schedule to start the weekend closures, information regarding the closures was disseminated to the public through a number of sources to provide ample notice to the traveling public of the upcoming closure. SSI scheduled the work to be completed over 4 weekend closures. Each weekend approximately half of each structure was replaced, in order to maintain one to two lanes throughout the weekend closures.

Starting Friday September 14th 2018, SSI initiated the first weekend closure with the re-placement of the stage 1 portion of the NB structure, and was able to successfully open the bridge to traffic by Monday morning when required by contract. This was repeated for the next three consecutive weekends to complete the remaining work. With each weekend closure SSI became more efficient, and was able to successfully open the bridge to traffic by Monday morning.

After the four weekend closures were completed, the work shifted to the conventional construction. The contractor was able to perform and complete this work in the Fall of 2018 bringing the project to substantial completion by December.

PROJECT CONCLUSIONS

Many factors contributed to the success of this project:

- Thorough constructability analysis completed in the early stages planning is critical to minimize risk.
- Modifications to the PPA allowed the contractor to complete construction within allowable closure windows.
- The selective use of ABC techniques balanced the overall project cost and schedule to meet the client's expectations and project objectives while minimizing disruptions to traveling public and surrounding communities.
- Sufficient advance notice through the use of different media was provided to inform the traveling public of the upcoming weekend closures. This allowed the public to use alternative routes and avoid the area during closures and reduced the volume of traffic traveling through the site.

These factors resulted in a new superstructure that will extend the service life of this structure for NJDOT.

SUPERSTRUCTURE REPLACEMENT OF WINTHROP ROAD UNDERPASS IN 45 DAYS USING PRECAST CONCRETE AND ULTRA-HIGH PERFORMANCE CONCRETE

Gordon Edington, PE, VHB, (207)889-3144, gedington@vhb.com
Andrew Prezioso, PE, VHB, (401)457-2053, aprezioso@vhb.com
William Rauseo, PE, VHB, (401)457-2062, wrauseo@vhb.com

ABSTRACT

The Winthrop Road Bridge over Interstate 95 in Hallowell, Maine, is a 2-lane, 4-span continuous steel superstructure that required replacement due to inadequate flexural strength and insufficient vertical clearance. After conducting user cost analyses, it was determined that closing the bridge and using accelerated bridge construction (ABC) was the most economical construction method. Incorporating precast deck panels, precast pier cap extensions, precast approach slabs, and ultra-high performance concrete (UHPC) deck closure pours into the design allowed for a successful superstructure replacement in a 45-day closure.

PROJECT BACKGROUND

The Winthrop Road Bridge is a 2-lane, 4-span continuous steel structure supported on three reinforced concrete hammerhead style piers that carries traffic over I-95 in Hallowell, Maine. The bridge is owned by the Maine Turnpike Authority (MTA), one of Maine's largest transportation agencies. Carrying about 6,500 cars per day, the 60-year-old bridge is a crucial connector between the rural part of town and downtown Hallowell. The bridge also serves as one of two connections between the residential areas in Winthrop and downtown Augusta. The route is used daily by commuters traveling to the state capital, including many employees of the Maine Department of Transportation.

The scope of the project included replacing the existing superstructure, increasing the vertical clearance, and performing substructure repairs. Due to limited cross-section geometry, closing the bridge and detouring traffic was the only efficient method for replacement. During the road closure, traffic was primarily detoured to Western Avenue, the other connection between Winthrop and Augusta. Western Avenue, a heavily commercialized area with multiple signalized intersections, was already near capacity during rush hour. Detouring many of the 6,500 cars to Western Avenue was expected to significantly impact traffic flow through the area. VHB performed several user cost analyses to capture the value of these impacts to the traveling public. The user cost analyses considered many factors, including anticipated delay times, duration of construction, number of passenger vehicles versus trucks that travel the route, and the Historical Consumer Price Index for All Urban Consumers (CPI-U). Based on those results and through discussions with the MTA and the Maine Department of Transportation, it was determined that the Winthrop Road Superstructure Replacement was an ideal candidate for accelerated bridge construction (ABC) to minimize traffic impacts.

The MTA required assurances built into the design, specifications, and construction methods since it was its first project using ABC techniques. Prior MTA projects with similar scopes of work were typically provided with a 150-day maximum roadway closure window to complete the work using conventional construction methods and materials. To minimize disruption to travelers, MTA wanted to shorten the roadway closure to a maximum of 55 days. VHB looked at several options to achieve the 55-day roadway closure goal, including the use of prefabricated bridge units (PBUs), a lateral slide installation, or the use of full-depth precast concrete deck panels on new steel girders. After reviewing the pros and cons of each alternative, VHB and MTA determined that the use of full-depth precast concrete deck panels would be the most cost-effective configuration for completing the superstructure replacement within the desired 55-day roadway closure. Additionally, the contractor was given a daily incentive if the bridge was opened in less than 55 days and corresponding disincentives if the closure extended beyond 55 days. The value of the incentives and disincentives was based, in part, on the user cost analyses that VHB completed during the preliminary phase of the project.

ACCELERATED BRIDGE COMPONENTS

To achieve substantial completion within the allowable 55-day closure, VHB designed and detailed several ABC elements and specified special materials such as precast pier cap extensions, full-depth precast concrete deck panels, UHPC deck closure pours, and precast approach slabs.

Precast Pier Caps

One of MTA's project requirements was to increase the vertical clearance of the existing bridge. The clearance over the highway was 14’-11”, and MTA required the new structure to achieve a minimum vertical clearance of 15’-6”. The new superstructure design could only decrease the depth of the superstructure by a few inches, so it became necessary to raise the entire superstructure. The substructure consisted of three reinforced concrete hammerhead piers founded on spread footings. These substructure units were found to be in good condition, and re-use of these piers proved to be instrumental in the short duration closure for the bridge replacement.

For the Winthrop Road Bridge, the use of precast pier cap extensions reduced the project schedule by as much as three weeks. On past similar conventional construction projects, the pier cap work typically required nearly a month to complete. Using conventional cast-in-place concrete, each of the three piers would have taken a week to 10 days to prepare the existing caps, form and place reinforcing steel, cast concrete, and allow the concrete to cure. For Winthrop Road, this element took only four days of the total closure window. Each precast pier cap extension was cast off-site and delivered to the project on the same evening it was to be installed. Each night, one of the precast pier cap extensions was placed using a crane in a temporary lane closure. On the fourth night, high-strength grout was placed at all the pier cap extensions to complete the work.

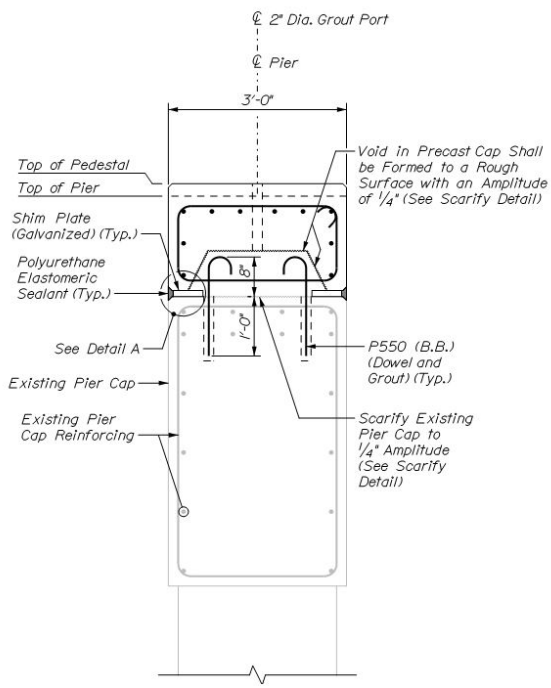

Figure 1: Precast pier cap section

Photo 1: Underside of precast pier cap extension

The pier cap extensions not only increased the vertical clearance beneath the bridge, but also added required strength to support the new superstructure and current HL-93 live loads.

Photo 2: Precast pier cap extension at fabricator

Photo 3: Precast pier cap extension after install

The existing pedestals were removed from the pier caps and the top of the cap was scarified. Dowel reinforcing bars were then drilled and grouted into the top of the existing pier cap to ensure that the new precast caps would act compositely with the existing pier cap. The precast pier caps were cast with a trapezoidal void on the underside so that they could accept the doweled reinforcing bars. The drilled and grouted dowel bars had to be carefully laid out and installed so that they would not interfere with the bottom leg of the shear stirrups within the precast cap. Galvanized shim plates were detailed to set the correct elevation of the precast cap, however, the contractor was able set the cap without the shim plates. One precast pier cap could be placed in a single day using a crane in a temporary lane closure. On the fourth day, high-strength grout was placed at all pier cap extensions to complete the work.

Full-Depth Precast Deck Panels

Precast deck panels were used to shorten the duration of the deck construction to just eight days. The contractor was able to set a total of 56 full-depth precast concrete panels in three nights. The UHPC joints were poured over two nights, and it took three days for the UHPC to reach the required compressive strength of 14,500 psi, allowing the contractor to use construction equipment on the bridge deck.

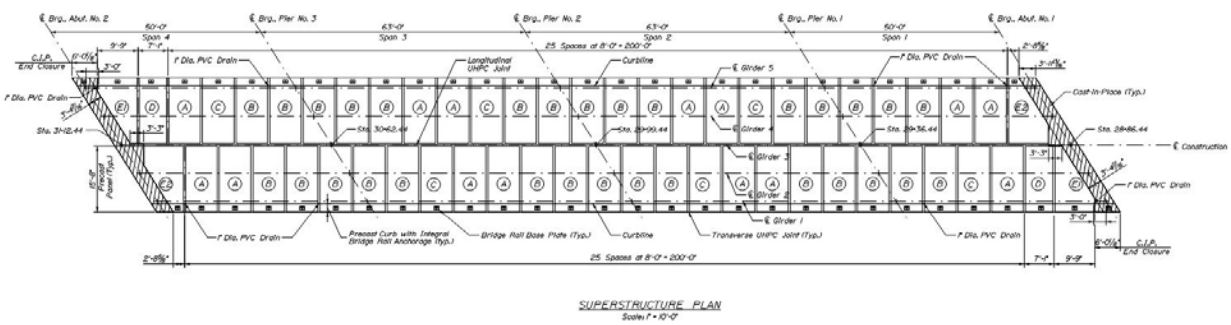

Figure 2: Precast deck panel layout

The precast deck panels were detailed with unique features, including negative moment reinforcing, blind beam haunch voids, leveling bolts, precast bridge curbs with embedded bridge railing anchorages, and slightly skewed reinforcing bars. The deck was designed to act compositely with the continuous bridge girders, requiring the placement of negative moment reinforcing over the piers. Figure 2 shows several different precast panels labeled A, B, C, D, E1, and E2. Panel A was detailed to have the reinforcing required in a positive moment region; panel B was detailed to have the reinforcing required in a negative moment region; and panel C was detailed as a transition panel between the two regions. Panels D, E1, and E2 were all specialty panels to minimize the final closure pour between the deck and the abutment curtain wall at each end of the bridge.

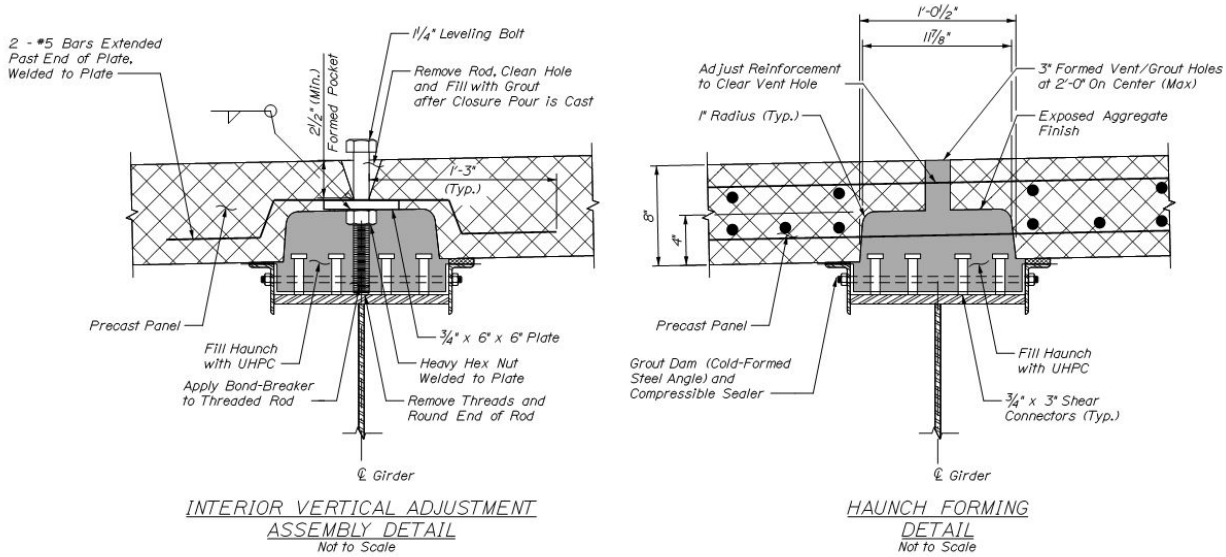

Figure 3: Blind beam haunch details

The full-depth precast panels also included the innovative detail integration of blind beam haunch voids and stub shear studs within the voids. This detail allowed the contractor to shop-install the shear studs to the girders and allowed the bottom mat of reinforcement in the panels to be placed uniformly without any interference between the shear studs and the deck rebar. At the time of design, the AASHTO LRFD Bridge Design Specifications did not provide guidance for UHPC beam haunches and stub shear stud connectors. To obtain more information on the implementation of blind pocket and shear stud size and spacing, VHB designers reached out to the FHWA, in particular the research of Ben Graybeal (1).

Photo 4: Inside of beam haunch void

Leveling bolt assemblies were detailed along the beam haunch voids and along the longitudinal joint along the center girder. The shear studs on the girders were detailed to provide adequate transverse clearance between the center studs to eliminate any conflict with the leveling bolts. The contractor set the leveling bolts to the appropriate height prior to lifting the panels into place. After the panel was set, the leveling bolts were used for additional minor vertical adjustments. In cases where more than 1/2" of adjustment was required, the panel was removed and reset after the leveling bolts were adjusted. The threaded ends of the leveling bolts were specified to be coated with a bond breaker so that after the UHPC was cured, the leveling bolts could be extracted and the holes filled with non-shrink grout.

The bridge curbs and railing anchorages were cast monolithically with the deck panel, eliminating this sequence of construction in the field and allowing the contractor to immediately erect the bridge railing as soon as the UHPC joints reached the required compressive strength of 14,500 psi. During the shop-drawing review phase prior to the construction of the precast panels, the fabricator proposed skewing the transverse and longitudinal reinforcement slightly to ensure the rebar extending into the UHPC joints would not interfere with each other, avoiding potential constructability issues when setting the panels. The precast fabricator submitted detailed 3D shop drawings of the panels that greatly streamlined the review process and ensured proper fit-up during construction. The panels were cast face-down to ensure a smooth finish, and the fabricator used custom reusable steel forms.

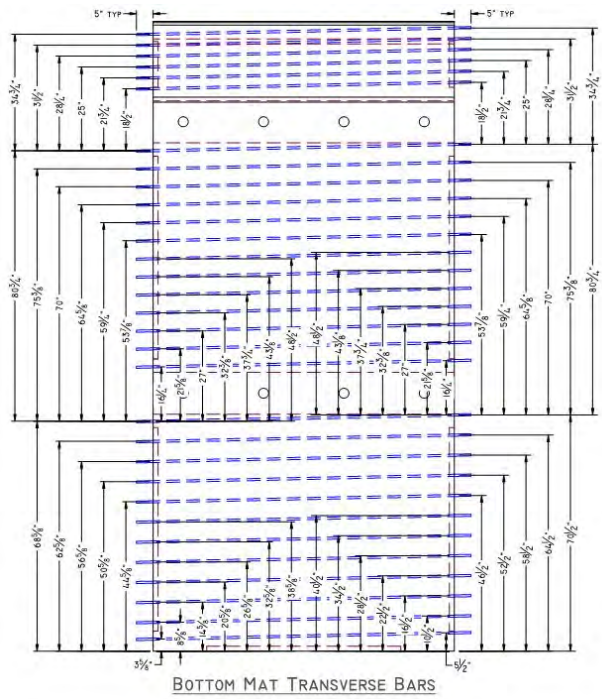

Figure 4: Skewed reinforcing bars in precast deck panel (Superior Concrete, LLC, Auburn, ME)

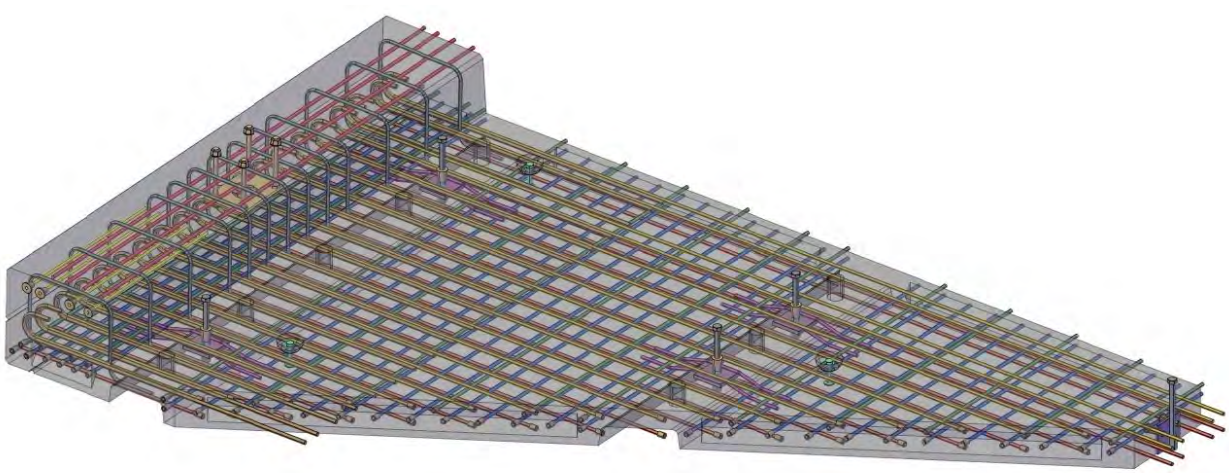

Figure 5: Conceptual view of precast deck panel (Superior Concrete, LLC, Auburn, ME)

The decision to use UHPC was the result of extensive product research. Traditional precast deck panels are longitudinally post-tensioned after the joints are filled, however the post-tensioning process is cumbersome and would have added time to the construction schedule. This project required a superior product for the transverse and longitudinal joints between the panels due to the tensile forces the bridge

deck would experience under live load. Research conducted by Graybeal (2) shows that UHPC can create full tension development strength with a significantly shorter embedment length, even with straight bar extensions and non-contact lap splices. Non-contact lap splices greatly reduced the need for field bending reinforcing due to fit up and provided the contractor additional tolerances when setting the panels.

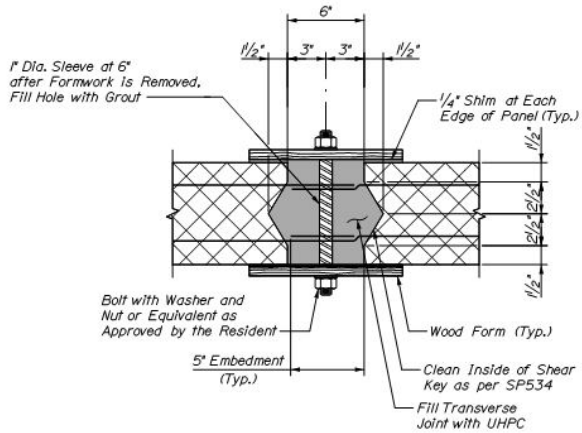

Figure 6: Transverse UHPC joint detail

Photo 5: Precast deck panel transverse and longitudinal joints

Precast Deck Panel and UHPC Mock-up

The MTA required a trial mock-up of the deck panel, blind pocket, and UHPC joint prior to construction. The goal of this mock-up was to avoid any unintentional problems occurring in the field during construction, familiarize the contractor with the detailing and products they would encounter in the field, and assure the MTA that the construction techniques would result in a satisfactory final product. The UHPC was the biggest unknown for the MTA and the contractor. After the UHPC joints were cast and cured, the MTA required the joints be saw-cut full depth so that they could be inspected to determine if there were consolidation issues or if cold joints had formed between the panel surface and joints.

The mock-up proved well worth the time and expense. The UHPC was more flowable than expected and was able to leak between unsealed gaps in the formwork, which proved to be important when setting that actual formwork over the roadway. After the joints were saw-cut, it was observed that consolidation was not an issue and only minor cold joints formed between the batches of UHPC. The cold joints were determined not to be a concern since there would be a minimum of two mixers on site during construction, providing a continuous pour of UHPC and avoiding cold joints in the process. Additionally, after the mock-up, the contractor fabricated more temporary bulkheads than originally planned so that they could quickly close a section if they encountered issues with the continuous supply of UHPC.

Photo 6: Mock-up placement of UHPC

UHPC Placement

With the knowledge gained from the mock-up, the contractor paid extra attention to sealing the formwork. It was crucial that the forms were sealed so that the UHPC would not leak onto traffic below the bridge. The lessons learned from the mock-up paid off, and there were no noticeable leaks in the formwork during the field placement of the UHPC. The UHPC was placed over two nights. Two portable batch mixers were onsite to provide a continuous supply of UHPC. A series of bulkheads were placed between the joints to

ensure consolidation and eliminate horizontal cold joints in the UHPC as it began to set. After the joint region was filled, timber forms were secured above the joint and 5-gallon buckets with holes drilled in the bottom were secured over the detailed grout ports along the blind beam haunch voids. This setup provided pressure heads at the high point within a joint region and ensured consolidation of the UHPC within the voids and joints.

Photo 7: UHPC closure pour forms

Precast Approach Slabs

The use of precast approach slabs allowed the contractor to reduce the approach work duration by approximately one week with a relatively simple procedure. The approach slabs were cast in three panels at a shippable width and detailed with a shear key between each panel. The contractor prepared the subgrade at the approach as if they were going to form a cast-in-place approach slab; they then set the precast slab and injected grout through the detailed grout ports and shear keys. Upon completion of this sequence, the contractor immediately began backfilling above the approach slab to prepare for the final roadway subbase.

LESSONS LEARNED

This project was a success and achieved many of the goals established during the planning stages of design. Recommendations and lessons learned include:

- A mock-up of the UHPC placement is extremely beneficial and recommended if the contractor does not have significant prior experience with the product.
- Provide an adequate bond breaker on the precast deck panel leveling bolts. Several bolts had to be cut from the panels, but this was not a significant issue because the bridge deck was to be covered with a bituminous wearing surface.
- Incorporating a slight skew (1% - 2%) in the precast deck panel transverse and longitudinal rebar is a simple way to ensure there will be no conflict between panels.
- The bridge has been open to traffic and in service for two years with no signs of distress or leakage at the UHPC joints.

SUMMARY

With the implementation of ABC techniques, research, and coordination with manufacturers and the contractor, the Winthrop Road Bridge was constructed in 45 days and open to traffic 10 days ahead of schedule and 105 days faster than a conventional superstructure replacement over the Turnpike. The reduced closure window resulted in a cost premium of approximately 33% compared to similar superstructure replacements constructed with conventional construction techniques.

Photo 8: Completed Winthrop Road underpass

PROJECT TEAM

MTA – Owner

VHB – Lead Engineer and Designer

CPM Constructors – Contractor

Superior Concrete – Precast Concrete Fabricator

Lafarge – UHPC Provider

REFERENCES

(1) Ben Graybeal. 2012. *Ultra-High Performance Concrete Composite Connections for Precast Concrete Bridge Decks,* FHWA-HRT-12-042. U.S. Department of Transportation Federal Highway Administration – Research, Development, and Technology. Turner-Fairbank Highway Research Center 6300 Georgetown Pike McLean, VA, May 2012.

(2) Ben Graybeal. 2014. *Design and Construction of Field-Cast UHPC Connections,* FHWA-HRT-14-084. U.S. Department of Transportation Federal Highway Administration – Research, Development, and Technology. Turner-Fairbank Highway Research Center 6300 Georgetown Pike McLean, VA, October 2014.

INNOVATIVE PARTNERSHIP LEADS TO FIRST USE OF PBUs AND UHPC BY THE NHDOT

Joshua Lund, P.E., McFarland Johnson, (603) 225-2978, jlund@mjinc.com
L. Robert Landry, Jr., PE, New Hampshire DOT, (603) 271-2731, Robert.Landry@dot.nh.gov

INTRODUCTION

This bridge rehabilitation project located in East Kingston, NH replaced a three-span superstructure over the Pan Am Railway during a 25-day roadway closure. The New Hampshire Department of Transportation (NHDOT) partnered with McFarland Johnson (MJ) to develop and implement the first use of Prefabricated Bridge Units (PBUs) and Ultra High Performance Concrete (UHPC) in the state of New Hampshire. The project was partially funded through the FHWA Accelerated Innovation Deployment (AID) Demonstration program. Based on the success of this initial project, the NHDOT is incorporating PBUs and UHPC as viable options for future ABC projects.

BACKGROUND

The bridge carries NH Route 107A over the Pan Am Railway and a residential drive in East Kingston, NH and was constructed in 1937. The existing structure consisted of three simple spans with painted steel beams and a thin reinforced concrete deck. The existing 1937 bridge replaced an at-grade railroad crossing by building up the approaches and utilizing shallow, closely spaced beams to attain the vertical clearance over the railroad. Each of the three simple bridge spans are approximately 40 feet, totaling 120 feet. There are no sidewalks on the bridge, or on the approaches, and the out-to-out bridge width is 32 feet with a curb-to-curb width of 28 feet. The existing deck thickness was 6½ inches with a 2-inch thick pavement overlay.

The middle bridge span is over the Pan Am Railway. The Pan Am Railway supports both freight cars and the Amtrak Downeaster high speed passenger rail, with up to 10 crossings per day running at speeds up to 70 MPH. The high service volume railroad would require frequent intermittent work stoppages and was a challenge for this site. The southern span provided access for a private residential drive. There were no maintained roads under the northern span, however it provided access to a landlocked Town conservation parcel.

The existing full-height concrete counterfort abutment walls were in good condition having been rehabilitated in the 1980s. The existing piers consisted of painted steel columns with a painted steel pier cap founded on concrete spread footings. The piers were in satisfactory condition with minor deterioration and a failing paint system. The superstructure and substructure were in Satisfactory condition (condition rating 6), but the deck was in Serious condition (condition rating 3), thereby categorizing the bridge as 'structurally deficient'.

OBJECTIVES

The primary goal of this project was to remove the bridge from the State's 'Red List' (list of structurally deficient (poor) State-owned bridges in the NHDOT inventory). The work required replacement of the concrete deck and repainting or replacement of the existing beams to extend their service life. Repainting of the steel pier columns and minor concrete substructure repairs were also required.

PROJECT CHALLENGES

The presence of the active Railroad greatly complicated this rehabilitation project. The frequency of the train traffic, combined with the safety measures required for each train passing, would have significant impacts to the duration and cost associated with conventional construction. In addition to the frequency of the trains, the vertical clearance also posed a construction challenge. No impacts to the vertical clearance would be allowed during train movements, significantly impacting the ability to repaint the steel beams in-

place while providing the required containment. The only viable option for the railroad span would be to remove the existing beams and clean, paint, and re-install them.

PROJECT SOLUTIONS

The NHDOT partnered with MJ to evaluate innovative rehabilitation alternatives that would minimize impacts to the travelling public and railroad. It was identified early that improvements to the bridge approaches to raise the profile and gain clearance for additional structure depth would be impractical. Therefore, a bare concrete deck was proposed to maintain the existing vertical clearance and provide a thicker structural concrete deck. Initial alternatives considered repainting the existing steel and using full depth precast deck panels, however repainting the steel would be costly and time consuming due to the active rail line.

The NHDOT collaborated with MJ to develop an ABC alternative to meet the project objectives while mitigating risk associated with construction within the railroad right-of-way. The NHDOT had limited, but successful, previous experience with the application of ABC and had been looking for opportunities to continue the use of ABC on future projects. There were several factors that made this project an ideal candidate for the use of ABC. The traffic volumes were relatively low at 2,200 ADT. The low traffic volumes combined with the proposed detour (all on State routes) adding only one mile to the through traffic, significantly reduced the potential risk associated with an unforeseen extended closure. Due to the frequency of trains, an ABC option would be cost competitive with conventional construction and improve overall project safety by minimizing the construction duration within the railroad corridor.

PBUs were identified as the preferred ABC solution for this specific site. PBUs are a prefabricated system consisting of a pair of steel beams and a precast concrete deck section. PBUs are installed side by side to form the bridge deck and are connected with a separate concrete closure pour. The PBU beams are typically spaced at four to five feet to maintain an overall section width of less than 10 feet, this allows for standard transport on roadways without requiring wide load accommodations. The PBU option benefitted the NHDOT because the fabrication closely resembled conventional construction and utilized standard materials and specifications, reducing the NHDOT's risk associated with their first use of this new bridge element.

The PBUs were designed and detailed to closely match the existing superstructure configuration, consisting of eight beams at a four-foot spacing, minimizing impacts to the substructure. The PBU design allowed the vertical clearance over the railroad to be maintained and limited the approach roadway work by matching the existing profile. The rapid nature of PBU installation would minimize the number of intermittent construction shutdowns due to the active rail line, particularly if erected at night when trains are less frequent.

The closure pour material provided another opportunity for innovation on this project. A non-shrink grout would typically be used, however, given the necessity for a bare deck, this was not desirable for long-term durability. UHPC was the recommended solution to address the long-term durability concern. UHPC is an innovative cementitious material that achieves minimum 28-day compressive strengths of 21.7 ksi. A high percentage of discontinuous metal fibers are the key to the high compressive and tensile strengths associated with UHPC. UHPC also has a discontinuous pore structure that significantly enhances durability as compared to conventional concrete and grout and is ideal for long-term performance on a bare deck application.

The high strength of UHPC allows for shorter reinforcement development lengths and a significantly narrower closure pour as compared to conventional construction. UHPC's superior bond strength alleviates concerns of future joint leakage and deterioration typically associated with closure pours on bare concrete decks. The proposed rehabilitation included UHPC link slabs over the piers to eliminate the need for deck joints. The material properties of UHPC are well suited for use with link slabs due to its increased rupture strength which helps to mitigate potential cracking.

CONSTRUCTION

The Contract included Incentive/Disincentive provisions associated with a 28-day closure to encourage timely completion of construction. The provisions of the Contact also allowed for, and the Contractor did, self-fabrication of the PBUs. Allowing the contractor to self-fabricate the PBUs reduced cost and risk on the project, as the contractor had complete control over their schedule and fabrication tolerances. The Contract also included provisions for the supplier of the UHPC to be on site to supervise the preparation, batching, testing, and installation of the UHPC. This provision is common and helped mitigate the NHDOT's risk associated with their first use of this new innovative material.

The project was successfully completed in 25 days (three days ahead of schedule). The use of PBUs and UHPC greatly reduced the construction duration and impacts to the roadway users. By having the elements prefabricated the PBUs enabled rapid erection of the replacement superstructure, taking only one night to complete. The construction method traditionally employed by NHDOT to deliver a comparable project would have required up to a six-month duration which may have included phased construction. For this project, conventional construction would have been heavily impacted by the shutdowns required for the frequent passage of trains however, by making use of PBUs and UHPC, this project realized a savings of five months.

CONCLUSIONS

Implementing new and innovative design and construction concepts can be a daunting step for any Owner however, when done correctly, can be very rewarding and beneficial. An accelerated roadway closure is a high-risk endeavor by itself due to potential impacts to the travelling public. The mitigation of the additional risk resulting from implementation of new innovations is crucial, both from a Contractors perspective and from an Owners perspective. Selecting the appropriate project for the first use of an innovative technique is critical to the success of the project and the innovation.

This project was an overall success and well received by the Public. The experience gained on this project will lead to the continued use of ABC and implementation of innovation on future NHDOT projects. PBUs will become a useful tool in the NHDOT's toolbox for future bridge projects. UHPC will also be added to the toolbox and utilized provided the application warrants the considerable cost. This bridge will be monitored for durability of the UHPC joints, though they are expected to function as intended.

LESSONS LEARNED

Exposed Aggregate Finish

To maximize the bond strength of the closure pour between the PBU concrete and the UHPC, an 'exposed aggregate finish' is specified for all concrete surfaces exposed to UHPC. The Contractor self-performed the PBUs and did not attain desired finish on the surfaces exposed to UHPC.

Ensure the concept and process of achieving an 'exposed aggregate finish' is understood by the project team, especially Contractors with limited experience with UHPC. Although the plans and specifications noted an exposed aggregate finish with a minimum ¼ inch amplitude throughout, the Contractor was not aware of its importance nor the process to achieve it. A construction submittal outlining the procedure for attaining the exposed aggregate finish may alleviate this issue in the future.

Saturated Surface Dry

Better define the saturated surface dry condition. The surfaces exposed to the UHPC were specified to be saturated surface dry, however this condition was not well defined. A more prescriptive process to achieve the saturated surface dry condition would be better for the Contractor and the inspector.

MNDOT USE OF BRIDGE MOVE TECHNIQUES AND PRECAST DECK WITH UHPC

Paul Pilarski, P.E., S.E., MnDOT, 651-366-4563, paul.pilarski@state.mn.us
Matt Christie, P.E., WSP USA Inc., 612-217-9156, matt.christie@wsp.com

ABSTRACT

A 2019 MnDOT project executed bridge replacements on existing alignment by utilizing a bridge slide and also incorporated UHPC to join full-depth precast deck panels on the replacement bridges. This paper will briefly examine the bridge slide and provide a walkthrough of the precast deck application from plan details to field completion. This project made use of a "hidden pocket" composite connection detail to limit exposure on the deck top surface. Plan details and specifications were developed to meet or exceed traditional CIP deck in form and function. A critical review of the UHPC-joined panels will be made in comparison to cast-in-place deck for both cost and accelerated construction schedule.

Project Introduction

Two bridges are being replaced at one of Minnesota's busiest interchanges joining trunk highways I494/I694 and I94. Just east of St. Paul, the existing four-span bridges were built in 1966 and consist of continuous steel girders on multi-column piers. The bridges were selected for replacement because of underside deck deterioration, inadequate bridge width, steel section loss and failing paint . Because of high-volume traffic and concern with ramp closure time, ABC techniques were considered. Two techniques were selected: A bridge slide and full-depth precast deck panels. The replacement bridges consist of two prestressed beam spans with semi-integral abutments on a 3-degree skew.

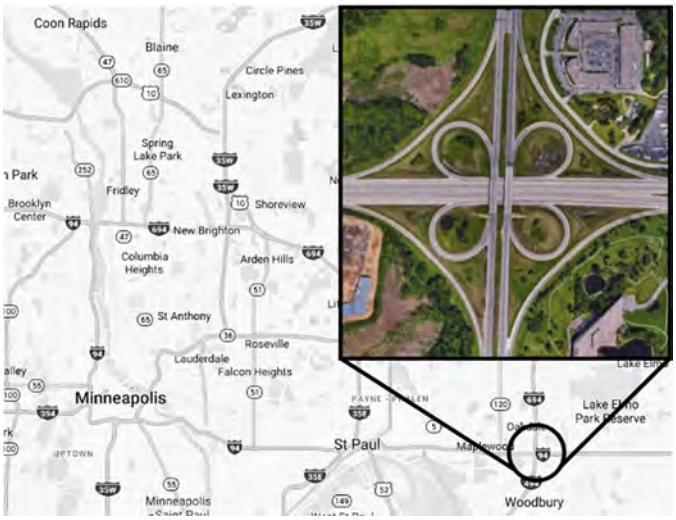

Figure 1 – Location map

ABC Identification

The bridge site ranks very high for accelerated schedule due to traffic volume and limited ability to detour. However, the bundled roadway work extents and number of stages limited the benefits of bridge specific acceleration. MnDOT decided that a temporary alignment in the median between the bridges would yield the highest overall project benefit and was a natural option due to an existing and sufficient gap between the parallel bridges. Other staging options included temporarily widening one bridge to allow for both traffic directions on one structure while the original direction was reconstructed. However, the bypass alignment alternative allowed for condensed schedule and avoided new girder fabrication.

At the time of project development, only three full-depth precast deck panel projects had been constructed in Minnesota. The most recent project was built by Hennepin County in 2017 and used UHPC to join precast slab spans. MnDOT had not used UHPC before but had constructed two decks using precast full-depth deck panels where grouted transverse and longitudinal joints were used with longitudinal post-tensioning. One of these decks was on a new prestressed beam structure, while another project was a redeck on 4-span steel girders. Contractors on both projects commented that the post-tensioning requirements added significant complexity, construction schedule and planning requirements to the project.

With encouragement from the FHWA, MnDOT committed to using UHPC and precast deck panels as part of this project. In preparation, FHWA and four MnDOT representatives performed a scanning tour to New York in May 2018 to gain knowledge on current practice and learned from DOT agencies more mature in

their use of UHPC. New York DOT representatives provided valuable feedback and site reviews. A UHPC placement on the Major Deegan Freeway (Interstate I87) in New York City was observed which was very helpful in understanding operations. Establishing these contacts and observing a placement was very helpful toward writing specifications and recognizing field controls necessary to deliver quality construction.

Constructability reviews with bridge contractors were held four months before letting due to the uniqueness of the concepts and schedule. These constructability reviews were conducted one-on-one between MnDOT and interested contractors and were largely successful because of the following input received:

- Insight on contractor risk items and experience in both UHPC and slides
- Feedback on contractor bid items needs
- Feedback on details and suggestions for bridge slide pay items
- Understanding of contractor-generated engineering submittals and perception of liability once the temporary bridge was in service
- Precast pile bent pros and cons
- Lead time on critical materials and engineering tasks
- Contractor comfort in self-performing precast deck panel construction
- Suggestions for enabling better bids such as advance draft plan and spec reviews
- General increases in contractor knowledge of the project and technical requirements

Project Goals and Achievements

The MnDOT Bridge Office serves as a centralized technical office producing bridge plans, advising districts and facilitating bridge asset management. Structural staging such as the bridge slide or other ABC techniques are also led by the Bridge Office. Whenever new technology is applied it is carefully screened against current practice for gains in construction speed, durability and complexity. In the case of UHPC-joined precast deck panels, it was important to MnDOT that the technology would be compared with conventional construction methods. Cast-in-place (CIP) decks had the following perceived advantages that were to be overcome:

- Do not require thin bonded overlays for durability or ride quality
- Can incorporate roadway crowns and cross-slope changes
- Have been successful in very limited cracking using fibers, HPC concrete and curing controls
- Adjustments can be made for variable haunch/stool heights
- For durability, CIP decks do not permit nailing into the deck top surface for forming

The details and specifications were developed with these characteristics in mind. MnDOT hired WSP USA to develop preliminary and final plans as well as specifications. The consultant was able to bring resources from involvement in projects in other parts of the county and deliver the project on an accelerated schedule.

Bridge Slide

During project development two temporary bridge options were examined using the open median as a temporary alignment: Sliding the existing bridge or a contractor provided temporary bridge. The temporary bridge option focused on commercial temporary bridges under a lease arrangement because they would be readily available to meet the schedule. The temporary bridge option was attractive because there would be fewer bid items, fewer temporary substructures to build, and less perceived risk to MnDOT. It was soon realized that the multiple roadway stages would require construction to stretch over two summer construction seasons. A leased temporary bridge over two years became less economical and instead preference shifted toward a bridge slide utilizing the existing superstructure. The proposed 4-span steel girder with deck slide was not without schedule challenge. With a November award timeframe, the contractor, Kraemer North America, was required to build 5

Figure 2 – Schematic of bridge slide

temporary substructures during the first winter season. The temporary substructures were cast against the existing substructure and were finished level to provide a continuous top rolling surface.

The slide operation occurred during a May 30th weekend closure of I94 and SB I694. Sawcutting started with a partial closure at 7 PM Friday and the full closure was in place at 9 PM. Since the median was narrower than the existing bridge, only the portion of the existing bridge required for 2-lanes was identified for the move. Reducing the bridge width also created more construction room for the replacement bridges and simplified the move. The existing deck was sawcut longitudinally and slid as depicted in Figure 2. With the longitudinal sawcut completed by 10 PM, the narrowed southbound superstructure was jacked vertically, Hillman rollers placed on temporary channels for a uniform rolling surface, and a hydraulic push system installed at each support line.

At 6:30 AM Saturday the first push was initiated and the slide was completed by 2 PM. After the slide, the bridge was jacked vertically to remove the rollers and lowered onto elastomeric pads. An observation made at the time was that there were very tight clearances between the existing deck and abutment and higher temperatures during the move might have required additional removals and more preparation time due to joint closure (See Figure 3).

Figure 3 – Tight end joints during slide

Figure 4 – Bridge slide on temporary pile bent

Concrete approach slabs and approach barrier were installed prior to the slide to interface with the superstructure. To accommodate any vertical deviations from the as-designed elevations, the concrete approach panel was intentionally finished 2-inches lower than final grade. A 2-foot wide transition header to the bridge was established using rapid set patch material. After a 40-minute cure on the header, asphalt paving on top of the approach panel was completed and the temporary bridge was opened by 11 PM Saturday. No joint seal was installed in the open joint due to the temporary nature of the structure. The demolition of the remainder of the existing southbound bridge superstructure and substructures was completed after the move in the same weekend. I94 was opened to traffic by 5 AM Monday morning.

Precast Panel and UHPC Deck Details

During the design phase, workshops between WSP USA, MnDOT Bridge and construction personnel were organized where many panel detailing decisions were made. This exercise greatly contributed to delivering a successfully implementable design within a short 10-month design timeframe.

A total of 88 precast concrete panels are used on the two bridges. Each panel is 9'-10½" by 30'-8" and were cast at 9¼" in thickness. The approximate weight of each panel is 35 kips. The transverse and longitudinal joints between the panels are a nominal width of 7". Bar projection is 6" with a joint width tolerance of ±1" to meet the required bar lap splice. The longitudinal deck joint occurs directly over a girder line, incorporating the haunch.

The bridge deck crown was incorporated into the panels rather than placing a longitudinal joint at the crown. This feature was detailed to make panel sizes consistent and reduce the overall number of panel types, forms, and joint locations. Fewer panels also means less bonding surface preparation and UHPC volume. Several fabricators and contractors gave feedback that a crowned panel could be produced but would complicate bunking and shipping. During panel production, no significant issues were encountered by including the crown into the deck panel.

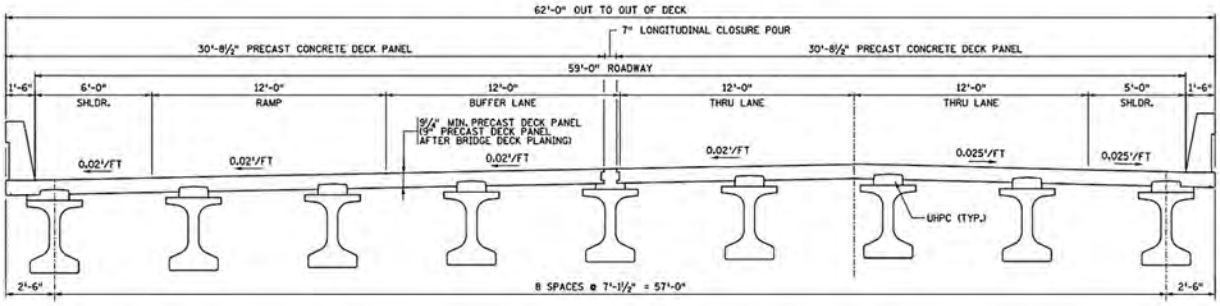

Figure 5 - Typical cross section with crowned precast deck panel for fewer longitudinal joints. Very limited deck surface penetrations were desired and hidden pockets were utilized at each beam line.

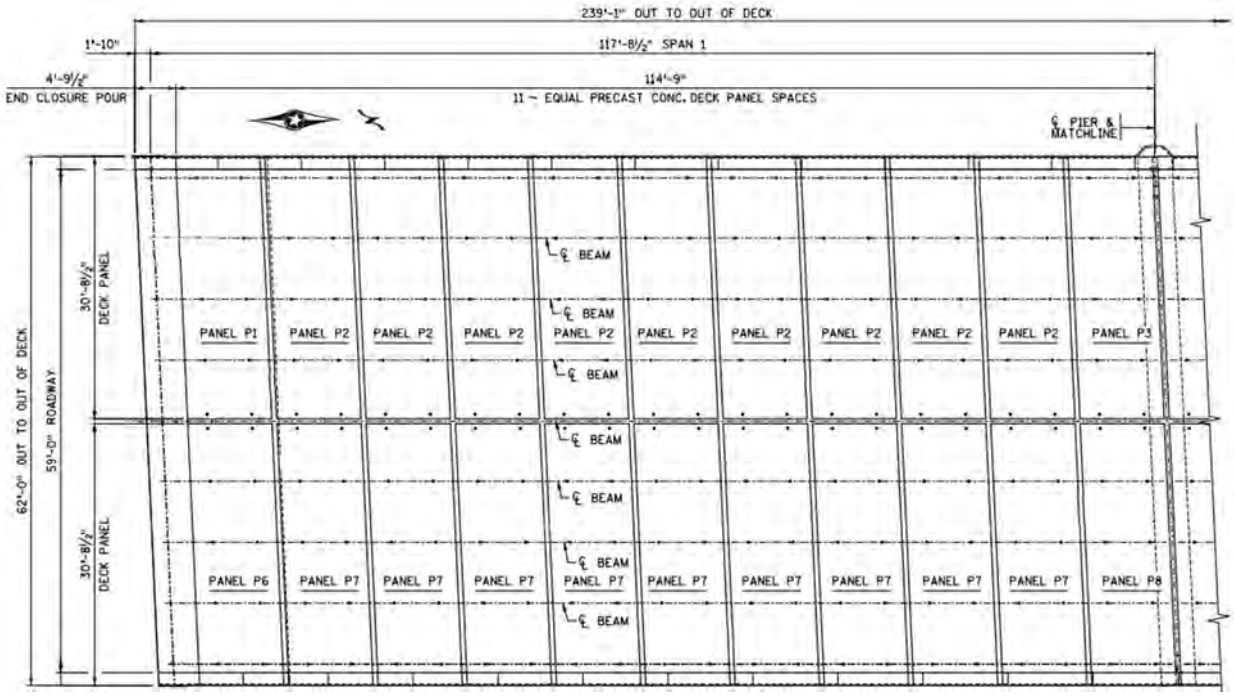

Figure 6 - Partial deck plan showing panel layout in one of two spans.

Panels utilize a combination of epoxy and stainless reinforcement and employed a common rebar layout interior of the side form. Bars penetrating the forms were separated from the interior reinforcing and lapped to the interior region by non-contact laps. This arrangement enables easy alternating positioning of the projecting bars to avoid interference between adjacent panels.

The reinforcement layout separation between interior mat and projecting bars enabled flexibility and also made panel shop drawings easier to produce. Separating the interior mat from projecting bars would also allow for pre-tying interior mats and setting within the form. The contractor, however, constructed multiple form beds and shifted rebar crews to keep production work moving.

Stainless steel reinforcing is used for bars projecting into joints, bars within 6” of the edges of the panel, and barrier stirrups. This rebar material arrangement was selected as a balanced investment approach to

help ensure the long-term performance of the deck. With only stainless bars crossing the construction joint, improved corrosion resistance was available if adequate bond was not achieved or if cracking were to occur in the deck panel concrete near the UHPC joints. Such cracking may be possible over time because the UHPC bond can be greater than the tensile strength of the deck panel concrete.
The use of stainless projecting bars also removed concern for epoxy coating damage due to any field bending or prolonged UV exposure. The contractor remarked that the dual use of epoxy coated and stainless rebar did not present any production challenges or significant cost increases.

Figure 7 – Steel panel form showing Interior mat of reinforcement with projecting stainless steel bars in noncontact laps permit rebar offsets in adjacent panels.

Figure 8 - Crowned precast deck panels after curing. Note barrier bars and projecting bars are stainless steel. In fact, all bars within 6-inches of UHPC joints are stainless steel to mitigate risk of near-joint cracking.

The design of the panels incorporates a 'hidden pocket' composite connection. This detail helps limit the number and size of required deck penetrations compared to 'through' pockets that need to be grouted – limiting areas of possible infiltration.

Two alternate details were presented in the construction documents for selection by the contractor. The first detail (Figure 9 & 14) incorporated the bottom mat of transverse deck bars to provide horizontal shear engagement, but require a larger voided area for UHPC flowability and therefore increased UHPC volume. The second concept (Figure 10) uses a shallower 'hidden pocket' and less UHPC, but required additional bars that extended below the bottom of the panel. Since the panels have barrier bars projecting out of the top for later installation of a cast-in-place barrier, this results in projecting bars on both the top and bottom of the panels – potentially complicating production.

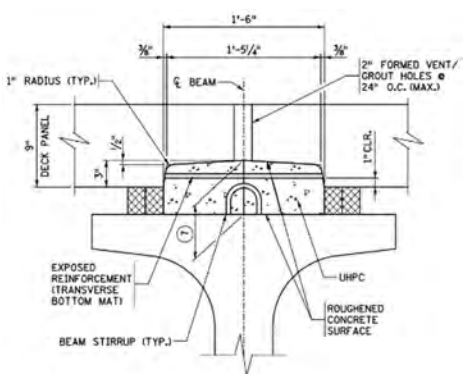

Figure 9 – Hidden pocket detail

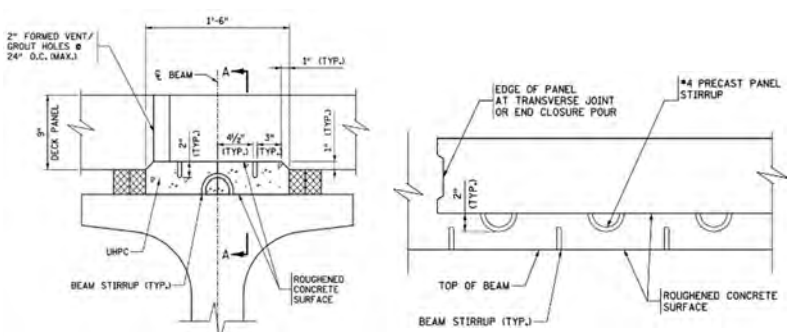

Figure 10 – Hidden pocket alternate with additional projecting bars Section A-A shown (Not Used)

Both details also have a haunch width that is smaller than the full top flange width of the girder, limiting UHPC volume required. The minimum haunch width was driven by UHPC horizontal shear stress and recommendations by FHWA research. Ultimately, the contractor selected the first detail which utilizes the bottom mat of deck reinforcing steel for composite engagement.

Both haunch details use compressible foam glued between the top flange and panel for UHPC forming. Two adjacent rows of foam with staggered butt joints was required based on experience that butted foam tended to leak upon compression. As a result of trials, the contractor learned that a double line of haunch foam in combination with temporary wood restraints worked well to prevent UHPC leaks. Compressible foam height was oversized by ¾" to allow for haunch adjustments.

Top and bottom joint forms were successfully implemented with no deck nailing. To achieve this, a sacrificial nylon bar passed through the joint to sandwich the top and bottom forms (Figure 12).

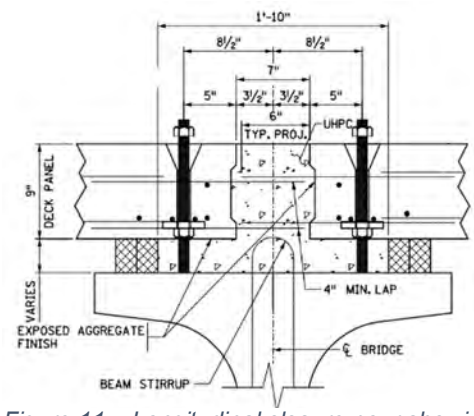

Figure 11 – Longitudinal closure pour showing integration of haunch and joint, including leveling rod configuration.

Figure 12 – "No-nail" top form configuration showing nylon bar ties.

As can be seen in Figure 14, foam positioning caused some rework during construction because the foam intruded into the pocket and encroached on bottom bar cover as well as narrowed the connection. The panels in these areas were lifted by use of the leveling rods, the foam was removed and replaced with narrower foam, and the panel lowered onto the new foam. In future projects a tolerance to the hidden pocket should be specified to allow for inexact panel placement. The combined width of the foam should be set back slightly from the haunch edge to avoid reducing haunch width and bottom concrete cover.

Figure 13 – Longitudinal joint
Note the exposed aggregate finish with fibers.

Figure 14 – "Hidden pocket" composite connection
Note foam was cut too wide and became misaligned.

UHPC flowability was a concern and beam camber controls were specified at limits of +1/2", -3/4" from predicted camber shown in the plan documents. Camber control was particularly critical because the optimized beams contained a significant amount of pre-stressing which increases the risk of camber growth. The contractor met the camber limits by coordinating a "just-in-time" delivery of the beams for erection with no other camber control actions necessary. The beams were erected with less than predicted camber as a result of this good coordination by the contractor and beam fabricator.

During the design phase, multiple options were discussed for providing temporary support of the panels on the prestressed concrete beams prior to pouring of the UHPC haunch/composite connection. Two options considered were leveling rods and steel shims. Steel shims are less complex, but provide no adjustment capability after the panels are set. Leveling rods require a more complex assembly to be embedded in the panel, but allow adjustment at any point during the panel placement process. The

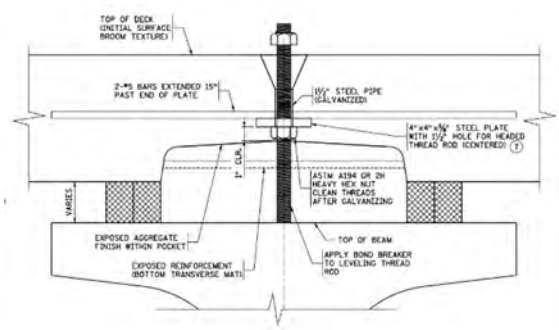

Figure 15 – Typical leveling rod detail

design team decided that having the additional adjustment flexibility was desired, particularly since no wearing course was planned and the top of panel elevations needed to be accurate. The design team also considered that, unlike with steel beams, the relative stiffness of prestressed concrete beams would reduce the redistribution of panel dead load between beams through deflections. Leveling rods allow elevation and load distribution corrections to be made if necessary. Additionally, leveling rods can be removed after the UHPC haunch is cured. Steel shims would be permanently embedded and would have the potential to be points of high load concentration, carrying the panel dead load and attracting other loads due to the relative stiffness of the shims. The typical leveling rod detail is shown in Figure 15.

Intermediate construction elevations were calculated and provided to the contractor for loading conditions of panels only and panels + UHPC + Barrier. Using these values and top of girder surveys, the leveling rods were pre-set for the final loading condition prior to panel placement to provide the correct haunch heights. The panel weight only elevations were valuable in that they allowed the contractor to verify this intermediate elevation prior to UHPC placement. The detailed elevation information and pre-setting of leveling rods resulted in minimal required adjustments once the panels were placed.

Mock-Up Panels

The contract required the production of mock-up test panels containing all elements of the final production panels. A trial UHPC batching and placement was also required. The test was intended to investigate several aspects of the panel configuration:

- Leveling rods – Thread coarseness
- Compressible foam adequacy with multiple foam types investigated
- Top and bottom joint form configuration
- UHPC flowability and bond
- Vent hole adequacy

The contractor set the panels on three simulated lines of girders set to grade and staggered vertically to simulate the bridge cross slope. Up to ten 4-inch diameter cores were required for void examination and bond testing. During the first mockup, much of the UHPC was lost when a foam form blow-out occurred. This provided valuable feedback to the contractor on the best foam type for use and the necessity for supplemental foam restraint during production pours.

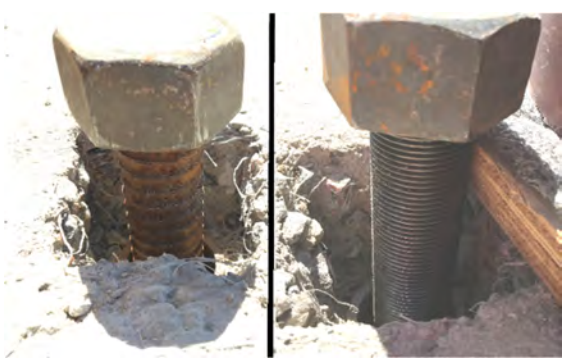

Figure 16 – Coil rod and fine thread leveling rod trials

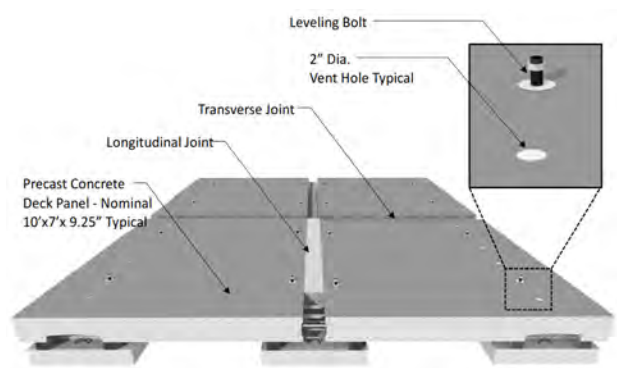

Figure 17 – Mock-Up Panel Rendering

A second mock-up was required which was very successful. It was learned that both coil rod and fine thread rods could not be extracted or adjusted after UHPC placement if no robust bond breaker was applied. Moly grease, paraffin wax, pipe insulation, and tape were all attempted. Pipe insulation foam worked on both thread pitches. Paraffin wax and moly grease did not work on fine thread rod, and duct tape was unsuccessful on both thread pitches. In the end the contractor used fine thread rod and pipe insulation because the material and embedments had already been fabricated at high cost.

Panel Fabrication & Handling
Panel production was self-performed by the contractor in their construction yard using fabricated steel forms on metal beds. Steel forms permitted tight conformance to the specification panel tolerances and geometric consistency. Hidden pockets were formed using split pans of steel, sandwiching reinforcement. A concrete retarder was applied to the forms in composite connection areas where a roughened surface was required. After removal from the forms, these areas were water blasted to expose the roughened surface. This was greatly successful in producing a uniform roughened surface.

The contractor was required to evaluate stresses in panels for all unique stages of panel handling, storage and erection. Stresses were limited to the PCI Design Handbook's "no discernible cracking" criteria. Despite the stress analysis, cracking was found in many panels. Overall 14% of the bottom bunked panels showed longitudinal cracks and 19% of the top bunked panels showed longitudinal cracks. It was difficult to point to a single cause for the cracking. Fine cracking may have initiated during handling and bunking but was more apparent after curing and shrinkage in storage. Some panel sets were bunked three high but no cracking in the bottom panel was observed. After cracks first appeared in panels subsequent storage operations were limited to two-high bunks, curing compound was placed over the pocket areas to prevent uneven moisture loss and a double layer of plastic was placed on bunks to reduce restraint. Cracking levels were slightly reduced but it is believed thinning the panel at the hidden pocket resulted in greater susceptibility to cracking during handling and storage.

UHPC Placement and Lessons Learned
Construction time for the UHPC-joined precast deck was around 7 weeks. Panel erection started on July 3rd and ended the morning of July 13th. All but the first four panels were placed during night time lane closures. A full closure would have allowed most panels to be set in a single weekend, but the contract had limits on full closures to I94. Forming the haunch and sealing the joints occurred in the same closures as placing the corresponding deck panels.

The first UHPC placement occurred on July 16th and the last of five UHPC placements was on July 24th. UHPC placements were performed every other day due to a specification requirement of 48-hour delay between pours and 11,000 psi strength requirement. With the last UHPC placement on July 24th, the semi-integral abutment end diaphragm was formed, poured and cured. Backfilling commenced when the end diaphragm reached 2600 psi and subsequently the approach panels were cast. After three days of cure on approach panels the barrier was slip-formed and final connections with guardrail made. Diamond grinding of the deck occurred in two passes finishing on August 22nd. The bridge was opened to traffic on August 23rd. In summary, from the initial set of the first precast deck panel to opening to traffic took 51 days.

Cast in place decks have advantages in semi-integral abutments because the end diaphragms are poured monolithically with the deck. It is estimated that traditionally forming the deck and tying deck steel averages three-weeks and pouring and curing the deck takes 7 to 10 days. With approach panel construction at 4 days and barrier slipforming it could be estimated that a cast in place deck would take 40 to 50 days depending on closure related time to form over traffic. Another CIP deck advantage is the lack of cure wait time between subsequent UHPC pours and the separate form and pour time on end diaphragms.

During the UHPC operation, two UHPC mixers were run simultaneously to produce adequate volume for each UHPC night placement. The longest UHPC placement was just under 8-hours. If higher volume UHPC mixers or ready-mix were available with fewer UHPC pours, shorter construction time would have been possible. During post-construction discussions, it was asked whether the haunch concrete should have been a separate material placement. The answer was a resounding "no" because breaking the stool or haunch area concrete into a separate placement could have complicated the forming and bulkheads with transverse and longitudinal joints. In summary, limitations of mixing volume and placement speed hampered the ability for the precast deck to show significant speed advantage over the CIP deck.

To achieve a smooth finished ride without sacrificing cover, the panels were cast ¼" thicker than the final desired deck thickness. Prior to striping and crack sealing, diamond grinding was used to remove ¼"

thickness and to provide a final finished surface. Overall this strategy was successful, but two passes of grinding were required because after the initial grinding pass the UHPC joint surfaces and lifting lug recesses showed pits and poor quality crust remaining at the top surface. One concern with too deep a grind is that re-profiling a deck by diamond grinding can leave the gutter area no longer a low point. Vehicles are more susceptible to loss of traction if water pools or freezes away from the gutterline.

Of primary interest is not only the time savings but also the relative cost of precast deck panels. In Minnesota, the average cast in place high performance concrete deck with reinforcement, cured and in-place averages $40 per square foot. The precast deck panel deck including reinforcement and UHPC averaged $119 per square foot for 2 bridges at 14,220 square feet each. While there are some premiums for contractor risk due to the uniqueness of the project, the perception by all parties is that the UHPC price would have to be significantly reduced to become cost competitive.

A close-out meeting with the contractor in late 2019 revealed many lessons. On the constructability side, we learned that many of the details incorporated into the bid documents got it right:

1. Panel size and number were optimal.
2. The crowned panel was not an issue. Splitting the bridge width into three panels to avoid a crowned panel would have provided less economy.
3. Allowing the contractor to develop their own UHPC sequence was viewed favorably by the contractor for sequencing work. However, late in construction MnDOT requested the transverse joint over the pier be cast after the majority of the span UHPC was placed.
4. Stainless steel mixed with epoxy did not present construction challenges and worked well to enhance durability and reduce coating damage issues.
5. Leveling rods worked well when needed for resetting haunch foam.

However, there were areas that could be improved upon:

1. Although the hidden pocket was implemented well, fine cracking occurred originating around the hidden pockets. Higher fiber dosages may help further control cracking.
2. Rigid foam should not be used for stool/haunch forming. Pre-compressed rubber-back foam joint material was unsuccessful alone in restricting UHPC without additional mechanical supplemental restraint.
3. The leveling rods would have been cheaper and more functional if a traditional coil rod were used. Galvanizing of the fine thread rod and embedded nut was not possible.
4. Although successfully overcome, the prohibition against nailing into the deck for the UHPC top forms generated a large amount of surface obstacles that the concrete buggies had to steer around when delivering UHPC.
5. Specifications required 48 hours and 11,000 psi before subsequent UHPC pours. If this specification was reduced to 24 hours the deck would have been completed 5 days sooner. Next year's bridge will hold the 11,000 psi requirement but relax the prescriptive 48-hour requirement.
6. Semi-integral abutment end diaphragms were the last element cast in the span which extended the schedule. If torsion and cracking issues at the beam ends can be overcome, it would be preferable to cast the end diaphragm prior to finishing UHPC placements.
7. Precast panels near abutments used longer projecting bars because they were lapping with bars in 4000 psi mix instead of UHPC. The longer projecting bars created oversize loads that might have been a concern on more restrictive shipping routes.
8. No panel erection sequence was specified but concern grew when the contractor proposed to place most right panels prior to left panels in a span. One concern was that leveling rods on the shared center beam could see dramatic changes in reaction. Another concern was the leveling rods might have to be adjusted multiple times to make sure panels were supported to prevent cracking at all phases of erection. In the future, panel erection specifications should stipulate that the full transverse width of the bridge should be loaded uniformly within a couple panels.

UHPC placement proceeded from the downhill side toward uphill to give early indications of any leaks. This also allowed top forming as the UHPC breached the surface at low points. Additional discoveries resulted during the project:

1. UHPC bag storage and bunking is very important. Rain events almost caused loss of bagged material. Cement material temperature was also increased by being stored in direct sunlight, resulting in more ice being needed for cooling the mix. Providing a covered and shaded storage area would be beneficial.
2. Debris was found floating in the haunch area during one of the UHPC pours. It was important to keep the precast deck clean at all times to avoid rain carrying debris into some of the many inaccessible formed areas.
3. Heeding weather forecasts is very important. Precipitation during UHPC mixing, pouring and placement could be devastating due to the sealed nature of the forms and large volumes of UHPC within a large hidden haunch area.
4. A weak crust forms in upper surface of UHPC including thin areas within the hidden pocket. Future research should verify shear strength due to crust. Air bubbles grow in size from the top of beam to underside of panel (Figure 18). Vertical surface bond was found to be greater than 421 psi with failure in the CIP deck at all three bond tests. Bond of UHPC to overhead haunch surfaces was found to be low with one location failing at 271 psi on the bond line and the other location coming apart at the bond line during coring operations. The intact core bond surface contained 50% voids because of entrapped air. Roughening is required for bond but a future trial should include a pitched pocket with a smooth v-groove at top of pocket to allow for air escape.
5. Vent holes were varied from 2-inch diameter at 2-foot spacing to 3-inch diameter at 3.5-foot spacing. The latter was used after finding no issues, and it is speculated that a haunch flow length of 11-feet without vent holes could be used without issue.

Figure 18 – Core showing UHPC within haunch and air voids at upper bond line of hidden pocket

From a traffic control perspective, the use of the bridge slide was a huge success. Bridge demolition activities alone usually require a full weekend closure and the contractor was able to accomplish both the slide and partial demolition in the same weekend. The precast deck and UHPC panels were not optimal from a traffic perspective. This bridge crossed over interstate I94, and due to closure limits on I94 the precast and UHPC placement operations were not continuous. In future precast deck projects, it would be advisable to select sites crossing over lesser traveled routes. Much greater economy could then be realized because crane mobilizations could be minimized and erection and placement operations could be made more continuous.


Figure 19 – Finished bridge with temporary bridge also visible in middle area.

In conclusion, this ABC project with bridge slide and precast full depth deck came at a price premium, but the investment yielded valuable knowledge gain. The lessons learned will enable MnDOT and the contracting community in the future to build on the successes of this project, mitigate issues and economize the technology of precast deck with UHPC. The newly opened UHPC-joined precast panel deck contains no leaching cracks and UHPC joints are performing well in this first season. MnDOT is grateful to WSP USA for the great interaction during plan development and construction and is very fortunate to have had a knowledgeable contractor execute the work in a partnering manner.

Precast Segmental as an ABC Tool

Gregg A. Freeby, P.E., American Segmental Bridge Institute, (512) 523-8214, gfreeby@asbi-assoc.org

INTRODUCTION

While precast segmental bridge construction (PSBC) is not a new idea, its use as an ABC tool has created new interest in segmental bridge construction.

The construction methods used for PSBC are well-suited for congested urban environments and can be built using span-by-span or cantilever construction methods, with precast segments being erected by conventional cranes or specialized equipment. All these methods are very efficient and minimize the impact on the traveling public and surrounding neighborhoods.

Segmental bridges are easily adapted to a wide range of alignments and geometry. They are ideal for horizontal curves with tight radii and combinations of vertical and horizontal curves, allowing for corresponding super-elevation to be “built-in” when the segments are cast. Additionally, segmental bridges can easily accommodate a wide range of span lengths and, in many situations, this flexibility is required to work around existing infrastructure.

METHODS OF PRECAST SEGMENTAL CONSTRUCTION

There are currently two main methods of precast segmental construction: span-by-span and cantilever. Each of these methods has a sub-set of erection methods.

a. Span-by-Span
    i. Gantry
    ii. Crane
    iii. Falsework
b. Cantilever
    i. Launching Gantry
    ii. Lifting Frames
    iii. Cranes

Most of these methods of construction were used in the illustrative examples found below and each of these methods has its own merits with respect to ABC.

LESNER BRIDGE IN VIRGINIA BEACH, VIRGINIA

Located on the Shore Drive corridor and adjacent to the mouth of the Chesapeake Bay, the new Lesner Bridge crosses the Lynnhaven Inlet and serves as the gateway to the ocean front tourism center. These new structures delivered two signature bridges for the City of Virginia Beach and surrounding communities, providing a critical link across the inlet.

Each structure consists of ten spans: nine at 150 ft. with a channel span of 225 ft., including nine piers and two abutments. The new bridges greatly improve the corridor by providing wider lane widths, wider shoulders, new 10-ft. multi-use paths in each direction, landscaping improvements, improved signalization, and decorative lighting.

Providing a 45-ft. navigational clearance, each new bridge is 1,575 ft. long and consists of 168 segments which were pre-cast in Portsmouth Virginia. Segments were erected using span-by-span and balanced cantilever methods with an overhead, self-launching erection gantry.

The various segment types that encompass each structure included split pier segments, typical span-by-span segments, deviator segments, typical cantilever segments with internal post-tensioning and concrete blisters, and variable depth segments. Individual segments were match-cast using the short line casting method with strict, three level geometry control oversight. Contractor, designer, and owner performed geometry control oversight at the casting yard through “pre-cast” and “as-cast” survey.

Segments were cast and stored at the casting site and then individually delivered to the project, 20 miles away, on a 13-axle hauler through four different municipalities.

Rapid Construction

With a vehicle count of 20,000 ADT, the Lesner Bridge was required to be constructed without reducing capacity during temporary operations, inhibiting the overall construction duration. To help offset longer construction time, three of the four abutment foundations were changed from the designed 4-ft. diameter, 100+ ft. depth drilled shafts to driven piles, a change that resulted in fewer days to construct the foundations and footings and no additional cost. Additionally, footings in the water were constructed using pre-cast seal slab bottom forms. The pre-cast nature of the footing falsework expedited formwork and helped reduce the eight footing installation durations.

SECTION 5 PALMETTO SR826/836 INTERCHANGE (BRIDGES 9, 11, 15 AND 19), MIAMI, FLORIDA

The reconstruction of Section 5 Palmetto SR 826/836 Interchange created safer and less congested travel for 430,000 vehicles traveling through the interchange daily.

This $559 million design-build-finance project involved the construction of an interchange between SR 826 and SR 836, two limited access facilities, as well as the reconstruction of SR 826 at Flagler Street and SR 836 at NW 72nd Avenue interchanges. Capacity improvements included the reconstruction and widening along both SR 826 and SR 836, with the construction of 46 bridges. The project provides new direct connector ramps for major improvements and collector-distributor ramps that eliminated existing geometric and operational deficiencies.

Four high-level precast segmental bridges traverse the heart of the interchange and form the centerpiece of the intersection. These bridges are 46 ft. wide and range in length from 1,100 ft. to 2,450 ft.. Total deck area is 360,718 sq. ft., with 7,764 linear feet for the segmental bridges. The longest span is 266 ft., the tallest pier is 81 ft. and there are 783 total segments.

The curved segmental bridge ramps are the third level of the interchange with radii down to 590 ft. and a maximum superstructure deck height of 95 ft. above ground. All of the bridges are supported on 24-inch pile foundations and reinforced concrete piers and caps.

Rapid Construction

Early on, the design-build teamed realized that the critical path depended on speed of construction of the high-level segmental bridges. Most notable and significant among these design solutions was the decision to build the four segmental bridges “from the top down.”

Use of a 460-ft. self-launching overhead gantry to build the precast segmental bridges, using the balanced cantilever method over the main portion of the interchange, reduced the need for temporary supports on the ground, with segments stabilized off the pier caps.

The casting yard was located 8 miles away from the project and transportation time of the segments ranged from 30 to 90 minutes facilitating the contractor’s rate of production when erecting segments. For segment production, three casting machines were utilized: one for pier and expansion segments, two for typical segments, with no rejected segments.

Equipment and construction had to move quickly, and Quality Control was one of the keys to keeping the project on schedule. The design team understood these challenges and built them into the design of the project.

I-59/I-20 CENTRAL BUSINESS DISTRICT (CBD) BRIDGE REPLACEMENT, BIRMINGHAM, ALABAMA

The existing bridges in the Birmingham CBD were designed and constructed in the 1960's with a 30-year lifespan in mind. This facility was intended to carry 80,000 vehicles per day. Today the structures are some 60 years old and service more than 165,000 vehicles per day. Projections for 2035 estimate traffic will grow to 225,000 vehicles per day.

ALDOT determined it was not possible to re-route the interstate due to environmental justice issues, with an estimated 30 years of planning and a cost of nearly $2 billion it would take to do so.

The infamous "Malfunction Junction" as it was referred to by locals needed to be replaced. By rebuilding the existing bridges, new life could be brought into the facility that rehabilitation and re-decking could not provide. Rehabilitation was also estimated to take a full year longer than the proposed method for complete demolition and reconstruction. The new construction option was also found to be only $25 million more than rehabilitation.

Rapid Construction

With just 14 months allowed for complete closure of I-59/I-20, ABC was a necessity for this project. With a March 21, 2020, deadline for the interstate to be back open to traffic construction had to proceed rapidly.

ALDOT chose to use incentives and disincentives to help speed the construction of the project. For every day the bridges are open before March 21, 2020, the contractor will get a $250,000 bonus with a maximum bonus of $15 million. For every day the roadway opening is delayed after March 21, 2020, the contractor will forfeit $250,000.

In addition, ALDOT chose to require the use of precast segmental bridge construction for the project, including precast superstructure elements. However, the contractor, Johnson Bros Corp, went one step further by choosing to also use precast pier caps and column segments allowing for faster construction time. In all, 2,316 superstructure segments were needed, with each segment being 12 ft. in length, and over 5 miles of segments required.

By the middle of June 2019, about 600 of the 2,316 segments of the new interstate bridges had been erected (about one-quarter of all segments). Typical production for the project included the erection of nearly 400 segments each month. As of July 15, 2019, 1,014 segments had been placed. This is nearly half of all segments and was consistent with the contractor's schedule of 400 segments per month. This production rate was possible not only by using precast but also by working on multiple headings.

Using precast superstructure segments also allowed the contractor and owner to make the choice to re-cast several segments to ensure the bridges had the correct geometric profile – this would not have been possible with a cast-in-place structure. Despite the need to re-cast several segments, the overall project completion was not impacted, another advantage to using precast.

Since this is an ongoing project that will be nearing completion soon, updates on the current status of the project will be provided during the presentation at the International Accelerated Bridge Construction Conference.

ACROW TEMPORARY VERTICAL LIFT BRIDGE ON THE SOUTHERN BOULEVARD (SR 80) BRIDGE REPLACEMENT PROJECT IN WEST PALM BEACH, FLORIDA

Michael J Parciasepe, P.E., Acrow Bridge, (973) 244-0080, mparciasepe@acrow.com

INTRODUCTION

During routine inspection work on the existing Twin Leaf bascule bridge, that carries Southern Boulevard (State Route 80) over the Intracoastal Waterway, the structure was deemed Structurally Deficient. In 2009 a Project Development and Environmental study was conducted with input from the public, as well as local elected officials, and at that time, the Florida Department of Transportation (FDOT) began making plans to replace the existing structure. In addition to its structural issues, the bridge was no longer compliant with current design standards, for vehicular, pedestrian, cycling and marine traffic.

Figure 1- Photo of the Existing Twin Leaf Bascule

In the initial design phases of the new bascule bridge, it was determined improvements had to be made to the flow of vehicular traffic on the bridge and marine traffic below. Special emphasis was given to widen the existing roadway, which would allow for a safer environment for the area's pedestrian and the heavy volume of bicycle traffic, while also reducing cyclist's impact on vehicular traffic. It was also decided the new structure would have an increased vertical clearance over the waterway while the bridge is closed, which would reduce the number of bridge openings required for marine traffic.

REPLACEMENT BRIDGE DESIGN

The significant improvements planned for the new structure also lead to major changes to the existing bridge's substructure. One option was to place the new roadway adjacent to the existing bridge, maintaining traffic on the existing bridge until the new roadway and alignment was completed. This method was used on the Flagler Memorial Bridge replacement project, just north of the Southern Boulevard bridge. However, during construction of the replacement bridge on the Flagler Project, vibrations caused the foundations of the existing bridge to become compromised, requiring a series of closures and repairs, which lead to large, unforeseen monetary and public impacts. It was because of that experience that FDOT chose to avoid that option.

Figure 2 - Rendering of the Replacement Bridge

The agreed-upon solution, developed in collaboration between FDOT and AECOM Tampa, was that a temporary detour structure would be built adjacent to the existing span. After the construction of the temporary roadway, traffic would be shifted onto the detour roadway, allowing the free flow of vehicular, marine and pedestrian/bicycle traffic while the existing structure was demolished and the new structure reconstructed. One portion of this detour roadway would be a moveable structure in order to maintain the marine traffic in the Intracoastal Waterway. When it came time to utilize a temporary moveable structure, FDOT relied on the positive experience from a previous project they completed in St. Augustine, Florida, which utilized a temporary vertical lift bridge provided by Acrow Bridge.

TEMPORARY MOVEABLE BRIDGE DETAILS

AECOM determined the temporary moveable structure would be a vertical lift bridge, but with the horizontal clearance of the navigable channel of 125 feet, set to match the width of the new structure. In order to match the current conditions, clearance under the lift span was to be 14 feet with the lift span in the closed position. It was determined that when fully raised, the main span vertical clearance needed to be 65 feet. Using these parameters, Acrow determined that the lift span structure would need to have a main (lift) span of 170 feet in length to accommodate fenders and pier construction. The roadway would be 30 feet wide and utilize two 12-foot-wide lanes and 3-foot shoulders on each side of the roadway. A 5-foot-wide footwalk would be cantilevered off the North side of the structure. Four 75-foot-tall towers, one at each corner of the roadway would support the cross-head assemblies which house all of sheaves and lift span's counterweights. A gantry structure linked the two cross-head assemblies, and functions as the support for the lift span mechanical drive system and a maintenance walkway linking the East and West towers for maintenance.

Figure 3 - Photo of the Acrow Temporary Lift Span

The 170 ft long lift span is comprised of standard Acrow Panels and floor beams, with an Acrow Truss Construction of Double Double Reinforced Two Super Heavy (DDR2SH). This denotes that there are two truss lines per side of bridge, two stories of trusses per truss line, and that both truss lines are reinforced with super heavy (6 inch) reinforcing chords on top and bottom. Acrow's standard orthotropic steel deck units with a pre-applied epoxy aggregate anti-skid overlay are used to save weight on the lift span. Using the epoxy aggregate coating, rather than asphalt represents a weight savings of 20 lbs./ft² over 2" thick asphalt. The footwalk on the north side of the lift span uses the same epoxy coating as the vehicular roadway. The total weight of the lift span is 466,000 lbs. In June of 2016, the project was awarded to Johnson Brothers Corp., a division of Southland Holdings, Acrow was a subcontractor to Johnson, and in April 2017, construction of the detour roadway began. Acrow's first delivery of components arrived in December, 2017.

By utilizing their prefabricated, pre-engineered modular system to make up a majority of the components in the towers, lift span, and gantry, Acrow was uniquely suited to provide the superstructure required for the temporary vertical lift span in a fraction of the time and at a cost savings, compared to the a conventional truss or girder temporary lift span. The modular design of the structural components also leads to an accelerated construction schedule.

Counterweight System

A counterweight system is used to reduce the amount of power required to raise the lift span, as in most lift bridges. Precast concrete counterweights are used, and installed within the towers. The cross section of the counterweights is such that they fit within the counterweight guides which are installed on the inside of the towers. The counterweights sizes are calculated to set up a 1,000 lb. imbalance, which equates to 108,000 lbs. per corner on the non-footwalk side and 123,000 lbs. per corner on the footwalk side. The counterweights are supported by a six 1 ¼ inch 6x36 WSC Fiber Core ropes per corner. The counterweight ropes run through a sheave cassette system housed within the cross-head assemblies and utilize 12 60-inch McKissick Roll Forged Sheaves per corner.

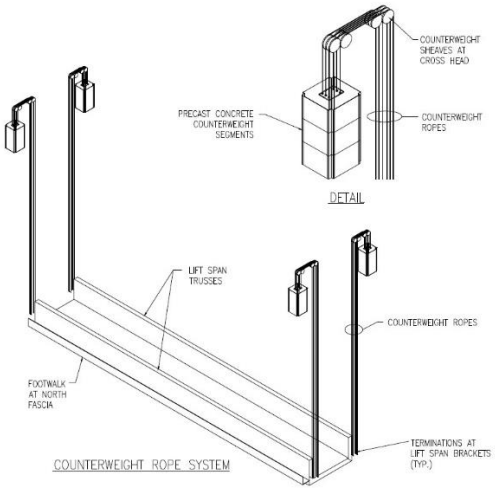

Figure 4 - Sketch of the Counterweight Rope System

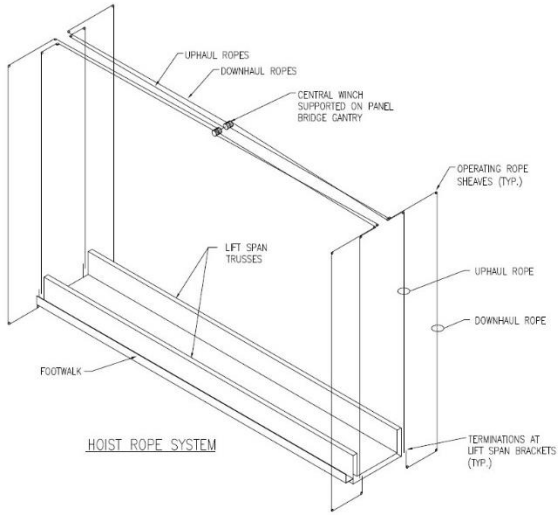

Figure 5 - Sketch of the Uphaul/Downhaul Rope System

Uphaul/Downhaul System

To operate the lift span an uphaul system is used to raise the span and a downhaul system is used to lower the span, even though the system is span-heavy. The low net weight of the span, due to the counterweight system, allows for only a small electric motor to be used to lift the span. The 40 HP at 850 HP motor is connected to a Falk 238:1 reducer which spin s single shaft with four wire rope drums. The mechanical designer and supplier on this project were Steward Machine Co, located in Birmingham, AL.

On each drum there are two 1-inch 6x36 WSC Fiber Core Ropes, one uphaul rope and one downhaul rope. On each of the uphaul and downhaul ropes there is a safety arm in place to protect the bridge and rope system. If the load in the operating ropes is ever 25% over the safety arm trips a limit switch to shut the system down. The safety arm for the downhaul ropes are located in the tower bases, and the uphaul rope safety arms are located in the cross-head assemblies.

CONSTRUCTION SEQUENCE

The Acrow superstructure was delivered and assembled at the Port of Palm Beach, approximately 6 miles north of the site on the Intracoastal Waterway, and then delivered to site via barges. The ability to pre-assemble the lift span off-site significantly reduced the disruption to the public and marine traffic at the site, and also allowed construction to flow more smoothly by distributing the work between two separate locations. In December 2017 the towers were delivered and assembled in the Port of Palm Beach, once completed the towers were loaded onto barges and sent to the jobsite. The base units were installed,

checked for location, plumbness and level and grouted into place. Once the tower bases were placed the rest of the tower sections were added to them, and the counterweight units were installed.

Figure 6 - Photo of the Towers Installed

After the towers and counterweights were installed, the assembly sequence was cross-head assemblies, gantry section, machinery pallet, and lift span. Over the course of 4 months, the Acrow Bridge was fully assembled and installed. During a 5-day channel closure in April, 2018, the Lift Span was installed and commissioned so the contractor could operate it as required. This 5-day closure was the only major disruption to vehicular or marine traffic. The temporary lift span was opened to traffic in May of 2018, and will be removed upon completion of the replacement bascule bridge construction.

Figure 7 - Current Photo of the Project

Innovative Bridge Designs that Accelerate Construction using Precast Concrete

Gregg A. Reese, P.E., Modjeski and Masters, (303) 933-9114, gareese@modjeski.com
Andrew D. Mish, P.E Modjeski and Masters, (303) 933-9114, admish@modjeski.com

The use of precast concrete components in bridge construction in the United States has steadily advanced in response to a desire for greater economy, enhanced durability and lower maintenance costs. Precast concrete has primarily been used for conventional beam and deck slab bridges and segmental bridges. Other applications of precast concrete elements used for the construction of bridge projects include; full and partial depth deck panels, retaining walls, arches, pier columns and pier caps. Precast concrete bridge elements are typically designed as mildly reinforced, pre-tensioned or post-tensioned. Additionally, they may be designed with a combination of mild reinforcement, pre-tensioning, and post-tensioning for both temporary and final service conditions. Segmental and spliced girder bridges have been used to achieve span lengths suitable for almost all kinds bridge applications and curved precast has been recently used for complex interchanges.

The development of new methods and materials using precast concrete has enabled designers and constructors to explore innovative solutions that allow construction with difficult site constraints, increase economy, improve quality, and shorten the time necessary to construct projects. The popularity of Accelerated Bridge Construction has further stimulated engineers and constructors to develop additional creative solutions to reduce construction time and minimized interference to the travelling public during construction. Prefabricated Bridge Elements and Systems (PBES) made with precast concrete have been used to simplify and streamline construction operations and reduce the need for extensive temporary works and field operations. The use of PBES creates the opportunity to perform multiple operations simultaneously with the fabrication cycle of the precast elements. This enables contractors to shorten the duration of disruptive operations such as demolition, lane shifts and traffic detours.

This presentation will feature several case studies that illustrate several concepts where precast concrete PBES have been used to accelerate the construction process and reduce impact to the public. Projects using PBES as the primary methodology to achieve ABC are typically constructed by local Contractors using conventional means and methods without the need for specialized equipment or expertise. Further, the projects that will be presented were developed in Alternative Delivery System environments, such as Design/Build, CMGC, Contractor Alternate Design or Value Engineering Proposal. For this reason, the Contractor was instrumental in the development of design concepts with the Design Engineer. This process has created an approach to bridge design that will feature in this presentation. The design approach will be referred to as “Constructability Based Bridge Design.”

Constructability Based Bridge Design

Constructability Based Bridge Design (CBBD) is an approach that focuses on design concepts that are developed around a proposed construction scheme and assumed means and methods. The primary focus of CBBD is to create designs that first concentrate on ease of construction and then hone in on material efficiency. The case studies in the presentation will feature bridge projects with a variety of different designs that used precast concrete elements to enhance constructability which resulted in more rapid construction and reduced impact on the traveling public.

Constructability Based Design relies on the following processes:

- Project requirements are considered.
- Input is sought from various Stakeholders.
- Key Objectives are identified which focus on how the bridge will be built before design begins.
- Reduced impact on existing traffic is considered as a valuable result of the process.

- Design solutions are developed through an iterative and collaborative process.
- Design concepts and details are finalized based on streamlined means and methods.
- Compliance with Project Design Requirements is satisfied.
- Design Documents are prepared.
- Design Engineering support continues through construction.

Constructability Based Design reflects the following principals:

- Design must incorporate the Construction Means and Methods.
- Design as many elements as possible that can be prefabricated.
- Create opportunities for simultaneous operations and avoid designs that create sequential operations whenever possible.
- Connections should be designed for ease of construction.
- Larger tolerances in connections result in more predictable and desirable outcomes.
- Keep it Simple. Complexity is sometimes necessary but should be avoided if possible.
- Repetition in design details and processes is advantageous.
- Avoid exotic materials unless they create construction advantages.
- Access for construction, fabrication or installation is essential.
- Issues such as shipping, handling, erection and demolition must be considered.
- Ease of Construction typically results in better quality in less time.

Precast Concrete Designs

The paper will present information on existing and completed projects where precast concrete elements, both simple and complex, have been used during construction to reduce time and impacts to existing traffic. Projects will feature innovative designs that use both common elements such as piers, pier caps and precast deck elements and more complex projects that feature spliced and curved precast girders or composite straddle caps to simplify erection and eliminate temporary shoring. Multiple projects representing a wide range of bridge designs will be featured to illustrate these concepts.

Substructure Construction is typically performed on or near existing roadways. By designing precast concrete with a Constructability Based Bridge Design approach, critical operations can be done off the roadway or during specific and limited lane closures. This creates an opportunity to perform critical operations which minimize the impact to existing roadways and/or delay demolition of structures that are to be replaced.

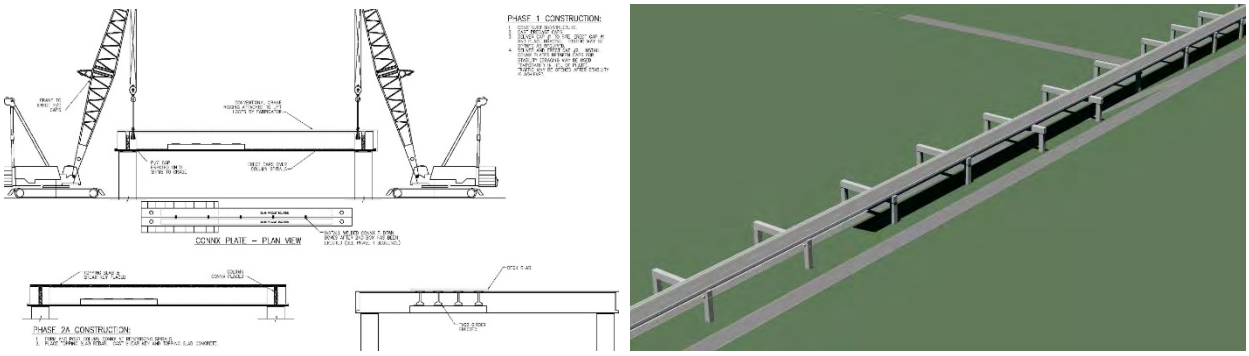

Precast Straddle Bents Eliminate Temporary Shoring and Ramp Closures

Precast substructure and superstructure elements can be prefabricated and stockpiled prior to being needed for construction. Constructible Designs can enable the Contactor to begin operations with an accelerated erection scheme that reduces time necessary for detours or roadways closures in order to

erect areas the substructure and superstructure. The staging of both substructure and superstructure construction is considered during the design process in order to create an efficient sequence of events where one operation is rapidly followed by the next until the new structure is completed. This approach also seeks to limit interference between areas of the project and creates the opportunity for multiple, simultaneous operations which greatly optimizes the overall construction process.

All Bridge Piers are Precast at Job Site Prior to Start of Phased Construction

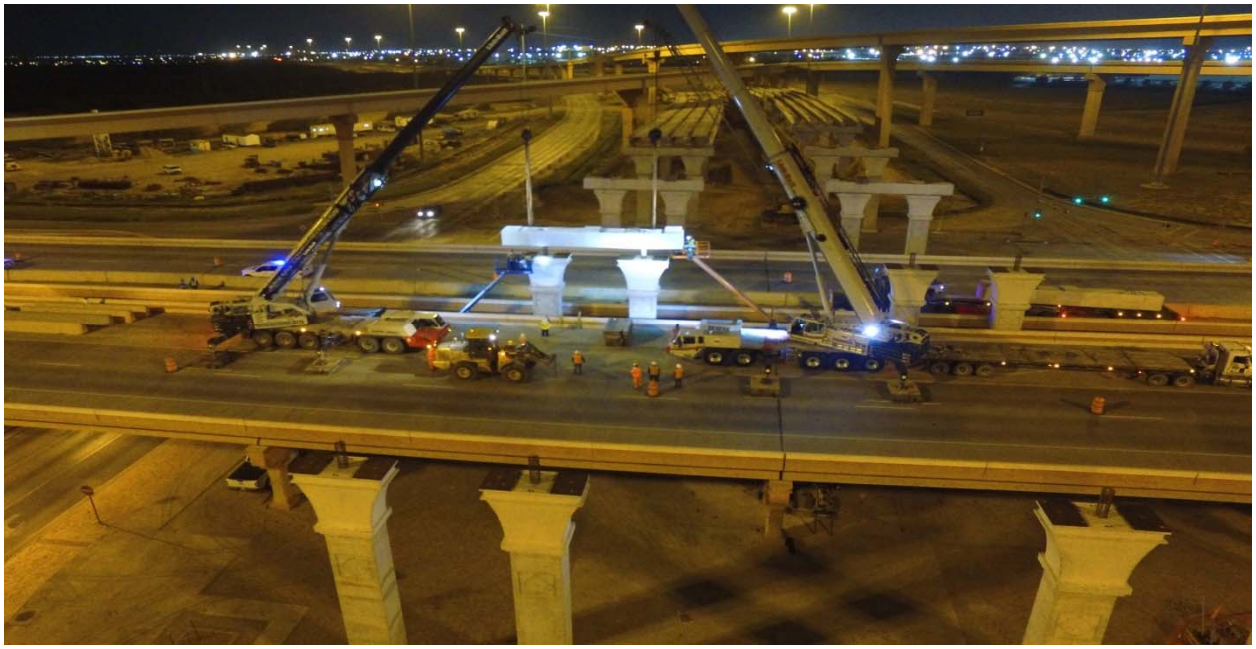

Simultaneous Construction of Precast Elements Streamlines Bridge Erection

This presentation will feature completed projects that were successfully constructed on time and under budget using precast concrete in different situations and PBES methods to achieve ABC results. The presentation will also feature projects that are currently under construction and design concepts that were developed to maximize the use of precast concrete, PBES and Constructability Based Bridge Design.

QUICK-INSTALLATION EXPANSION JOINT SOLUTIONS FOR FASTER BRIDGE CONSTRUCTION AND MORE EFFICIENT MAINTENANCE

Joseph Bilotti, Danilo Della Ca' & Tiago Destefani, Mageba USA, (212)644-3335, info@magebausa.com

INTRODUCTION

Expansion joints that can be quickly installed on a bridge offer a potentially very significant advantage over other types – especially where an existing structure's joints need to be replaced with minimum disruption to traffic, but also where every step in the construction of a new bridge – or parking deck, airport ramp, etc. – must be accelerated to avoid any delays to completion. A number of expansion joint solutions that facilitate relatively quick installation are presented below, with reference to a range of expansion joint types. Thanks to the implementation of solutions like these, the time required for bridge construction and maintenance work may be minimized – at least insofar as it relates to a structure's expansion joints.

THE SINGLE GAP JOINT WITH POLYMER CONCRETE ANCHORAGE

Where the movements to be facilitated by an expansion joint are small (typically 80 mm or less, or somewhat more if equipped with noise-reducing surfacing), single gap joints often present an optimal solution, being very strong and durable, absolutely watertight and exceptionally accommodating of multi-axial deck movements and rotations. One type of single gap joint, shown in Figure 1, is ideally suited to use in bridge refurbishment projects, minimising the amount of break-out required when installed to replace an old joint. The edge profiles of the joint are anchored in high-strength polymer concrete, which is strong enough to secure them to a suitable substructure without reinforcement. This enables their dimensions, and in particular their depth, to be greatly reduced – so much so, in fact, that this type of joint can typically be installed within the depth of a bridge's asphalt surfacing. This means that much less of the existing structure must be broken out (Figure 1), resulting in less construction effort, less use of materials and less noise and dust nuisance. Indeed, breaking out of more than the surfacing may be highly undesirable or impossible in certain cases, e.g. where a girder is in the way or where concrete reinforcement bars would need to be cut, weakening the structure. Whatever the existing joint type, it is only necessary to remove the joint to a depth of approximately 60 - 80mm (likely to involve no breaking out of concrete or placing of reinforcement) and ensure a suitable subsurface to which the polymer concrete can bond. As well as being much stronger than regular concrete, the polymer concrete used also cures very quickly, gaining the strength needed to support traffic loading within a matter of hours (typically four to six, depending on temperature and humidity) – further reducing the impact on traffic. And the joint can be equipped, if desired, with noise-reducing surface plates. Such joints can thus play an important role in the rehabilitation of many of the countless bridges around the world that require renewal of small movement joints. Further details of this type of joint, its installation and its benefits are provided by Spuler and Moor (1).

Figure 1. A Tensa-Crete single gap joint with anchorage in high-strength polymer concrete (left) can be installed to replace an existing joint of any type and similar movement capacity, often requiring only removal of the old joint and asphalt surfacing and thereby avoiding the need to break out and reinstate concrete etc.

THE POLYURETHANE (PU) FLEXIBLE PLUG EXPANSION JOINT

Flexible plug expansion joints, which create a completely closed, absolutely flat driving surface across a structure's movement gap, offer various benefits over other small-movement expansion joint types. The continuous, flexible surface results in high driver comfort and very low noise under traffic, while also eliminating discomfort and safety risks for pedestrians and cyclists. Furthermore, the way the joints are constructed, by pouring freshly mixed material in situ, facilitates transport and handling and makes expansion joints installable in sections, lane by lane, with any desired shape or longitudinal profile (e.g. with intersections or upstands). However, flexible plug expansion joints made from traditional asphaltic materials have long been plagued by durability problems, especially at low or high temperatures. Inconsistent quality due to improper mixing and incorrect temperature during installation (high temperatures required) also frequently cause problems. To overcome such shortcomings while retaining the aforementioned benefits, modern flexible plug expansion joints such as that shown in Figures 2 and 3 have been developed. This type has a polyurethane surface, which offers a number of substantial advantages over the traditional bituminous type. It offers greatly improved strength, elasticity and durability, resulting in much less maintenance and far more reliable watertightness. Installation is far easier and less prone to error, with the two-component compound being mixed at ambient temperatures. Of course, avoiding the need to break out and replace superstructure concrete or steel in most cases (since the depth of the expansion joint is typically less than that of any bituminous surfacing) makes installation to replace an existing expansion joint much quicker and easier. For these reasons and others, this type of joint should be considered for use in bridge construction where low-movement expansion joints are needed, and, in particular, in bridge maintenance. Further details are provided by Moor et al (2).

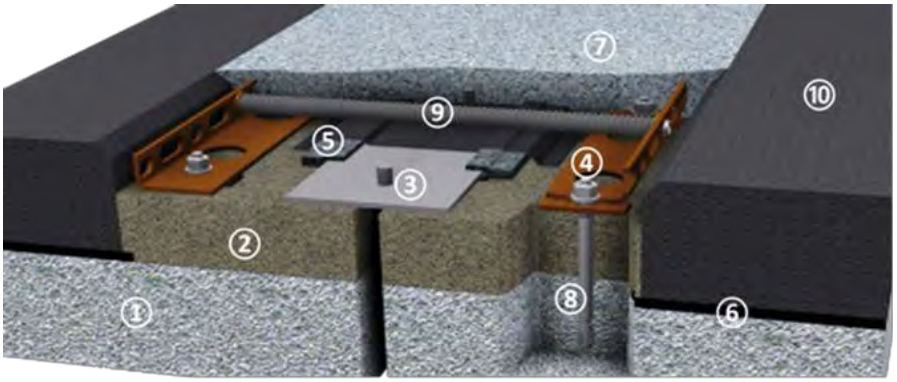

1 Main structure
2 Polymer concrete base
3 Bridge plate across gap
4 Perforated steel angle
5 Sponge rubber
6 Bridge waterproofing
7 Special PU material
8 Anchoring
9 Stabilizing bar if needed
10 Road surfacing

Figure 2. Illustration showing the main elements of the described Polyflex-Advanced PU flexible plug expansion joint

Figure 3: Installation to replace an existing joint of any type is simplified by the fact that the new joint can typically be placed within the depth of a bridge's surfacing, avoiding the need to break out (and replace) concrete or steel (left), and the PU material used offers exceptional geometrical flexibility (right)

QUICK-EXCHANGE DESIGN OF MODULAR EXPANSION JOINTS

The modular expansion joint, which divides a superstructure's movement gap into a number of smaller individual gaps (each typically accommodating movements of up to about 80 mm), is often an ideal expansion joint solution where medium or large movements must be accommodated. However, installation of a new joint on an existing structure traditionally required an entire existing expansion joint to be removed, with breaking out of deck material (concrete etc.) and subsequent reconstruction of the connecting superstructure complete with waterproofing membrane. A way of reducing effort, time and disruption to traffic, by retaining the permanently anchored (e.g. concreted-in) parts of the existing joint (the so-called "box-in-box" method) is described by Spuler et al (3). But if the existing expansion joint has been designed to facilitate easy renewal (the so-called "Quick-Ex" (quick exchange) approach), the time and effort required when the time comes to renew the joint will be very much reduced. The design of a "Quick-Ex" modular joint will enable, when required, the main mechanical structure, consisting primarily of the centerbeams that form the driving surface and the support bars beneath, to be easily replaced without any need for cutting or welding on the joint or any impact on the main structure. It will not be necessary to break out concrete, or damage asphalt or deck waterproofing, and therefore will also not require placing of these materials to reconstruct the deck. The moving parts of the joint are simply unscrewed, lifted out and replaced (Figure 4) – far more quickly than would otherwise be possible, with an absolute minimum of impact on traffic. Further details are provided by Adam et al (4).

Figure 4. The "Quick-Ex" design of the Tensa-Modular joint enables the joint's main mechanical structure, consisting of its centerbeams and the support bars beneath, to be easily replaced, with the steel plates along both sides of the joint simply unscrewed to make this possible

CONCLUSIONS

Expansion joint solutions such as those presented, which facilitate expedited installation, can support faster bridge construction and more efficient maintenance. Of course, non-standard solutions can also be developed to meet the specific needs of any particular project, if discussed in good time with a capable supplier. Therefore, where time is of the essence in bridge construction or maintenance projects, cleverly developed and carefully selected expansion joint solutions can support that objective where appropriate.

REFERENCES

(1) Spuler, T. and Moor, G. Renewal of small movement expansion joints with minimum break-out and time requirements. *Proc. 6th International Conference on Bridge Maintenance, Safety and Management (IABMAS 2012)*, Stresa, Italy. 2012.

(2) Moor, G., Baillés, B. and Pakniat, P. Modern flexible plug expansion joints with polyurethane surface – far superior to the traditional asphaltic type. *Proc. 10th International Conference on Short and Medium Span Bridges*, Quebec City, Quebec, Canada. 2018.

(3) Spuler, T., Hoffmann, S. and Savioz, P. Sustainability in action – Expansion joint renewal with focus on retention and re-use. *Proc. 19th IABSE Congress*, Stockholm, Sweden. 2016.

(4) Adam, S., Moor, G. and Hoffmann, S. The quick-exchange expansion joints of the Köhlbrand Bridge in Hamburg. *Proc. 40th IABSE Symposium*, Nantes, France. 2018.

SYSTEM PERFORMANCE OF A PRECAST BRIDGE INCORPORATING FULL-DEPTH DECK PANELS AND PRESTRESSED INVERTED BULB-TEE GIRDERS

Mostafa Tazarv, Ph.D., P.E., South Dakota State University, (605)688-6526, mostafa.tazarv@sdstate.edu
Michael Mingo, MS, E.I.T, Burns & McDonnell, (605)688-5427, mmingo@burnsmcd.com
Nadim Wehbe, Ph.D., P.E., South Dakota State University, (605)688-4291, nadim.wehbe@sdstate.edu

ABSTRACT

The South Dakota Department of Transportation (SDDOT) currently uses prestressed precast double-tee girder bridges on many of its county roads because they are cost-effective and fast in construction. Current bridges are designed for a service life of 75 years. However, some double-tee bridges need total replacement after 40 years of service. Alternative durable prefabricated bridge systems are needed to provide more options to local governments. The present study was carried out to investigate the feasibility and performance of a new bridge system using precast full-depth deck panels and prestressed inverted bulb-tee girders. A full-scale 50-ft long by 9.5-ft wide bridge representing two interior girders from a prototype bridge was tested under fatigue and strength loading. The bridge was first tested under 500,000 cycles of the AASHTO Fatigue II loading using a point-load applied at the midspan. Next, the performance of transverse joints was evaluated by applying 150,000 AASHTO Fatigue II load cycles using two point loads applied adjacent to the middle panel transverse joints to maximize the shear transfer. Stiffness tests were performed at every 50,000 load cycle interval for both fatigue tests. No significant damage beyond shrinkage cracks was observed through the entire fatigue testing, and the overall bridge stiffness did not deteriorate. Finally, the proposed bridge system was monotonically loaded to 263 kips to investigate the ultimate capacities. It was found that the first crack loading magnitude was higher than the equivalent AASHTO Service and Strength I limit states indicting sufficient performance. Based on the construction, testing, and cost analysis, it was concluded that the proposed bridge system is a viable alternative to the double-tee girder bridges. The presentation discusses the design and construction methods and highlights the findings of the experimental study.

INTRODUCTION

The South Dakota Department of Transportation (SDDOT) currently uses prestressed precast double-tee girder bridges on many of its county roads because they are cost-effective and fast in construction. Current bridges are designed for a service life of 75 years. However, some double-tee bridges need total replacement after 40 years of service. Alternative durable prefabricated bridge systems are needed to provide more options to local governments. The present study was carried out to investigate the feasibility and performance of three bridge systems suitable for local roads: (i) precast full-depth deck panels (FDDPs) supported by prestressed inverted bulb-tee girders (Tazarv et al., 1), (ii) glulam timber girder bridge, and (ii) glulam timber slab bridge (Tazarv et al., 2). The extended abstract and the presentation discuss the design and construction methods and highlight the findings of the experimental study of the first alternative.

TEST SPECIMEN AND RESULTS

A full-scale 50-ft long by 9.5-ft wide bridge (**Fig. 1**) representing two interior girders from a prototype bridge (**Fig. 1a**) was tested under fatigue and strength loading. The test specimen was consisted of two prestressed inverted bulb-tee girders and five 8-in. think FDDPs. The deck panels were connected to the girders through hidden pockets (**Fig. 1c**), which were filled with conventional grout, and full-depth (open) pockets, which were filled with latex modified concrete (LMC). Double-headed and inverted U-shape studs were respectively used in the hidden and open pockets. The deck panels were connect transversely using a female-to-female joint (**Fig. 1e**) and longitudinally incorporating dowel bars (**Fig. 1f**).

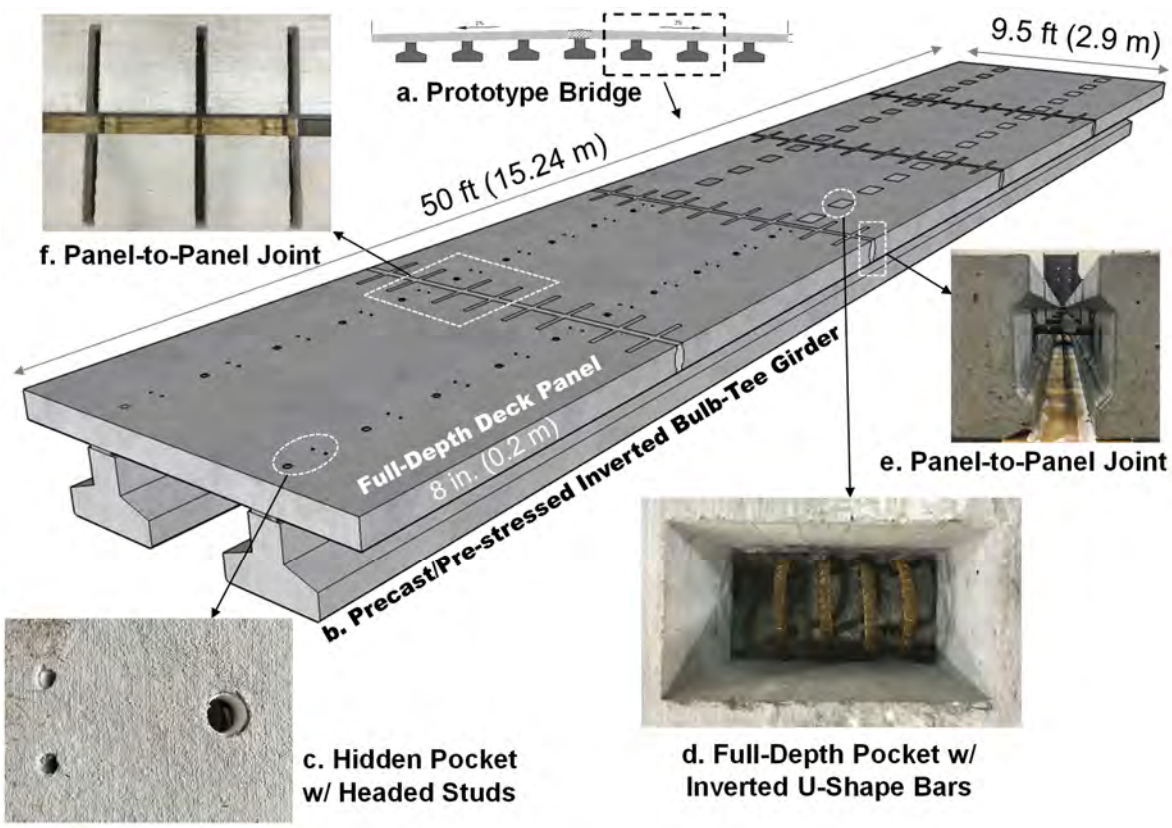

Figure 1. Full-Scale Fully-Precast Bridge Test Specimen (1)

The bridge was first tested under 500,000 cycles of the AASHTO Fatigue II loading (equivalent to 91 years of service) using a point-load applied at the midspan. Next, the performance of transverse joints was evaluated by applying 150,000 AASHTO Fatigue II load cycles (equivalent to 27 years of service) using two

point loads applied adjacent to the middle panel transverse joints to maximize the shear transfer. Stiffness tests were performed at every 50,000 load cycle interval for both fatigue tests.

No significant damage beyond some shrinkage cracks was observed throughout the entire fatigue test. Furthermore, the bridge stiffness did not deteriorate under the fatigue testing (**Fig. 2**) confirming that all joints performed satisfactorily. Subsequently, the bridge was monotonically loaded to 263 kips to investigate the ultimate capacities (**Fig. 3**). It can be seen that the first crack loading magnitude was higher than the equivalent AASHTO Service and Strength I limit states indicting sufficient performance.

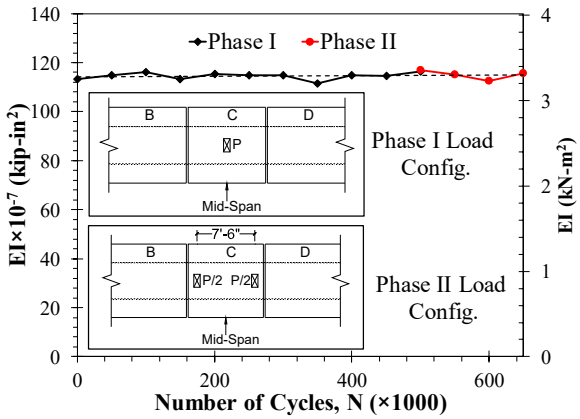

Figure 2. Stiffness Test Results (1)

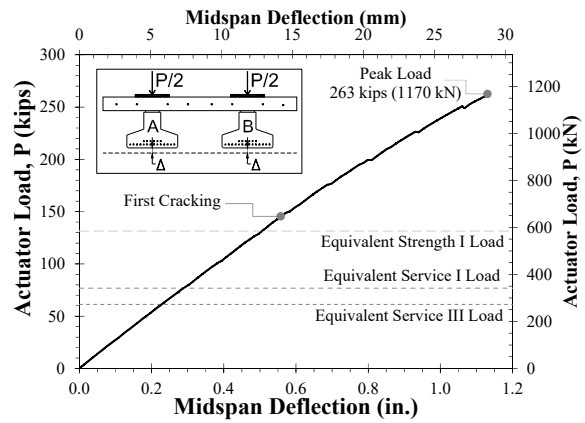

Figure 3. Strength Test Results (1)

A cost analysis was performed for the superstructure of prototype proposed precast and double-tee bridges, each 50-ft long and 34.5-ft wide. The cost per deck area of the proposed precast system was 10% higher than that for the double-tee bridge.

CONCLUSIONS

Based on the construction, testing, and cost analysis, it can be concluded that the proposed bridge system is a viable alternative to double-tee girder bridges. The presentation discusses the design and construction methods and highlights the findings of the experimental study.

ACKNOWLEDGEMENTS

The contents of the present study, which was jointly funded by the South Dakota Department of Transportation (SDDOT) and the US Department of Transportation (USDOT) through the Mountain Plains Consortium (MPC) - University Transportation Center (UTC), reflect the views of the authors who are responsible for the facts and accuracy of the data presented herein. The contents do not necessarily reflect the official views or policies of the South Dakota Department of Transportation, the State Transportation Commission, or the Federal Highway Administration. This document does not constitute a standard, specification, or regulation. The authors would like to thank Gage Brothers Concrete Products and Headed Reinforcement Corporation for their support and contributions throughout the project.

REFERENCES

1. Tazarv, M., Mingo, M., Wehbe, N. (2019). “System Performance of a Precast Bridge Incorporating Full-Depth Deck Panels and Prestressed Inverted Bulb-Tee Girders,” Journal of Bridge Engineering, ASCE, DOI: 10.1061/(ASCE)BE.1943-5592.0001426, Vol. 24, No. 6, 13 pp.

2. Tazarv, M., Carnahan, Z., Wehbe, N. (2019). “Glulam Timber Bridges for Local Roads,” Engineering Structures, DOI: 10.1016/j.engstruct.2019.03.012, Vol. 188, pp. 11-23.

IS ABC A GOOD FIT?
DEVELOPMENT OF THE ILLINOIS DEPARTMENT OF TRANSPORTATION'S ACCELERATED BRIDGE CONSTRUCTION EVALUATION METHOD

Eric J. Ozimok, S.E., P.E., AECOM, 312-373-6794, eric.ozimok@aecom.com

Patrik Claussen, S.E., P.E., Engineer of Bridge Planning, Illinois Department of Transportation, 217-782-2125, patrik.claussen@illinois.gov

ABSTRACT

The Illinois Department of Transportation (IDOT) has always strived to build bridges efficiently and the idea of accelerating bridge construction is not a new concept within the state. Through careful planning and the Federal Highway Administration's Every Day Counts initiative, the Department hand-picked several opportunities for Accelerated Bridge Construction (ABC). These demonstration projects were highly successful and helped the Department understand the advantages and disadvantages associated with ABC technologies. Based on the lessons learned from these projects and the potential economic and safety improvements utilizing ABC, the Department desired to develop an Accelerated Bridge Construction evaluation method for future design projects within their inventory. The main goal of the evaluation is to filter bridge projects and identify which structures are good fits for accelerating construction by interviewing the project information so to speak. This paper and presentation will provide a brief summary of the Department's successful demonstration projects; provide a basic overview of the newly developed ABC rating scorecard and guidelines; and provide a look ahead into the Department's design and construction planning. By gathering enough knowledge about the site during planning, IDOT hopes to nail the interview and find the right ABC candidates for the job.

THE ILLINOIS DEPARTMENT OF TRANSPORTATION

The Illinois Department of Transportation (IDOT) has been serving the residents of Illinois for more than a century by implementing programs to maintain and improve the state's transportation infrastructure. As long as there have been cars, highways, and air traffic, there has been an Illinois transportation agency (1). The Department has impressively developed one of the largest multi-modal transportation systems in the country that includes highways and bridges, airports, public transit, rail freight and rail passenger systems (1). As the fifth largest state in the US, IDOT sees more than 100 million visitors annually, maintains the third largest interstate network, and has the third largest inventory of bridges in the country (1)(2). Since the Department covers the entire state from the Mississippi river though rural Illinois to the third largest city in the country, IDOT is constantly seeking ways to proactively improve its infrastructure and meet the needs of its customers (1).

To accomplish this goal, the Department is headed by the Secretary of Transportation who works closely with the Governor's Office and the Illinois General Assembly. The Secretary of Transportation oversees 10 offices including the Office of Planning and Programming and the Office of Highway Project Implementation. Each of these offices is then divided into multiple bureaus that maintain the states 5 transportation regions and 9 transportation districts. With the central office headquartered in Springfield, IL, this organizational structure is responsible for the planning, construction, operation and maintenance of Illinois' extensive transportation network (1). Their mission is to provide safe and cost-effective transportation for the state of Illinois (1).

WHY ACCELERATED BRIDGE CONSTRUCTION?

The state of Illinois has a population that exceeds 12 million people with over 9 million licensed drivers that travel 108 billion miles along the state's transportation system (2). These travelers cross over 26,000 bridges throughout the state with almost 8,000 of these bridges under the Department's jurisdiction (2). The average age of the Department's bridges is 42 years old with varying condition states (1). The most recent infrastructure report card from the American Society of Civil Engineers (ASCE) stated that approximately 8.6% of the bridges in Illinois are structurally deficient (4). As a result, there is a real need to build better, safer and more efficient bridges.

IDOT's main goal is to ensure that destinations are reached in the safest, quickest and most cost-effective manner (1). IDOT does this very well but is striving to be more proactive to meet the demands of its aging infrastructure while working within the constraints of available funding sources. As a result, IDOT is looking for ways to bring the Illinois transportation infrastructure into the 22nd Century and innovation is one the key focal points (1). One of the recommendations from the ASCE Report Card was to include innovation in both design and construction of bridges to improve the safety, economy, durability, constructability and sustainability of the state's infrastructure (4). IDOT was already ahead of the curve and was investigating ways to implement innovation through the use of accelerated bridge construction. Accelerated Bridge Construction (ABC) is defined as bridge construction techniques that use innovative planning, design, materials or construction methods in a manner to specifically reduce the onsite construction time and mobility impacts that occur when building or replacing bridges (5). ABC technologies have many advantages over conventional construction such as enhanced quality and accelerated project delivery but more importantly, ABC provides a safer way to build bridges with less impact to the users. The drawback to ABC is the high initial cost and the potential for more planning and design coordination as well as construction lead time. Also, there could be conflicting priorities within an agency such as allocation of limited funding as well as balancing "real" costs with less tangible "user delay" costs (7). These drawbacks could make it difficult to sell ABC as the recommended choice.

Accelerated Bridge Construction is not a new technology and has been used for years throughout Illinois. Several ABC technologies have been used at various locations on the IDOT system including relocation methods such as lateral bridge slides, float-ins and lift-ins, and prefabricated bridge elements including deck panels, abutment and pier caps, wingwalls, parapets, deck beams, and culverts (7). IDOT has also utilized ABC materials including ultra-high performance concrete (UHPC) and high strength non-shrink grout, as well as ABC construction methods such as specialty forming and pre-assembled systems (7). However, IDOT wanted to do more with ABC in a responsible and economic manner. Their goal was to continue to develop ABC methodologies and practices. As a result, the Bureau of Bridges and Structures, which develops the structural design policies and practices for the Department, decided to implement ABC on several demonstration projects throughout the state. The demonstration projects highlighted two elements of ABC, slide-in bride construction and full depth precast deck panels with UHPC joints.

DEMONSTRATION PROJECTS

The following demonstration projects were programmed and constructed:

- IL-115 over Gar Creek bridge (SN 046-0152) – lateral bridge slide
- US 40 over West Fork Shoal Creek bridge (SN 003-0063) – lateral bridge slide
- Peoria Street over I-290 bridge (SN 016-1708) – UHPC and precast deck panels
- Campground Road over I-57 bridge (SN 041-0054) – UHPC and precast deck panels

These demonstration projects helped the Department evaluate the feasibility and benefits of ABC as well obtain a better understanding of the time and cost of construction. The lessons learned from these projects and the potential economic and safety improvements utilizing ABC helped drive policy decisions.

Due to the successes with these projects, the Department decided to move forward with development of a full ABC evaluation method for future design projects within their inventory. The main goal of the ABC evaluation was to filter bridge projects and identify which structures were good fits for accelerating construction. IDOT desired to make ABC consideration a part of its regular practice and identify a more realistic way to use ABC.

US 40 over West Fork Shoal Creek bridge (SN 003-0063)

IDOT decided to design their first bridge slide demonstration project in-house to allow more control of the process and gain more experience from the project. Based on the contract documents, the project is located in District 8, Bond County. The existing three-span steel bridge was replaced with a 108-ft-long, 35-ft-wide, single-span steel plate girder with 8" composite deck supported on cast-in-place (CIP) concrete semi-integral abutments (7). The new bridge superstructure was constructed next to the existing bridge and then rolled into place during a 21-day closure (7). The closure allowed for demolition of the existing structure, construction of new CIP abutments, and full slide of the new structure. The contractor was also required to produce a time-lapse video during the slide.

Project Highlights:

- Contractor: Keller Construction
- Designer: IDOT in-house design
- ABC Construction Engineering: Thouvenot, Wade and Moerchen
- Construction Inspection: IDOT D8
- Year Constructed: Summer 2017
- Road Closure Duration: 21 days
- Lateral Bridge Slide
- CIP abutments
- CIP approach slabs
- 8-hour time limit to laterally move the structure into position
- Conventional jacking system

Lessons learned:

Alternative methods were not allowed per the contract documents and the actual slide method was left up to the contractor. IDOT was concerned about torsion and deck cracking and required a detailed check after each movement during the slide. In addition, IDOT had provided a suggest construction sequence in the plans which showed the permanent structure being built on temporary supports to the south of the existing structure due to overhead power lines on the north side. However, the contractor elected to build the permanent structure to the north and deal with the overhead lines since the northern side of the bridge provided better access. Access was a key component to the contractors suggested construction procedure and even though switching sides required a unique sliding platform and had height restrictions, the contractor chose to go with the easier access path.

IL-115 over Gar Creek bridge (SN 046-0152)

IDOT elected to construct the new bridge at Illinois (IL) 115 over Gar Creek using the lateral slide (slide-in bridge construction) method with different requirements than the US 40 over West Fork Shoal Creek Bridge. They decided to use a tighter closure window and allow the use of precast elements. Based on the contract documents, the project is located in District 3, Kankakee County. The existing single-span precast box beam bridge was replaced with an 82-ft-long, 36-ft-wide, single-span rolled steel beam with 8" composite deck supported on precast concrete semi-integral abutments (6). The new bridge superstructure was constructed next to the existing bridge and then rolled into place during a 72-hour roadway closure (6). This project's slide-in-bridge-construction technique was highlighted by the FHWA's Every Day Count's program and IDOT received an AID grant from FHWA.

Project Highlights:

- Contractor: Tobey's Construction and Cartage, Inc.
- Designer: Milhouse Engineering
- ABC Construction Engineering: WHKS and Company
- Construction Inspection: IDOT D3
- Year Constructed: Fall 2017

- Road Closure Duration: 72 hours
- Liquidated Damages: $2000/hour
- Lateral Bridge Slide
- Precast abutment, wingwall and full depth precast approach slabs
- 4 hours to jack/slide/set - hydraulic roller jack system

Lessons learned:
The contractor gave a presentation as part of the 2018 ABC-UTC Webinar titled *Contractor Perspective on ABC – SHRP2 R04 Spotlight on IL 115 Gar Creek Bridge Lateral Slide* and offered valuable feedback during a questions and answer period. The contractor completed the bridge slide within the 72-hour window and had stated that the plans were developed to an acceptable level so that an alternative design would not have been beneficial (6). Bridges slides are fast and predictable and even though there were guide track complications and hydraulic roller binding during construction, the 72-hour window was a reasonable window to complete the work (6).

Peoria Street over I-290 bridge (SN 016-1708)

As a part of IDOT's Jane Byrne Interchange Project in the city of Chicago, the Peoria Street Bridge replacement over I-290 and the Chicago Transit Authority (CTA) utilized precast concrete deck panels with UHPC joints. The designer on the project had identified the Peoria Street Bridge as a possible opportunity for innovation since the structure would be completely closed during replacement and did not carry vehicular traffic (8). Three alternatives were proposed to IDOT during planning: precast deck panels with internal post-tensioning, AccelBridge proprietary system and precast deck panels with UHPC joints (8). IDOT selected precast deck panels with UHPC joints to gain valuable experience with the UHPC material (8). This project was the first use of these combined technologies in the state of Illinois. The existing structure was replaced with a 3-span, continuous steel plate-girder bridge with a total length of 273'-0" and a bridge width of 56'-4" (8). 52 precast deck panels were utilized and resulted in 20 different panel designs to accommodate the CTA and various bridge appurtenances (8). A latex concrete overlay was provided on the top of precast deck panels to meet aesthetic requirements (8).

Project Highlights:
- Contractor: Kiewit Construction
- Designer: TranSystems
- Construction Inspection: IDOT D1
- Year Constructed: 2015
- Pedestrian Bridge for University of Chicago (UIC) campus
- Chicago Transit Authority (CTA) station attached to bridge
- Complete closure
- State's first precast deck panel bridge with UHPC joints
- Shear pockets filled with non-shrink grout
- Transverse and Longitudinal joints filled with UHPC

Lessons Learned:
Since this project was the first use of these combined technologies in the state of Illinois, bid prices for the precast deck panels and UHPC were about 75% more than a conventional CIP deck (8). However, if this technology would be used in more applications throughout the state, local contractors would become more comfortable with the construction and the unit price would most likely decrease (8).

Campground Road over I-57 bridge (SN 041-0054)

From the success of the Peoria Street bridge project and as part of the FHWA Every Day Count Initiative-4 which focused on UHPC, IDOT decided to design the Campground Road Bridge reconstruction with precast concrete deck panels with UHPC joints. The project was designed in-house to again allow more control of the process and gain more experience from the project. The bridge could only be closed during the summer months, so the project was an ideal candidate for accelerated construction (7). The project is located in District 9, Jefferson County and consisted of replacing the existing steel superstructure. The existing structure consisted of a 4-span superstructure with 6½" concrete deck and bituminous overlay supported by hammerhead piers and stub abutments on steel H-piles. The existing substructure remained, and the superstructure was replaced with a new steel superstructure with 8" full depth precast

panels with UHPC joints. The panels spanned the entire width of the bridge and were overlaid with a 2¼" hot-mix asphalt surface course. IDOT received an AID grant from FHWA for this project.

Project Highlights:

- Contractor: Kilian Construction
- Designer: IDOT in-house design
- Construction Inspection: IDOT D9
- Year Constructed: Summer 2018
- 2-month closure window
- Precast deck panel bridge with UHPC joints
- Full length Shear channels filled with non-shrink grout
- Transverse joints filled with UHPC

Lessons Learned:

A lesson's learned meeting was held after construction was complete to identify the positives and negatives of using the precast concrete deck panels. The contractor, FHWA, IDOT construction, IDOT Bureau of Materials and IDOT Bureau of Bridge and Structures were all in attendance. IDOT had asked the contractor what worked well and what didn't work well on the project and requested feedback. The contractor had stated that the biggest issue was the detail of the transverse joint keyway between the panels (9). The bottom lip of the joint would hit the protruding rebar of the previous panel during placement and had suggested that no bottom lip be provided. In addition, the use of partial height full length channels in lieu of stud pockets caused additional conflicts during panel placement. The contractor had stated they would have preferred the shear pockets since the spacing and locations of the studs needed to be exact, and the girder top flange splice plates and bolts, as well as the panel vertical adjustment devices caused additional conflicts (9).

DEVELOPMENT OF IDOT'S ABC EVALUATION METHOD

Based on the success of the demonstration projects, the Department desired to continue the use of ABC on its projects and establish a standard method during planning and design to properly identify which structures were good fits for accelerating construction. IDOT was very interested in what other states were doing regarding ABC especially Wisconsin and Iowa and envisioned a similar flowchart and rating tool with general guidelines to help filter projects. IDOT envisioned a spreadsheet rating tool that was easy to use since consultants, in-house engineers, and District personnel without significant structural experience were all going to utilize the tool. The tool had to be easy to follow so that non-structural individuals could understand the information but robust enough to gather as much information about the project site as possible. The idea was to develop a tool that would allow Phase I planners to be able to communicate ABC decisions to Phase II designers at both the District and Bureau levels. The lessons learned from the demonstration projects would help lay the groundwork for the tool and guidelines. For example, based on the lessons learned from US40 over West Fork Shoal Creek project, contractor access became a critical factor to consider during plan development. Guidelines were included that suggested designers determine staging areas, delivery locations, crane placement, site access, and demolition locations when evaluating ABC. The Department has more flexibility to identify and acquire Right-of-Way and easements early in the plan development rather than during design plan preparation. As a result, constructability was an important consideration in developing the rating tool and several scoring constraints were included to cover the construction costs associated with these factors.

To successfully integrate the new ABC evaluation method, the tools were incorporated directly into IDOT's bridge planning process. The bridge planning process evaluates site information and possible bridge configurations to determine the most appropriate design and construction based on cost, safety and function (10). As part of the process, designers are required to identify and evaluate alternatives for effective methods to construct, repair, or replace a bridge with economics playing a vital role in all recommendations (10). It is known that bridges constructed using an ABC method could increase initial structure cost by more than 20%. Therefore, successful use of ABC requires a careful evaluation of the requirements for the bridge, site constraints and an unbiased review of the total costs and benefits. One of IDOT's early concerns was how to quantify societal costs such as business or environmental impacts and wanted to incorporate these indirect costs into the scoring of the tool. As a result, an entire category was established within the tool to cover the factors that impact the community at-large from a monetary

and non-monetary perspective. Scoring constraints for railroads, waterways, businesses, pedestrians, bicyclists, and the environment were established to evaluate the impacts to these entities based on construction. Scoring criteria was developed that allowed the user of the tool to make an educated decision about the impact.

In addition, IDOT was very interested in the existing condition of the bridge to help determine if ABC could benefit the project. The existing condition would help determine if staged construction could be utilized. In several cases, IDOT has experienced an increase of over 30% in construction cost due to staged construction and wanted to identify a way to compare the increase in initial structure cost utilizing ABC to staged construction. During the planning process, the cost of staged construction can get lost in the preferred option since closures and mobility impacts control the decision making. However, utilizing ABC with a closure could prove to be more economical and beneficial and IDOT desired a way to evaluate these options as simply and completely as possible. As a result, an entire category was established to cover the condition of the existing bridge and determine if the structure could be staged constructed. Since condition rating provides an accurate method for determining the condition of the bridge, the deck, superstructure and substructure ratings were included as scoring constraints.

Finally, IDOT was interested in scoring user costs in the rating tool since each District has a different method for calculating monetary impacts to the travelling public. Again, an entire category was established in the rating tool to standardize the user cost impacts across all Districts. Based on the FHWA definition for Road User Impacts, scoring constraints were established to cover travel delay, vehicle operating costs, crash costs, emission costs and impacts to nearby projects. Scoring criteria was modelled after the rating tools from the Wisconsin and Iowa DOTs.

BRIDGE CONDITION REPORT

IDOT's main goal was to identify which bridges should be investigated further for ABC as early as possible. The very first step in any IDOT project is to inspect the existing structure and develop a Bridge Condition Report (BCR). The BCR is intended to provide a format for Districts and local agencies to document a proposed scope-of-work for an existing structure to the Bureau of Bridges and Structures (BBS) (10). The BCR documents a bridge or structure's current physical condition and functionality (10). It also addresses structural and safety deficiencies and includes all pertinent information that is required to support the proposed scope-of-work (10). As a result, it was only logical that an ABC evaluation became part of the BCR process.

The overall BCR process did not change and a recommendation on the proposed scope of work for the bridge was still required prior to any ABC evaluation. Once the proposed scope of work was identified for the bridge, the project should then be evaluated for Accelerated Bridge Construction utilizing the new ABC Rating Scorecard spreadsheet as envisioned above. It was determined that the evaluation should only be included for scope of works identified as deck replacement, superstructure replacement, complete replacement or a new structure. Standardizing a rating tool to cover rehabilitation projects or retaining walls, culverts or three-sided structures was deemed too difficult; therefore, these types of structures were not included. If the project did not contain an existing bridge, IDOT still wanted an evaluation to determine if ABC would benefit the project. Since a BCR is not required for a new bridge, IDOT included requirements and formatting for a technical memorandum that incorporated the ABC Rating Scorecard evaluation.

ABC RATING SCORECARD

To help the Designer "think" through and gather enough information during the planning process of a bridge project, IDOT developed the ABC Rating Scorecard spreadsheet. The tool is a qualitative assessment of the impact ABC methods may have on a project when compared to conventional construction and acts as a filter to determine the suitability of bridge projects for ABC based on a set of variables and scoring criteria. The tool requires the user to assign a score for twenty-eight (28) input variables in four (4) major categories based on specific scoring criteria and constraint descriptions that have been established to compare ABC to conventional construction. The assigned weights for each

variable have been determined based on their importance in determining if ABC should be utilized on a project. The four (4) major categories are as follows:

Existing Structure Information – the variables in this category are intended to cover the urgency of the repair/replacement and to determine if staged construction is feasible based on the condition of the existing bridge.

Road User Impacts – the variables in this category are intended to cover the Road User Impacts associated with Travel Delay, Vehicle Operating Costs, Crash Costs, Emissions Costs, and Impacts to Nearby Projects. The variables are based on the definition of Road User Costs as outlined in the FHWA Manual "Work Zone Road User Costs".

Societal Impacts – the variables in this category are intended to cover impacts to users not covered by the Road User Impact category. These impacts include railroads, business, waterways, environmental and pedestrians.

Constructability – the variables in this category are intended to cover the construction costs, schedule and proposed structure geometry.

A description of each of the twenty-eight (28) input variables is included in the tool to provide specific scoring criteria to help guide the user. The input variables are scored assuming conventional construction. The scores were established assuming the higher the variable input score, the higher the likelihood that ABC would benefit the project. Once the user inputs scores for the twenty-eight (28) variables, the ABC Rating Scorecard automatically calculates a Total ABC Score based on the input. The Total ABC Score is based on the total weighted input score compared to the maximum weighted score of the spreadsheet. The Total ABC Score is then output as a percentage. In addition, the tool provides an individual Category Score for the four (4) categories as reference only. The Category Score is only used to gage which categories and variables provide the biggest impact to the Total ABC Score.

To help designers determine an ABC recommendation, a flowchart was developed based on the rating spreadsheet score. The flowchart was divided into three categories based on the scoring results and probability that ABC would provide a benefit to the project. If a Total ABC Score of 25 or less is recorded, Conventional Bridge Construction is the most logical choice to evaluate further. However, ABC can still be evaluated if the Department has identified the project as a program initiative. A program initiative can encompass a variety of initiatives, including (but not limited to) innovation, research needs, public input, local initiatives, pilot projects or stakeholder requests. These items should be considered on a project-specific basis. If a Total ABC Score of 60 or more is recorded, ABC is the most logical choice to evaluate further. The threshold of 60 is intended to capture any bridge receiving a score of 5 in all of the most heavily weighted variables. For ABC Rating scores between 25 and 60, the user should consider additional questions prior to making a final decision on ABC. These additional questions are intended to force the user to step back, think about the project as a whole, and decide if an ABC method really makes sense with all the project-specific information considered. These questions include:

Can the bridge construction be accelerated by ABC?

Do traffic volumes support the need for accelerated construction?

Do the site conditions support an ABC approach?

Do benefits of ABC outweigh additional costs?

If the answer to any of these questions is no, then Conventional Construction is the most logical choice to evaluate further unless the Department has identified the project as a program initiative. Once a recommendation is determined, the Designer should provide justification for the recommendation including the major factors, variables and scores affecting the Total ABC Score in the Bridge Condition Report. If there is general concurrence during the BCR process that ABC should be evaluated further, then IDOT desired minimal ABC information to be included in the Type Size and Location (TSL) plans. However, the submittal of the TSL can vary across projects. Not all Phase I projects include a TSL and

decision makers may be different between Phase I planning and Phase 2 design. As a result, it was decided that a coordination conference call or meeting be established with the Department to determine the goals of the project and the applicable ABC methods from a constructability, user impact, and project delivery perspective. The TSL development should then include the critical ABC factors that meet the goals of the project as determined during the coordination meeting. To aid designers, IDOT provided a plan development outline and considerations that were modelled after the IL-115 over Gar Creek bridge replacement since the contractor stated that the plans were developed to an acceptable level for ABC.

In addition to the ABC Rating Scorecard spreadsheet, IDOT wanted to define the different ABC technologies commonly used in the industry and discuss general guidance associated with each method to encourage the Designer to evaluate alternate bridge design and construction. Lessons learned on the use of UHPC with precast deck panels from the Campground Road over I-57 and Peoria Street over I-290 demonstration projects were included in the general guidance as well as the use of Prefabricated Bridge Elements and Systems (PBES), Bridge Movement and Installation Methods, Foundation and Wall Elements, Rapid Embankment Construction, and Fast Track Contracting. Some of these technologies have already been used on Illinois projects, but there are others that have not yet been tried that the Department believes may have potential application in Illinois and therefore were included.

LOOK AHEAD

The initial goal in developing the ABC tool and guidelines was to gather enough knowledge about the site and find the right ABC candidates for the job. However, the interview process is still on going and as the date of this paper, IDOT has yet to release the official policy requiring the use of the ABC Rating Scorecard during the Bridge Condition Report development. The Bureau of Bridges and Structures has been using the ABC Rating Scorecard internally as part of the BCR review process and has rated over 40 bridges using the tool. Based on these results and almost a full year of internal use, the Department is fine tuning the tool. In addition, BBS is vetting the ABC Rating process with the various Districts in the state. It should be noted that the Districts that were involved in the demonstration projects, especially D9 on the Campground Road project, have stated they would do an ABC project again (9). IDOT's vision is to release the ABC Rating Scorecard, flowchart and general guidance in the upcoming update to the Department's Bridge Condition Report Procedures and Practices Manual. As additional projects are identified and designed, the guidelines and tools could be refined with the ultimate hope of incorporating the most beneficial ABC technologies into the delivery of their projects. IDOT understands the interview process can consist of many steps and the search can take a while to find the most qualified candidate for the position. However, with the ABC Rating Scorecard, IDOT hopes to find the bridge site that perfectly matches the job requirements, ultimately nailing the interview.

REFERENCES

1 Illinois Department of Transportation. (2019*). Illinois Department of Transportation website*. Illinois Department of Transportation. Date viewed 9/12/2019. http://idot.illinois.gov

2 Illinois Department of Transportation. "Transportation Fast Facts." (2019). Retrieved from https://idot.illinois.gov/Assets/uploads/files/Transportation-System/Fact-Sheets/transportation-fast-facts.pdf

3 Illinois Department of Transportation. "Annual Report." (2018). Retrieved from http://idot.illinois.gov/about-idot/our-story/performance/reports/annual-report/index

4 Illinois Section of the American Society of Civil Engineers. "Report Card for Illinois Infrastructure." (2018). Retrieved from https://www.infrastructurereportcard.org/state-item/illinois/

5 FHWA. “Accelerated Bridge Construction Final Manual.” Publication No. FHWA-HIF-12-013.” 11/01/11

6 AASHTO and Tobey Construction Inc. (2018). “Contractor Perspective on ABC – SHRP2 R04 Spotlight on IL 115 Gar Creek Bridge Lateral Slide.” Webinar. Retrieved from https://abc-utc.fiu.edu/webinars/webinar-archives/

7 Mark Thompson IDOT Bureau of Bridge and Structures. (2018) “Accelerated Bridge Construction” Power Point Presentation. Print

8 David Liu, Transystems and Jayme Schiff, Illinois Department of Transportation. (2016). “Design and Construction of Illinois’s First Precast Deck Panel bridge with UHPC joints” Abstract. First International Interactive Symposium on UHPC

9 Illinois Department of Transportation. (2019). “ABC Project: Full Depth Precast Deck Panels and UHPC – Lessons Learned Meeting.” Meeting Minute Notes. Print.

10 Illinois Department of Transportation. “Bridge Manual.” Design Manual. IDOT. Springfield. 2012. Print.

FDOT Experience with PBES for Small-Medium Span Bridges

Steven Nolan, P.E, Florida Dept. of Transportation [1], (850) 414-4272, steven.nolan@dot.state.fl.us
Sam Fallaha, P.E, Florida Dept. of Transportation [1], (850) 414-4296, sam.fallaha@dot.state.fl.us
Vickie Young, P.E, Florida Dept. of Transportation [1], (850) 414-4301, vickie.young@dot.state.fl.us
[1] State Structures Design Office, 605 Suwannee St, Tallahassee FL. 32399

ABSTRACT

In the last quarter century, some elaborate methods of accelerated bridge construction (ABC) have been explored and executed in Florida, predominately though necessity in the segmental construction. ABC techniques have also been applied to more traditional flat-slab and slab-on-girder bridges including: Prefabricated Bridge Elements and Systems (PBES), full size bridge moves, top down construction, and other efforts to minimize road user delays and environmental impacts. This paper focuses on four modest structural systems which were successfully implemented on FDOT construction projects since the initiation of FHWA's Every Day Counts program. This discussion focuses on ABC structural systems for: Precast Intermediate Bent Caps, Precast Full-Depth Bridge Deck Panels, Prestressed Concrete Florida-Slab Beams, and Geosynthetic Reinforced Soil Integrated Bridge Systems.

INTRODUCTION

Florida has been heavily involved in accelerated bridge construction activities (ABC) since the middle of the last century, primarily driven for economic advantage, with efforts predominantly led by the precast concrete industry. In the last quarter century, some elaborate methods of accelerated bridge construction have been explored and executed in Florida, predominately though necessity in the post-tensioned (PT) segmental construction to provide economy through speed of fabrication and erection, to offset significant mobilization and setup cost, specialized PT subcontractors and equipment. ABC techniques have also been applied to more traditional flat-slab and slab-on-girder bridges including: Prefabricated Bridge Elements and Systems (PBES), full size bridge moves, top down construction, and other efforts to minimize road user delays and environmental impacts. There have been some lessons learned on the quest for more rapid and economical construction, however the predominance of successful projects should encourage further ABC innovation and application. This paper focuses on four practical structural systems which where demonstrated on several FDOT construction projects since the initiation of FHWA's Every Day Counts program. These ABC structural systems include:

1. Precast Pile Bent Caps;
2. Precast Full-Depth Bridge Deck Panels;
3. Prestressed Concrete Florida-Slab Beams;
4. Geosynthetic Reinforced Soil Integrated Bridge Systems.

These systems represent a narrow but potentially prolific scope of the ABC initiative and reflect some of the structural priorities of the FDOT, and lessons learned during the period of 2010 to 2018.

BEFORE "EDC"

Long before the FHWA's "Every Day Counts" programs formalized the term Prefabricated Bridge Elements and Systems (PBES) under the ABC initiative in 2011 & 2013, this concept had been used since the 1950's in Florida at various scales and complexity, especially with precast/prestressed components. One of the first and largest prestressed beam bridge project began in 1951, shortly after the successful Walnut Lane demonstration in Pennsylvania (1). The first Sunshine Skyway crossing involved production, delivery and erection of 2,178 prestressed beams of 48-feet for the 3 miles of the approach trestle spans (2) at the mouth of Tampa Bay. A similar parallel bridge was completed in 1971 to bring it to Interstate standards as a dual carriageway. This feat was later rapidly repeated with the upgraded replacement crossing in 1986 after the tragic MV Summit Venture bridge collision (3). 1,300 longer AASHTO Type IV prestressed beams were

used for the trestle approaches (and the longest segmental box cable-stay bridge in the US at the time (4). Prior to the new Skyway, replacement of the Seven Mile Bridge (35,867 ft. long) in the Florida Keys saw the construction of the longest precast concrete bridge in the world completed at the time (1982), with a maximum of five spans erected in one week (5). Sixteen years later the 18,425-ft. Garcon Point Bridge achieved a world record "seven [140 ft.] spans erected in seven consecutive days" (6) in May 1998, with the 19,265-ft. Mid-Bay Bridge completed five years earlier in just 25 months (7), all using span-by-span segmental construction as a proof points for ABC.

There were some connection integrity issues that arose from the early effort in the "need for speed" in construction. Match-cast dry-joint segmental box connections did not provide the desired water tightness needed for low-maintenance highly durable structures (Long Key Bridge, 1978) (8). Requirements for pre-package post-tensioning grout, to improve the flowability and subsequent quality of duct filling, did not provide the desired elimination of voids or complete protection of the steel-strands as hoped (Sunshine Skyway and Wonderwood Bridges) (9) (10). Accelerated schedules for design, review, and construction activities on design-build projects resulted in undesirable effects including: plunging of a complete pier foundation during segmental span erection (Selmon Expressway, 2004), warping of split-box segments (Ringling Causeway, 2002), segment box joint opening under traffic (Hathaway, 2012), and the collapse of a partially completed bridge over traffic discussed by Zhou et al. (2019) (11) and Cao et al. 2019 (12).

PRECAST PILE BENT CAPS

Precast pile bent caps were used on several Florida bridge projects since the 1990's (Edison Bridge 1993), sometimes at the initiative of the contractor (Buckman Bridge, 1997), inspiring initiatives for standardization in the late 1990's by LoBruono, et al. (1996) (13) that were never fully realized. Design-Build project such as St. George Island bridge replacement (2004); and I-10 over Escambia Bay (2007), both utilized precast bent caps but with different precast piling systems. After the rollout of the ***Every Day Counts*** initiative and completion of the NCHRP Report 681 (14), there was renewed interest in standardizing due to improved design provisions for the connections of PBES. The FDOT 2013-2014 demonstration project on US90 over Little River (15) provided positive performance of the grouted duct connection details on multi-column bents and further developments for standardization of these elements. Subsequent research project BDV30 977-16 investigated grouted pile pocket connections Kampmann et al. (2017) (16). The results provided recommendations and additional confidence in the constructability of this type of connection for typical driven-concrete pile construction tolerances and hot weather grouting. In 2015, FDOT developed a Mathcad worksheet design tool (17) for precast pile-bent cap analysis. In 2018 the program was updated to include a glass fiber-reinforced polymer (FRP) reinforcing option and published to the FDOT website. Efforts to integrate the output with a future FDOT Standard Plan parametric configuration as discussed in Nolan et al. (2015) (18) are still under consideration. Also, the discussed Standard Plan development in (18) has been delayed in favor of contractor initiated and design-build options, such as the recently completed 2.3-mile SR-90/Tamiami Trail bridge in the Everglades National Park shown in ***Figure 1***.

Figure 1*: SR-90/Tamiami Trail bridge with 90 precast intermediate pile-bent caps completed in May 2019.*

As the most recent example, the SR-90/Tamiami Trail bridge included more than 90 precast pile-bent caps to accelerate the construction schedule for critical path activities of two bridges. The first bridge (7675-ft.) with 56 spans and the second bridge (4650-ft.) with 34 spans. Discussions with the design-build team list several reasons for using precast bent caps including cost and compressing the time for critical path schedule items.

Ongoing FDOT sponsored research related to precast pile connections includes testing and further evaluation of socketed connections in bent caps and footings under research project BDV29 977-51 by Garber (2019) (19). Other FDOT sponsored research is improving the economy of corrosion-resistant precast/prestressed piles using GFRP spiral reinforcing under BDV30 977-27 by Sungmoon et al. (2017) (20), and GFRP pile splicing under BDV29 977-52 by Melarbi and Farhangdoust (2019) (21).

PRECAST FULL-DEPTH DECK PANELS

These elements typically are intended for slab-on-girder bridges with either: full-width transverse deck panels with transverse CIP joints; or between-girder spans with longitudinal joints and transverse joints. FDOT has used both systems in recent years, with another novel system implemented at the contractor's request using a full-length bridge span and longitudinal ultra-high performance concrete (UHPC) joint as shown in Figure 2 (US-441 over Taylor Creek) (22). The same principal has also been applied for two rapid replacements of deteriorated approach slabs on Interstate I-10:

Between-Girder Longitudinal Deck Panels

Typically, the between-girder span deck slabs have been proposed for rapid replacement of deteriorated decks supported on precast partial-depth stay-in-place forms from 1980-90's era bridge construction or widening projects, such as I-95 Northbound over CR 5A (Fast-Facts, 2018) (23). This typically allows overnight replacement of damaged deck sections to minimize commuter traffic impacts.

Full-Width Transverse Deck Panels

Typically, the full-width deck slabs have been used for accelerated construction on new bridges. The FDOT demonstrated this system on US-90 over Little River & Hurricane Creek, which is fully documented under the IBRD instrumentation and monitoring report for BDV30 307-01. Details from this project can be found in the 2014 ABC Conference Proceedings (15) and will not be repeated, how the results from the 4-year load testing and monitoring findings by Roddenberry et al., (2019) (24) confirm the integrity of composite action but also showed the progressive appearance of transverse cracking, which was attributed mostly to shrinkage restraint.

Full-length Bridge Slabs with Longitudinal UHPC Joints

A recent contractor initiated solution for accelerated bridge replacement utilized large precast slab units that were connected longitudinally with narrow UHPC joints along the crown line (US-441 over Taylor Creek, 2018) (22)

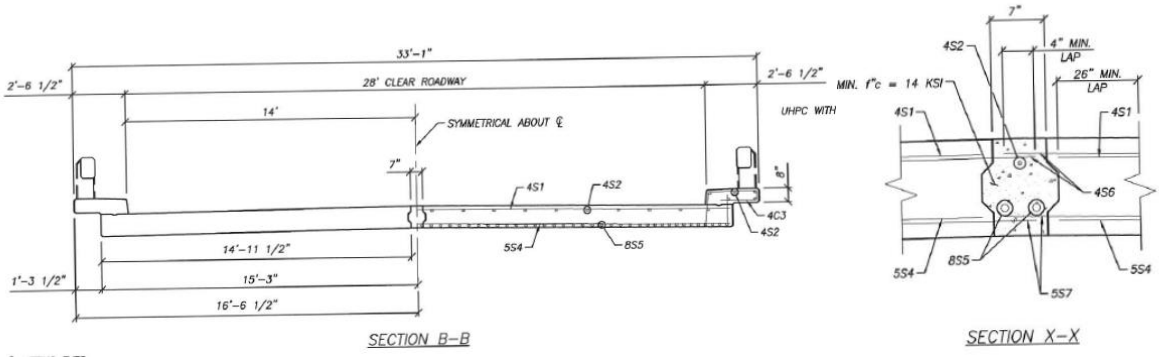

Figure 2: *Precast slab bridge with UHPC longitudinal joint for US-441 over Taylor Creek.*

Full-length Bridge Approach Slabs with Longitudinal UHPC Joints

A slight variation of the full-length bridge slabs is being used for approach slab replacement on two bridges along I-10 in North Florida (Flat Creek and SR-267B) (25) (26). Initially proposed as post-tension precast slabs based on a successful precast concrete pavement project on US92 near Deland, Florida (27). The details were revised mid-way through the design phase to utilize UHPC, simplifying the connection details and potentially accelerating construction.

PRESTRESSED-SLAB BEAMS

When devoid of complications from post-tensioning of special connection details, these PBES systems can be a rapidly constructible, cost effective, and offer a robust superstructure solution for modest spans. These beams couple nicely with GRS-IBS systems when geotechnical and hydraulic conditions allow for a complete bridge system, as demonstrated on the SR-373 Bridge over St Marks Trail (28). This project which involved the replacement of a structurally deficient bridge, was completed in six weeks during the summer of 2014. These prestressed-slab beams were the prototype for the standardized Florida-Slab Beams (FSB) (29) that have now been designed into at least 70 bridges with 36 completed as of November 2019. Typical cross-section details are shown in ***Figure 3***.

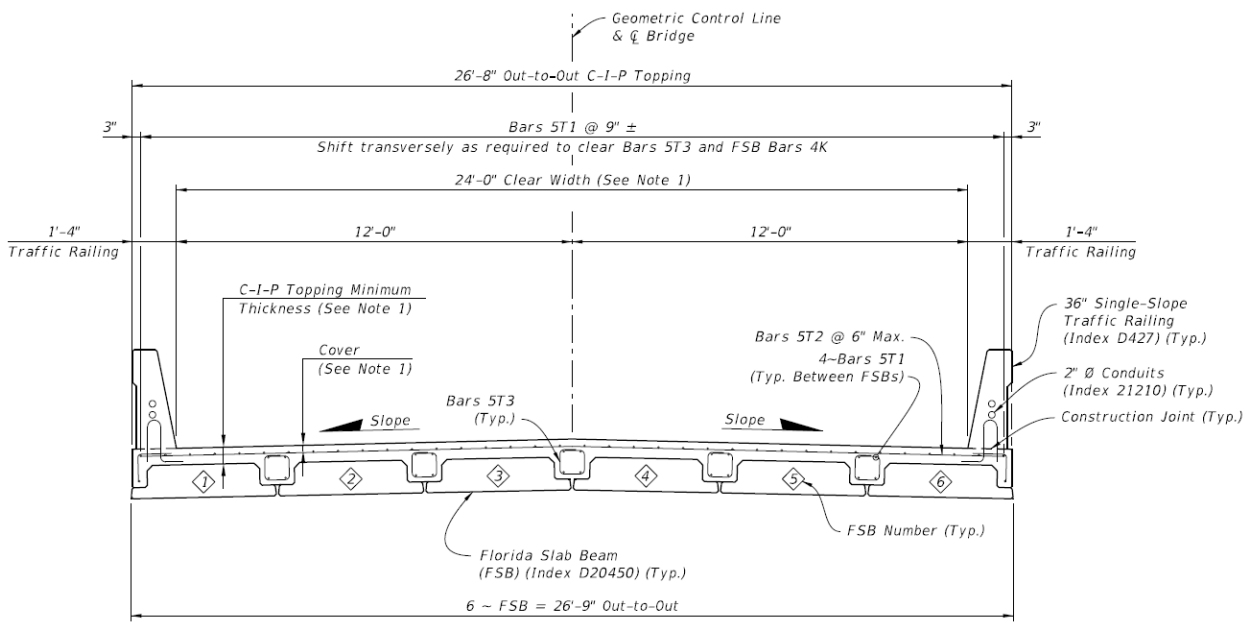

Figure 3*: Typical section for FSB standard bridge configuration available in 12, 15, & 18-inch precast thicknesses*

FDOT took this beam system one step further by developing the FSB Superstructure Packages in 2016 (30). These are Developmental Standard Plans that include the full design of a bridge superstructure utilizing the FSBs, to help minimize design time and design costs of a project. These packages (or Standard Plans) include five possible bridge widths that can span three different lengths (30 ft, 40 ft, and 50ft), for a total of fifteen different bridge geometry combinations. Currently there are three ongoing projects utilizing these Developmental Standards.

In addition to the development of the FSB Superstructure Packages, the following efforts to enhance the FDOT prestressed-slab beams include:

UHPC longitudinal connections

Development of a simplified narrow longitudinal joint utilizing UHPC has the goal of eliminating the 6-inch structural concrete overlay and speeding construction. Limited scale structural testing for optimal joint configuration and fatigue endurance has been completed. Full-scale fatigue and strength testing is expected to be completed in early 2020 under the final phase of this research project by Garber, 2016 (31). Challenges related to rideability due to beam camber, and differential cambers pose constructability issues that may initially limit this application to shorter single span applications.

Link-Slabs

Link-slabs details for improved longitudinal and lateral resistance from loads associated with truck breaking and storm waves, will allow optimizing foundation design thru load sharing and improved structural resilience from extreme events. Both fiber-reinforced concrete (FRC) and UHPC options are being investigated to minimize the transverse cracking that is often associated with deck continuity systems that are subject to significant rotational demand. Two demonstration bridges are under construction along US41 in Port Charlotte (32) (33).

FRP Prestressing and Reinforcing

Improved durability for low-level bridge span replacements over salt-water, is being utilized in the Florida Keys. Six spans of US1 over Cow Key Channel are being replaced due to accelerated corrosion degradation from recreational watercraft (34). Carbon FRP prestressing strands in combination with glass FRP shear and supplemental reinforcing, are replacing the traditional carbon-steel elements. A similar configuration for a complete bridge has been designed for the City of St. Petersburg, for the replacement bridge 40th Ave NE over Placido Bayou (35).

Stainless-Steel Shear and Supplemental Reinforcing

Another form of improved durability for low-level bridge replacements over salt-water, is the use of stainless steel reinforcing for the outer stirrups. Five bridge replacements near Jacksonville Beach are utilizing this strategy for improved durability of PBES components. High-Strength Stainless-Steel (HSSS) prestressing strands in prestressed concrete piles have already been implemented by FDOT under the Standard Plans Index 455-100 series, however HSSS prestressing strands in concrete girders are also under investigation by Roddenberry et al. (2018) (36). The goal is to increase durability performance similar to FRP-PC with the potential for reduced concrete covers and elimination of expensive corrosion inhibitors or highly-reactive pozzolans in the concrete mix.

GEOSYNTHETIC REINFORCED SOIL-INTEGRATE BRIDGE SYSTEM (GRS-IBS)

GRS-IBS was standardized by FDOT in 2014 through the Structures Design Guidelines (Section 3.12.7) (37) and Developmental Standard Index D6025 (38). Seven projects have utilized the system to-date with both prestressed slab beams and I-beam superstructure types. One of the more unique application was for the intermediate piers supporting a five-span precast-slab multi-use trail bridge crossing an intermittent floodway along US-301 near Dade City, FL. as shown in Figure 4. The design of a significantly more demanding application utilizing Florida-I beams on a GRS-IBS foundation with an integral diaphragm and bearing slab will be presented by Quan-Yang Yao et al. (2019) (39) at this conference.

***Figure 4**: GRS-IBS intermediate piers for multi-use trail along US301, under construction in 2016.*

CONCLUSION

Many ABC techniques related to PBES and GRS-IBS have been found to be advantageous for modest size bridge systems in Florida, and the number of applications and variations continuous to increase. Construction costs remain the predominant deterrent for broader ABC deployment on smaller projects, however the potential repetitive nature of longer bridges often offsets the higher mobilization, fabrication, erection and transportation costs, for improved project economy. Construction time savings are the predominant motivation for ABC PBES, with the potential for improved construction quality from precast components, reduced highway user delays, and reduced environmental disturbance. GRS-IBS advantages are attributed to the use of smaller construction equipment, foundation settlement tolerance, and the simplicity and speed of construction.

REFERENCES

1. Zollman, C. (1979), “Magnel’s Impact on the Advent of Prestressed Concrete, 25 Years of Reflections on the Beginnings of Prestressed Concrete in America”, Prestressed Concrete Institute, Chicago, IL, Part 1, pp.20-32, 1981 (reprint).
2. Fiore, M.E., and Hakman, P.A., (1955). “Sunshine Skyway Construction”, The Military Engineer Journal, No. 319, Sept-Oct 1955 pp 354-357.
3. Heller, J. (2000). “The Day the Skyway Fell, May 8, 1980”, St Petersburg Times Online, May 7. https://web.archive.org/web/20071017040518/http://www.sptimes.com/News/050700/TampaBay/Horrific_accident_cre.shtml
4. Chandra, V. and Szecsei, G. (1988), “Sunshine Skyway Bridge Ship Impact Design of Low Level Approaches”, PCI Journal, V. 33, No. 4, July-August 1988, pp.96-123.
5. Tassin, D.M. (2006), “Jean M. Muller: Bridge Engineer”, PCI Journal, V. 51, No. 2, March-April 2006, pp.88-101.
6. Figg. (1999), “Garcon Point Bridge”, Bridge Portfolio – Long Bridges Over Water, FIGG Bridge Group, Tallahassee, FL. http://www.figgbridge.com/garcon_point_bridge.html
7. Figg. (1993), “Mid-Bay Bridge”, Bridge Portfolio – Long Bridges Over Water, FIGG Bridge Group, Tallahassee, FL. http://www.figgbridge.com/mid_bay_bridge.html
8. Moreton, A. J. (1989), “Segmental Bridge Construction in Florida – A Review and Perspective”, PCI Journal, V. 34, No. 3, May-June 1989, pp. 36-77.
9. Corven, J. (2002), “New Directions for Florida Post-Tensioned Bridges – Volume 1 of 10”, Corven Engineering Inc., for Florida Department of Transportation, Tallahassee, FL. https://www.fdot.gov/structures/posttensioning.shtm

10. Fisk, P. S. (2013), “Sonic/Ultrasonic Testing of Post Tensioning Ducts”, Wonderwood Bridge, Jacksonville, Florida, SR 116 over the Intracoastal Waterway. Report prepared for Florida DOT. NDT Corporation, Sterling, Mass.
11. Zhou, X., Di, J., and Tu, X. (2019), “Investigation of collapse of Florida International University (FIU) pedestrian bridge”, Engineering Structures, V. 200, December 2019. https://doi.org/10.1016/j.engstruct.2019.109733
12. Cao, R., El-Tawil, S., Agrawal, A.K. (2019), “Miami Pedestrian Bridge Collapse: Computational Forensic Analysis”, ASCE Journal of Bridge Engineering, Vol. 25, Issue 1, January 2020.
13. LoBuono, Armstrong & Associates, HDR Engineering Inc., Morales and Shumer Engineers, Inc., “Development of Precast Bridge Substructures”, Project No. 510703, FDOT, Tallahassee, FL, May 1996.
14. NCHRP. (2010), “Development of Precast Bent Cap System for Seismic Regions”, NCHRP Report 681, Transportation Research Board, National Research Council.
15. Nolan, S. (2014), “Precast Bent Caps and Full-Depth Deck Panels for US 90 over Little River and Hurricane Creek”, Proceedings: 2014 National Accelerated Bridge Construction Conference, December 4-5, 2014, Miami FL, pp.897-907.
16. Kampmann, R. (2015), “Rheology Limits for Grout Materials used for Precast Bent Cap Pile Pockets in Hot Weather”, FAMU-FSU College of Engineering for FDOT Research Contract BDV30 977-16, Tallahassee, FL.
17. FDOT. (2018), “Bent Cap v1.0 (Release Date 11/07/2018)”, Structures Programs Library, Florida Department of Transportation, Tallahassee, FL. https://www.fdot.gov/structures/proglib.shtm
18. Nolan, S. (2015), “FDOT Precast Bent Cap Development and Implementation”, Collection of Papers and Extended Abstracts 2015 National Accelerated Bridge Construction Conference, December 7-8, 2015, Miami FL, pp.71-84.
19. Garber, D. (2019), “Evaluation of Concrete Pile to Footing or Cap Connections”, Florida International University, for FDOT Research Project BDV29 977-51.
20. Sungmoon, J. Kampmann, R. (2018), “Evaluation of Glass Fiber Reinforced Polymers (GFRP) Spirals in Corrosion Resistant Concrete Piles”, FAMU-FSU College of Engineering for FDOT Research Contract BDV30 977-27, Tallahassee, FL.
21. Melarbi, A. and Farhangdoust, S. (2019), “Epoxy Dowel Pile Splice Evaluation”, Florida International University, for FDOT Research Project BDV29 977-52.
22. FDOT. (2018), Fast-Facts: US-441 over Taylor Creek. https://fdotwww.blob.core.windows.net/sitefinity/docs/default-source/structures/innovation/fastfacts/fastfacts_437984-1.pdf
23. FDOT. (2018), Fast-Facts: I-95 NB over CR 5A, https://fdotwww.blob.core.windows.net/sitefinity/docs/default-source/structures/innovation/fastfacts/fastfacts_438321-1.pdf
24. Roddenberry, M., Kampmann, R., Sobanjo. (2019), “Precast Element Evaluation for the US 90 Bridges over Little River and Hurricane Creek”, FAMU-FSU College of Engineering, FDOT Research Project BDV30-307-01, Tallahassee, FL.
25. FDOT. (2019), Fast-Facts I-10 over Flat Creek https://www.fdot.gov/structures/innovation/uhpc.shtm#Projects
26. FDOT. (2019), Fast-Facts I-10 over SR-267B https://www.fdot.gov/structures/innovation/uhpc.shtm#Projects
27. Littleton, P. and Mallela, J. (2014), “Florida Demonstration Project: Precast Concrete Pavement System on US92”, Applied Research Associates, Inc. for FHWA Highways for Life, Washington DC. https://www.fhwa.dot.gov/hfl/projects/fl_pcps_us92.pdf
28. Nolan, S. (2017), “Prestressed/Precast Florida-Slab-Beams for Robust Local Bridges and Accelerated Construction”. ABC-UTC webinar presentation, November 16, 2017. https://abc-utc.fiu.edu/webinars/webinar-archives/

29. FDOT (2016), Florida Slab-Beams: Index D20450 series, Developmental Design Standards, Florida Department of Transportation, Tallahassee, FL. https://www.fdot.gov/roadway/DS/Dev.shtm#20450
30. FDOT (2016), FSB Superstructures Packages: Index D30000 series, Developmental Design Standards, Florida Department of Transportation, Tallahassee, FL. URL https://www.fdot.gov/roadway/DS/Dev.shtm#30000
31. Garber, D. (2016), "Florida Slab Beam Bridge with Ultra-High Performance Concrete Joint Connections", Florida International University, FDOT Research project BDV29 977-28, Tallahassee, FL.
32. FDOT (2019), Fast-Facts: US41 over Morning Star Waterway. https://fdotwww.blob.core.windows.net/sitefinity/docs/default-source/structures/innovation/fastfacts/fastfacts-435390-1.pdf
33. FDOT (2019), Fast Facts: US41 over Sunset Waterway. https://fdotwww.blob.core.windows.net/sitefinity/docs/default-source/structures/innovation/uhpc/fastfacts_435390-1.pdf
34. FDOT (2019), Fast Facts: US1 over Cow Key Channel. https://fdotwww.blob.core.windows.net/sitefinity/docs/default-source/structures/innovation/fastfacts/fastfacts-441740-1.pdf
35. Cardno, FDOT (2019), Fast Facts: 40th Ave NE over Placido Bayou. https://fdotwww.blob.core.windows.net/sitefinity/docs/default-source/structures/innovation/fastfacts/fastfacts-443600-1.pdf
36. Roddenberry et al. (2017), "Stainless Steel Strands and Lightweight Concrete for Pre-tensioned Concrete Girders", FAMU-FSU College of Engineering. FDOT Research Project BDV30 977-22, Florida Department of Transportation.
37. FDOT (2019), Structures Design Guidelines, Structures Manual – Volume 1, Florida Department of Transportation, Tallahassee FL. https://www.fdot.gov/structures/structuresmanual/currentrelease/structuresmanual.shtm
38. FDOT (2017), Florida Slab-Beams: Index D6025 series, Developmental Design Standards, Florida Department of Transportation, Tallahassee, FL. URL https://fdotwww.blob.core.windows.net/sitefinity/docs/default-source/roadway/ds/dev/d06025.pdf
39. Yoa, Q., Diggs, D., Jones, L., Patel, K. (2019), "Design of First Florida-I Beam Bridge with GRS Abutment", Proceedings of the 2019 International Accelerated Bridge Conference (pending), Miami, FL, December 2019.

Everyday ABC in Texas

Jamie F. Farris, P.E, Texas Dept. of Transportation, Jamie.farris@txdot.gov
Graham Bettis, P.E., Texas Dept. of Transportation, Graham.Bettis@txdot.gov

INTRODUCTION

Though not as flashy as highly publicized rapid bridge replacements, Texas has seen great success in utilizing prefabricated elements from the ground up to increase speed and quality in almost all aspects of bridge design and construction. With readily available materials that allow for production of high-performance concrete at low cost, the Texas Department of Transportation (TxDOT) is particularly reliant on precast concrete elements. There are a large number of precast concrete producers in Texas, and as an industry they have an excellent history of collectively pursuing and implementing innovative prefabricated technology. Similarly, TxDOT works with steel fabricators and manufacturers of many other bridge elements to implement new ideas and technology. As more and more emphasis is being placed on speedy construction, Prime Contractors around the state have increasingly embraced the concept of maximizing the use of prefabricated elements. In addition to drastically increasing construction production rates, utilizing prefabricated elements also ensures high quality since the products are fabricated in highly controlled plant environments. Finally, utilizing prefabricated elements drastically increases safety by reducing the amount of construction time and by eliminating much of the more dangerous work (e.g. forming and casting bridge caps in the air). For decades, Texas has relied on precast superstructure and deck elements. In recent years there have been great advances in the use of other bridge elements, including: caps, columns, railing, and unique elements (e.g. winged slab beams). The presentation will cover what Texas has done, is doing, and plans to do with prefabricated elements that allow us to design, build, and maintain high quality, economical bridges all over the state.

PREFABRICATED ELEMENTS

Due to speed of construction and increased quality and safety, the use of prefabricated elements is TxDOT's primary technique for accelerated bridge construction. In the past, TxDOT traditionally only used prestressed beams and panels, but now refabricated elements can encompass practically every element from the foundation up.

Prestressed Beams

TxDOT's first bridge using pretensioned and precast concrete beams started with the *Texas and New Orleans RR Overpass* in Kennedy, Texas, which was completed in 1957. The first significant use of the prestressed I-beam in Texas was over Corpus Christi Harbor in 1959. The bridge was made up of 2,000 ft. of 40 and 60 ft. prestressed concrete I-beams. This was also during the time that the Federal Aid Highway Act of 1956 signed by Eisenhower, provided over $25 Billion over a 12 year period for the development of the Interstate Highway System. As the Interstate Program gained momentum, Texas was able to report the lowest cost per square foot of bridge deck in the country (1). The use of precast elements was a major factor in this low cost. In addition to ensuring low cost and high quality, it also became apparent during these early stages that the use of prefabricated bridge elements also significantly sped up construction. Extensive communication between TxDOT Bridge Division engineers and Texas contractors, along with the development of standard shapes contributed to the rapid development of precast beams in Texas. For several years, the standard details were fine-tuned to fit fabrication capabilities and a variety of geometric configurations. Currently, TxDOT bridge standards support the use of 6 different prestressed beam types: slab beam, box beam, X-beam (spread box beam), TxGirder (I shape), U beam, and decked slab beam. In 2018, roughly 96% of Texas span bridges were built using precast prestressed concrete beams (2).

Prestressed Precast Deck Panels

Prestressed concrete partial depth deck panels (PCP) span between beams and replace the bottom half of the cast-in-place bridge deck. Once in place, the panels form a safe and convenient work platform, enhancing safety, economy and speed of construction. They were first used in Texas in 1963 as an experiment on three bridges for US 75 Expressway in Grayson County. PCP's did not gain popularity until the bid item for reinforced concrete slab began to be measured by the square foot with the specification allowing the contractor to use removable forms, stay-in-place metal deck forms, or PCP's (3). To ensure consistent design, detailing, and construction practices, TxDOT issued the PCP bridge standard in 1978 and continues to maintain and update the standard as research and construction and fabrication practices have progressed. TxDOT has been using precast concrete panels on a large scale since the early 1980's. Today, approximately 97% of prestressed beam bridges use prestressed concrete panels. Not only do the PCP's allow the contractors to quickly construct bridge decks, but it provides for a far safer work environment by eliminating all or most of traditional deck forming.

TxDOT has also used full depth, full transverse width precast panels on different bridges to accelerate bridge construction. The details were developed based on research done under NCHRP 12-65, which developed a system without longitudinal post tensioning. Three bridges in Texas were built with full depth, full transverse width precast panels in the late 1980's (Lubbock Spur 327), 1990's (Georgetown Precast Pavements), and more recently in 2008 (Ozona Live Oak Creek Bridge). Live Oak Creek Bridge consisted of 88 full depth deck panels that were transversely prestressed and passively reinforced longitudinally. TxDOT is currently looking for additional opportunities to expand the use of these panels.

Precast Bent and Abutment Caps

Conventionally reinforced precast bent caps were introduced in the 1990's and used to address issues with conventional cast-in-place caps. TxDOT found that the use of precast bents, compared to cast-in-place bents, improved concrete quality, increased worker safety, and decreased road closure times due to construction. For example, in 1994, TxDOT decided to precast inverted tee straddle bents for a ramp on US 290. Conventional caps would have led to the closure of the lower roadway for 41 days, but by using precast caps, the lower roadway was only closed for 6 hours (4). The use of precast bent caps also offers speed of construction through repeatability. An example of this is Redfish Bay Bridge which is a 0.5 mile structure that was built in 1994. The use of precast bent caps, allowed the contractor to place 44 identical bent caps over the Gulf Coast much faster and safer than if cast-in-place caps were used (4). In January 2012, TxDOT created precast reinforced concrete bent cap standards suitable for multi-column and trestle pile bents in Texas. These standards work with other bridge standards to effectively give contractors the option of precast bent caps on standard bridge projects. They build upon a two-decade history of custom precast bent cap designs using passive mild reinforcing steel at TxDOT. In recent years, TxDOT has developed precast prestressed bent cap designs which capitalize on the capabilities of Texas prestressing plants to generate a durable and accelerated construction product. Prestressed caps offer the same advantages as conventionally reinforced precast caps, but prestressing provides enhanced crack control. TxDOT released precast pretensioned bent cap standards in April 2017 and they are intended to be used as an alternate for bridges using standard drawings.

TxDOT has been precasting abutment caps since the early 2000's. This allows a bridge to be built completely out of precast elements. Bridges have been built with the backwall attached to the cap, as well as with the backwall cast in place after the cap was set. Conventional reinforcing can be used or pretension strands can be used like in precast bent caps. Wingwalls are either precast or the cap is tapered, depending on the surrounding environment. For a precast wingwall option, TxDOT attached the wingwall by bolting it to the abutment cap. The bolts were screwed into coil bolts that were casted with the abutment and then the wingwall was slid on through existing holes.

Foundations and Precast Columns

For foundations, TxDOT has employed the use of steel and precast prestressed piling to save construction time on projects. Steel piling is often coated in an anti-corrosion material to protect the steel and increase durability.

In the mid 2000's, TxDOT constructed a bridge with precast columns to cut down on interstate road closures. The columns consisted of a precast concrete hollow shell that was set on the column reinforcing cage. The steel from the drilled shafts were extended to tie the column steel to the foundation steel. After the hollow column shells were set, concrete was placed in the cavity. The design and details removed the need for the contractor to form up the columns, which would have taken several days to install. TxDOT has also constructed bridges with segmental precast columns to preclude the need for forming and pouring concrete. The joints for this type of column need to be grouted and were found to be a complicated process. TxDOT has not used this type of column on a lot of projects because the outcome did not present a large advantage.

COMPLETE PBES AND MODULAR BRIDGE REPLACEMENTS

For bridges that were in need of an accelerated construction schedule, TxDOT has built bridges where every element was prefabricated including the foundation, substructure, approach slab, superstructure and railing. These bridges have typically been smaller bridges where a road closure would mean an extensive detour for surrounding communities. Oftentimes, rapid construction also minimizes interruption to emergency services for nearby residents.

Bridges have also been rapidly constructed by employing modular systems. In 2016, due to an oversize load impact, TxDOT needed to quickly replace steel beams and a concrete deck with minimal road closures in Houston, TX. Thinking outside of the box, TxDOT designers worked with contractors and fabricators to develop a plan to lift the new steel beams with the preformed metal deck attached to most of the beams. This provided an immediate working surface and allowed the contractor to quickly lay rebar and pour the concrete bridge deck in phases. Another project in Dallas, TX, which is currently under construction, also employs the use of modular components which will be constructed off site, lifted into place, and joined with closure pours between units. The work will be done in two weekend closures that reroutes mainlanes to frontage roads. The plans provide options for the contractor and also include weight and width comparisons.

THE FUTURE

Moving forward, TxDOT will continue to research new technology and innovations. Throughout the years, research has played a huge role in TxDOT's ability to advance prefabricated systems for use on bridges around the state. TxDOT plans to keep moving forward and is currently researching the following ABC type projects: precast columns, modular bridge components, utilization of UHPC bridge superstructures in Texas, and closure joint materials for side-by-side ABC among others.

SUMMARY

Precast prefabricated elements have served the state of Texas well. TxDOT has developed a multitude of standards and design policies to make each component that is fabricated repeatable and consistent. TxDOT's ability to partner with contractors to evaluate schedules and explore alternative contracting strategies also ensure the success of constructing bridges faster, safer, and that are more durable.

REFERENCES

1. Walker, C., "Origins of Prestressed Concrete," Texas Department of Transportation, presentation at University of Texas at Austin, 2011
2. *2018 Average Unit Cost Breakdown*, Texas Department of Transportation, www.txdot.gov, Austin, TX
3. *Bridge Design Manual*, Texas Department of Transportation, Austin, TX, December 2001.
4. Freeby, G., Miller, C., "Use of Pretensioned Bent Caps in Texas," ABC UTC Webinar, October 2017

ACCELERATED CONSTRUCTION OF THE I-40 METEOR CITY TI OP

Brent Conner, P.E., Arizona Department of Transportation, (602)712-8085, bconner@azdot.gov
William Downes, P.E., Arizona Department of Transportation, 602-712-7115, wdownes@azdot.gov

DEFINITIONS

ADOT	Arizona Department of Transportation
AADT	Average Annual Daily Traffic
FHWA	Federal Highway Administration
GRS	Geosynthetic Reinforced Soil
IBS	Integrated Bridge System
NHS	National Highway System
NTPEP	National Transportation Product Evaluation Program
PPC	Polyester Polymer Concrete
SRW	Segmental Retaining Wall
VPD	Vehicles Per Day

INTRODUCTION

Interstate 40 is a vital component of the NHS facilitating transportation of products and services through the State of Arizona. Average AADT at the Meteor City Overpasses is reported by ADOT (1) as 19,058 VPD with 4,481 Trucks. Interruption in mobility on Interstate 40 creates significant economic losses and traffic safety risks. ADOT utilized GRS-IBS to reduce construction phase durations and minimize mobility disruptions on this vital commerce corridor.

PROJECT DESIGN

FHWA (2) "The GRS-IBS is a fast, cost-effective method of bridge support that blends the roadway into the superstructure to create a jointless interface between the bridge and the approach." The Meteor City Overpass GRS-IBS was designed to minimize construction duration and included pre-cast box beams, pre-cast traffic barriers, SRW block, open-graded reinforced backfill, and PPC deck.

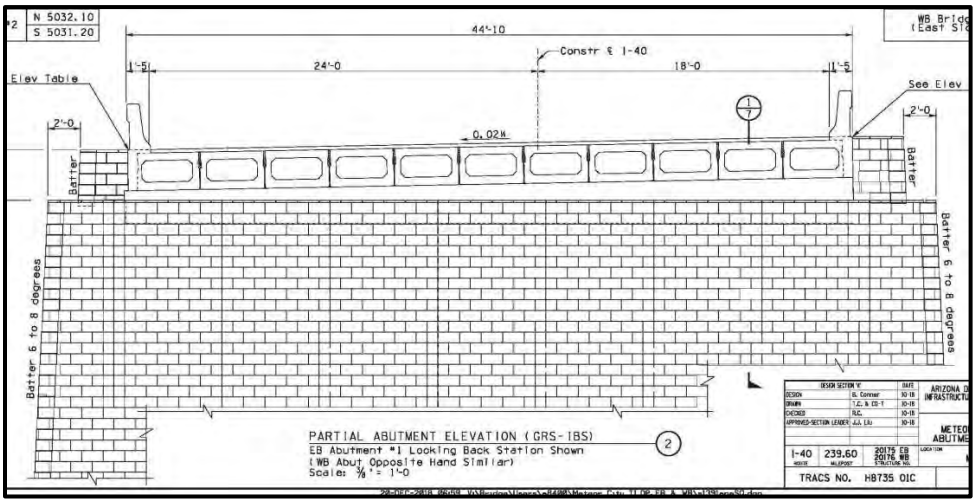

Figure 1

GRS Design

The GRS abutments were designed to utilize existing SRW block products that are commercially available in the state. Design was based on a vertical block height of 8 inches with reinforcements placed at each course of blocks. The block units were dry cast with a minimum compressive strength of 4,000 psi and freeze thaw resistance, FHWA (4). Vertical batter was specified between 6 to 8 degrees to reduce lateral stresses and deformation. Positive connection between blocks and geogrid was achieved with fiberglass pins. The positive connection between blocks produced uniformity in block setback and provides security against vandalism.

Reinforced backfill was designed as an open graded crushed rock, similar to AASHTO #57, to facilitate rapid compaction and acceptance. A method specification was developed to assure uniformity of compaction and limit damage to the geogrid during compaction. Design friction angle of the backfill was selected at 40 degrees based on aggregate property studies performed by FHWA (5). Reinforced backfill physical property specifications included a requirement for a minimum of 60% of the plus #4 rock particles to have a minimum of two fractured faces. Analysis of the design friction angle of the reinforced backfill demonstrates the importance of this property. A design friction angle of 34 degrees requires a 37% strength increase in reinforcement when compared to a design friction angle of 44 degrees. Design selection and construction evaluation of reinforced backfill friction angle is an essential component in efficiency and performance of the GRS system.

Biaxial geogrid with a 1.0 inch aperture was selected as the reinforcement to produce composite behavior of the GRS due to interlocking of the open graded backfill and geogrid reinforcement. The use of biaxial geogrid with open graded crushed rock produces a coherent mass. Vertical spacing of 8 inches between reinforcement layers with a 1 inch nominal rock product maintains an effective zone of reinforcement influence, NCHRP (3). Biaxial geogrid was a polyester product with PVC coating. Use of NTPEP evaluated geogrid products accelerated product acceptance during construction and reliability of selected design parameters. The method specification for compaction of the 8 inch lift of open graded reinforced backfill limited the size of the vibratory compactor to no more than 7,000 pounds to minimize installation damage to the geogrid during compaction.

IBS Design

Pre-cast bridge components including box beams, traffic barriers, and beam seat were utilized to accelerate construction. A total of 11 box beams were cast for each bridge at a facility in Phoenix, AZ and transported to the project site. Traffic barriers and beam seat were cast on-site by the general contractor. Box beams on the exterior of the bridge were cast monolithically with the barrier.

Integration between the roadway and bridge was achieved by extending biaxial geogrid and aggregate base across the roadway as support for the roadway asphaltic concrete paving. Lift thickness of the reinforced aggregate base was 8 inches.

Deck surface drainage requires a 2% cross slope. The beam seat thickness was tapered from 1 ft to 1 ft 11 inches to accomplish cross slope surface drainage. The bridge deck surface is composed of PPC.

Superstructure Design

The two structures were given unreinforced 2 ½" PPC deck as opposed to ADOTs normal practice of using a 5" reinforced deck. The PPC deck is expected to prevent longitudinal cracking between the box beams and prevent water infiltration. The PPC deck also has a greatly reduced construction time verses a reinforced concrete deck. As the first GRS-IBS bridge by the State of Arizona and the first to use PPC rather than Portland Cement Concrete as a deck it was decided to not include an asphalt overlay. The bridge does have steel angle iron installed at bridge ends to protect the PPC deck from snowplow damage.

LESSONS LEARNED

Although the project is a success there are several items that ADOT can improve on future projects. The first and most significant is when placed in thicker sections, several inches thick, PPC cannot be placed in the same manner as a PPC overlay. Different methods and even different screed machines need to be utilized.

Build-up is also a significant issue. Generally build-up is defined after girders are placed and actual top of girders are measured in the field. Because the PPC deck is nonstructural the camber of the girders was higher than in box beams of similar bridges. This meant that the buildup at the ends of the bridges was 3 inches, more than doubling the thickness of the PPC deck. Given the high cost of PPC buildup this project change order was not an incidental item and needs to be considered early and specifically called out in the plans.

PPC is considered an overlay. Special effort must be made to make clear that PPC is not used as an overlay in this situation and that does make a difference in the PPC placement.

REFERENCES

1. Arizona Department of Transportation, 2018, *HPMS Location Report for Year 2018-2023-2040*
2. Adams, Michael and Nicks, Jennifer, Ph.D., P.E., *Design and Construction Guidelines for Geosynthetic Reinforced Soil Abutments and Integrated Bridge Systems, June 2018,* FHWA-HRT-17-080, Office of Infrastruction Research and Development
3. National Academies of Sciences, Engineering, and Medicine, 2019, *Proposed Refinements to Design Procedures for Geosynthetic Reinforced Soil (GRS) Structures in AASHTO LRFD Bridge Design Specifications*
4. Chan, Cesar, Hover, K. et al, *Durability of Segmental Retaining Wall Blocks*: Final report, FHWA HRT-07- 021, 2007.
5. Nicks, J.E., Gebrenegus, T., Adams, M.T., *Strength Characterization of Open-Graded Aggregates for Structural Backfills*: Final report, FHWA HRT-15-034, 2015

PENNSYLVANIA TURNPIKE COMMISSION - EB117 ABC BRIDGE REPLACEMENT

Edward Bosack, PE, Alfred Benesch & Co, (570) 624-4294, ebosack@benesch.com
John Boyer, Pennsylvania Turnpike Commission, (717) 831-7279, jboyer@paturnpike.com

The Pennsylvania Turnpike Commission employed accelerated bridge construction (ABC) techniques to replace a deteriorated 3 span non-composite steel girder bridge over the Norfolk Southern Railroad. The replacement structure is a single span composite steel girder supported by full height concrete abutments on a micropile foundation. The project was awarded to the contractor on August 30, 2018 with a final completion date of November 1, 2019.

The bridge is located along a busy corridor of the Pennsylvania Turnpike in the Harrisburg, PA area with daily traffic volumes exceeding 30,000 vehicles per day. As a toll roadway, it is important to the PA Turnpike to limit delays and inconvenience to their customers through a prolonged single lane condition which will result in travel delays and inconvenience to motorists. Since traffic volumes are slightly less on the weekends, the Turnpike Commission proceeded with implementing two weekend closures of the Turnpike to permit the ABC replacement of the eastbound and westbound Turnpike bridges. The closure period of the Turnpike was heavily influenced by the presence of an active Norfolk Southern Railway which does not have the option of fully ceasing or detouring train traffic for the weekend closures. Significant coordination during design and construction was required to insure a successful outcome.

DESIGN AND RAILROAD / CONSTRUCTABILITY CONSIDERATIONS

The Turnpike identified this project as an ABC project during the early design phases to limit impacts to travelers. Early studies settled on a single span structure to minimize the size of the bridge that would be constructed using ABC techniques. The single span bridge also eliminated deck joints and minimized the deck area for future maintenance.

The substructure alternatives investigated centered around the ability to build it under existing spans 1 and 3 while maintaining normal Turnpike traffic. In addition to new substructure units, the conversion of the existing piers into abutments via the use of geofoam/lightweight backfill and lateral tiebacks was also considered. The reuse of the existing piers was ultimately dismissed due to several factors including the need to widen the existing structure and concerns by the railroad of not improving the horizontal clearance. The railroad desired to have the substructure units outside of their right of way which required the removal of the existing piers. Ultimately, the design team chose full height reinforced concrete abutments constructed between spans 1 and 3 supported on micropile foundations. Micropiles were used to construct the new abutments while keeping the existing superstructure in service given the limited vertical clearance. Due to the presence of stub abutments and sloping backfill from the bottom of the pier to top of the stub abutment, the use of soil nailing for excavation support was proposed to create adequate space to install the micropiles and ultimately construct the abutments.

The railroad requirements included minimum vertical and horizontal clearances which were easily addressed. In addition, work within the railroad right of way has more stringent requirements for crane use which includes the need for a 1.5 safety factor on all crane capacity charts. As part of the TS&L preparation, the design team thoroughly investigated crane placement, size and availability when finalizing the superstructure type. The site constraints (utilities, steep slopes, railroad and a limited access) combined with the 1.5 crane safety factor, resulted in relatively large cranes that required careful consideration with respect to site access and the ability to locate them favorably so as not to interfere with the numerous work crews/equipment that would be onsite throughout the weekend closure. An evaluation

of available cranes throughout PA and nearby states resulted in a limited number of large capacity cranes (i.e. 500 ton) that were adequate to meet the required factor of safety. The weight restriction resulted in a change during design to lightweight concrete in the deck and barriers. It also required adjustment to the two beam module sizes to balance the crane loads and allow the same size crane for several lifting locations.

The more intrusive requirement that had a larger impact on the design was the 24 daily trains and limited ability by the railroad to reduce or completely stop train movements. During the early stages of design, several coordination meetings were held with the Railroad to determine potential time periods during the weekend in which the railroad could cease or limit rail operations. Ultimately the railroad indicated that a single 5-hour rail traffic stoppage on a Sunday along with the normal maintenance outages (2-hours for every 8-hour period) for the weekend could be utilized for construction. Using this information, a construction schedule was developed which resulted in the need for a 59-hour detour of the Turnpike to complete the construction of one bridge (i.e., east bound or westbound). This schedule was scrutinized by the designer, Turnpike Construction personnel and the Railroad to come to a consensus that each bridge (i.e., eastbound and westbound) could be built over two separate weekends. Normally this type of bridge is built over a single weekend for both the eastbound and westbound structures, however the limited outage windows available created a prolonged schedule between train movements.

The PennDOT and PA Turnpike standard for approach slabs utilizes a sleeper slab, and a beam notch at the superstructure to reduce the chance of approach slab settlement. In evaluating the construction schedule, one of the elements the design team and PTC decided to eliminate was the use of a sleeper slab under the approach slab. Other state DOT standards were evaluated and several were found that do not use the sleeper slab and place it on compacted fill. Flowable fill was specified as the backfill behind the abutments since the placement and adequate compaction of stone behind the abutments was difficult with the presence of the existing superstructure. The use of flowable fill eliminated concerns of settlement and insured an expedited backfilling operation. In addition, it allowed the backfill to be placed very close to the abutment seat prior to the existing bridge demolition. After demolition, the contractor was required to place approximately 2 feet of compacted fill to the required subgrade. The approach slabs were placed directly on the compacted subbase and still supported by the beam notch at the superstructure.

BIDDING, CONSTRUCTION AND LESSON'S LEARNED

The construction cost estimate for the project was $11,732,451. The three bids received were $12,276,634.35, $12,284,768.73 and $15,333,000.00. The project was awarded to the low bidder and the Notice to Proceed was issued on August 30, 2018.

Construction commenced in Mid-October 2018 with clearing and grubbing. The contractor installed the soil nailing under the existing spans 1 and 3 by February 2019. Micropile installation started immediately after the soil nailing with all micropiles installed by mid-March 2019.

The contractor opted to construct the superstructure deck modules adjacent to the construction site in a nearby pasture. The temporary abutments were constructed using wood cribbing, steel I-beams and a level gravel base. The temporary support mimicked the final condition and permitted the contractor to construct the deck modules in their final condition and eliminate potential reinforcement bar conflicts in the UHPC joints. This method of construction worked well and there were no fit-up issues during the actual construction on the ABC weekends.

The contractor constructed the approach slabs on temporary concrete slabs that were constructed to create a smooth level surface for the approach slab base. The approach slabs were formed longitudinally in two rows for each bridge (EB & WB). This method worked fairly well, but it was discovered during the ABC weekend that the skew of one of the approach slab modules was slightly off which created an issue when aligning it properly in the paving notch. The mismatch in the approach slab skew was filled with UHPC. In addition, it was found that the construction tolerances resulted in up to a half inch elevation difference in the final condition between the top of approach slab and bridge deck elevation that required

adjustments during the first ABC weekend. This issue was addressed during the first weekend through a combination of concrete grinding and making up the elevation difference with the PPC overlay. Since this was anticipated for the second weekend, the contractor ground the approach slab notch to obtain the required fit.

The closure of the Turnpike was scheduled for the weekends of September 20th and 27th 2019 from 7PM Friday until 6AM Monday. The first weekend replaced the eastbound bridge with the westbound being completed on the second weekend. A go-no/go decision was made at noon on the Thursday prior to the scheduled closure and took into consideration weather, traffic, railroad or other potential issues that may impact the weekend closure. Fortunately, the weather and most other concerns were not an issue and the planned closures commenced as planned.

Throughout design, the team spent a significant amount of time reviewing the construction schedule for the weekend closures. Under normal circumstances (i.e., bridge crossing and roadway or stream), we have the option of detouring the roadway/stream users. In the case of the railroad, this was over a major north/south line that could not be detoured or cease operations over the weekend. The schedule was highly dependent on the railroad traffic which limited work over the tracks when there was an active train movement. During the weekend construction periods, there was about one train an hour from 7PM Friday through Saturday afternoon. This coincided with both the demolition and deck module placement during which there is the need to foul the track frequently. At the completion of construction, a comparison of the expected schedule during design and actual construction schedule was developed. While the overall weekend duration was consistent, the amount of time required for demolition and deck module placement went quicker than expected. The time required for the approach slab placement exceeded the expected timeframe from the design schedule and construction schedule. The differences can be attributed to crane placement proposed by the contractor which put them near the railroad track whereas during design it was assumed the railroad would not permit cranes parallel to the track.

At the completion of the project, a review of the project through construction revealed the following lessons learned:

- Extensive constructability reviews are essential during design to ensure the project can be constructed and limit potential claims during construction.
- The contractor needs adequate manpower, equipment and ability to improvise in the event of an issue during the ABC shutdown. Prequalified contractors are a necessity to ensure success.
- UHPC was effective for the closure pours and gained the required strength (12,000 psi) in about a 9-10-hour time frame, which was less than the expected 12 hours. The contractor suggested allowing alternative materials including PPC and high early strength concrete. Future projects should consider alternative methods if they have a proven serviceability, reduced cost and performance record.
- The setting of the approach slabs proved challenging for the contractor due to minor construction tolerance issues (precast to precast fit up) and the precise subbase preparation required. In the case of projects which utilize flowable fill, the potential for settlement at the begin/end of structure is minimized. The use of a non-standard approach slab (i.e., less than 25 feet, say 10 feet) would reduce the required subbase preparation and still provide a transition onto the structure to reduce the potential bump at the bridge. Alternate considerations can also include a recessed approach slab with a thicker overlay (bituminous, PPC or other) and the use of sleeper slabs.
- When constructing the new substructure under the existing superstructure, providing an optional construction joint near the top of the abutment proved useful for the contractor to provide workspace.
- The use of flowable backfill expedites backfilling operations and eliminated compaction concerns given the limited workspace under the existing bridge.

Overall, the project was a success with no major issues. The success can be attributed to several items including: concise and fully developed design plans that considered constructability; a facility owner willingness to consider alternate construction means and methods which permit expedited construction; and a competent contractor with the expertise, manpower and equipment to complete an ABC project.

ROUTE 46 OVER PIAGET AVENUE (CR 628) BRIDGE SUPERSTRUCTURE REPLACEMENT IN TWO WEEKENDS

John Hanke, P.E., MP Engineers, (646) 205-9272, jhanke@mpengs.com
Mahendra Patel, P.E., MP Engineers, (732) 857-5501, mpatel@mpengs.com
Nirav Shah, P.E., MP Engineers, (904) 315-7676, nshah@mpengs.com

ABSTRACT

The bridge superstructure carrying Route 46 over Piaget Avenue had exceeded its useful service life. Its concrete was crumbling and had to be replaced. The high traffic volume did not allow closure of any lanes during peak hours. Widening the bridge, even temporarily, was cost prohibitive. Piaget Avenue was also the sole access to a nearby school and thus had to remain open during the school year. Accelerated Bridge Construction (ABC) kept all lanes open during peak hours and did not hinder school access when needed.

BACKGROUND

The original bridge carrying Route 46 over Piaget Avenue in Clifton, New Jersey, was constructed in 1940 as a single span structure comprised of concrete encased rolled steel stringers and was skewed at approximately 45 degrees. The span length of the bridge was about 60 feet, and the out to out width of the bridge was about 69 feet. The existing bridge had two travel lanes in each direction. As the Prime consultant, MP Engineers provided the design and construction support services for the replacement of the entire superstructure, including the girders, bearings, parapets, sidewalks, curbs, and bridge deck.

The bridge deck was in poor condition due to underdeck spalls with exposed reinforcing, underdeck cracking and efflorescence with water staining. The superstructure was in fair condition due to areas of spalled and hollow sounding concrete encasement with locations of rust on the exposed steel. The substructure was in satisfactory condition with several fine vertical cracks in the breast wall and backwall of each abutment and wide cracks in three of the wingwalls. Two areas of scaling in wingwall coping were also noted. Since the previous inspection, the condition of the approach slab/pavement was downgraded from very good to good due to minor wheel rutting at the east approach roadway and several fine longitudinal cracks at both approach roadways. There were no other major changes to the overall condition of the structure. The structure was classified as structurally deficient due to the condition of the deck and functionally obsolete due to the inadequate lateral underclearance.

THE CHALLENGE

The Route 46 Bridge is located in a congested, urban environment, with Average Daily Traffic of 39,000 vehicles. It was also adjacent to a middle school that has access only from Piaget Avenue. Any deck or superstructure replacement project would impact vehicular/pedestrian access to the school including the drop-off and pick-up of school children. Because of this, the staging of any work on the bridge during the school year would require that Piaget Avenue remain open. In addition, the existing vertical clearance under the bridge was already substandard, so the design and erection of underdeck shielding that would not further reduce the clearance would be a significant challenge. On Route 46, the traffic volume is so heavy that the existing two lanes of traffic in each direction would not be able to be detoured off-site and would have to be maintained during peak hours. If conventional staged construction was used, the bridge would have to be temporarily widened to maintain those two lanes of traffic during construction. Widening the bridge, even temporarily, would be cost prohibitive. This widening was made even more complex because of an existing on-ramp to the Route 46 eastbound lanes just before the bridge.

THE SOLUTION

Keeping all of these critical items in mind, MP Engineers developed an Accelerated Bridge Construction (ABC) method using Prefabricated Superstructure Units (PSU). PSU's with precast concrete decks substantially reduced the construction time by eliminating long concrete curing periods for each construction stage. The joints in between the PSU's were to be filled with rapid curing Polyester Polymer Concrete (PPC), a procedure which had been used successfully in earlier New Jersey bridge projects. Polyester Polymer Concrete achieved a strength of 5,000 psi in 4 hours. A thin, one inch, PPC overlay was also to be placed during the ABC weekend, creating a durable superstructure system. By using this ABC method, the eastbound half of the bridge was constructed in one single weekend closure and the westbound half of the bridge was built in a second weekend closure. All construction was done during the summer months when the school and Piaget Avenue could be closed. By restricting critical work to weekends, peak hour traffic disruptions were eliminated. Also, because Piaget Avenue could be shut down during the summer weekends, this method greatly reduced the need for temporary shielding. See proposed superstructure below.

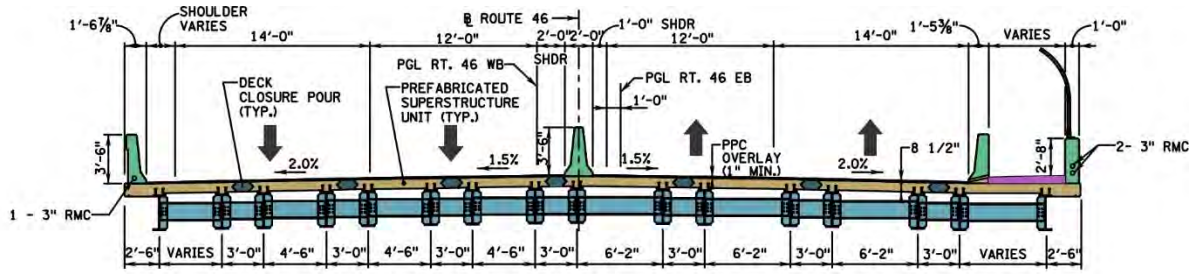

PROPOSED SECTION

- Prefabricated Superstructure Units (PSU's)
- 8 ½" Thick Precast Concrete Deck
- Two W30x99 Rolled Steel Beams - Grade 50W
- Closure Pours were Polyester Polymer Concrete (PPC)
- Roadway Covered with a 1" Thick PPC Overlay

THE VALUE ENGINEERING PROPOSAL

During construction, a Value Engineering (VE) proposal, which was accepted, changed the superstructure to precast concrete box beams with an HES concrete deck. However, the girder/backwall combination and the ABC construction scheme, schedule and traffic control plan, were kept the same.

The reasons for the change were as follows: The Prefabricated Superstructure Units (PSUs) would have required very large cranes, and the picks were made more complex by the large skew of bridge. Also, PPC requires substantial time and labor to mix and install. Though the Contractor had successfully installed PPC in another NJDOT project, this contract called for larger quantities which increased the schedule risk.

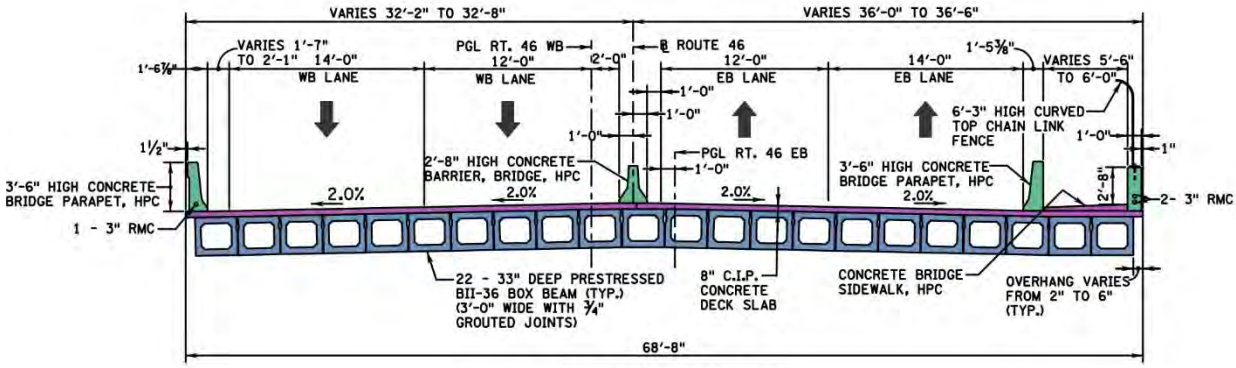

PROPOSED SECTION

Value Engineering Proposal

- 22 - 33" Deep x 36" Wide Prestressed, Precast Concrete Box Beams
- 8" C.I.P. High Early Strength (HES) Concrete; 4,000 psi after 24 hours
- Approach slabs are also C.I.P. HES Concrete
- Instead of transverse prestressing, C.I.P. deck was increased to 8 in deep (from 5 in) to stiffen the superstructure and disperse the loads.

DETOURS

In order to carry out the two ABC weekends, both lanes of traffic being carried by the half of the bridge to be replaced, had to be completely detoured off-site and away from the project. This was accomplished with a local detour around the project; and also a regional detour to keep traffic far away from the site and its local road network.

MP Engineers worked closely with NJDOT Departments of Traffic Engineering and Construction to create the best and least impactful detour routes possible. See the detour schemes used below.

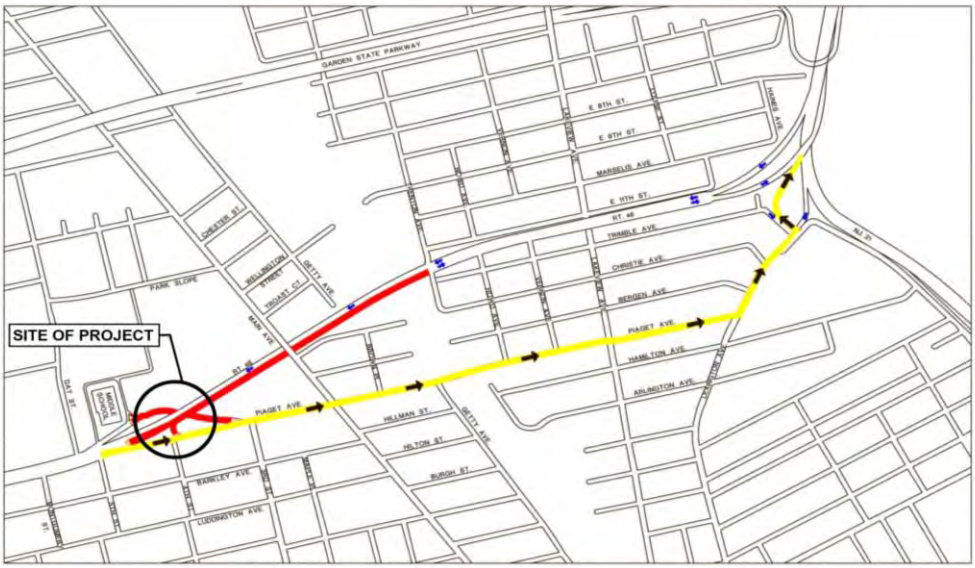

LOCAL DETOUR PLAN FOR CLOSURE OF RT. 46 EASTBOUND LANES STAGE 2

LEGEND: CLOSED ROADS DETOUR ROUTE

The local detour plan for the Route 46 westbound lanes in stage 3 was similar.

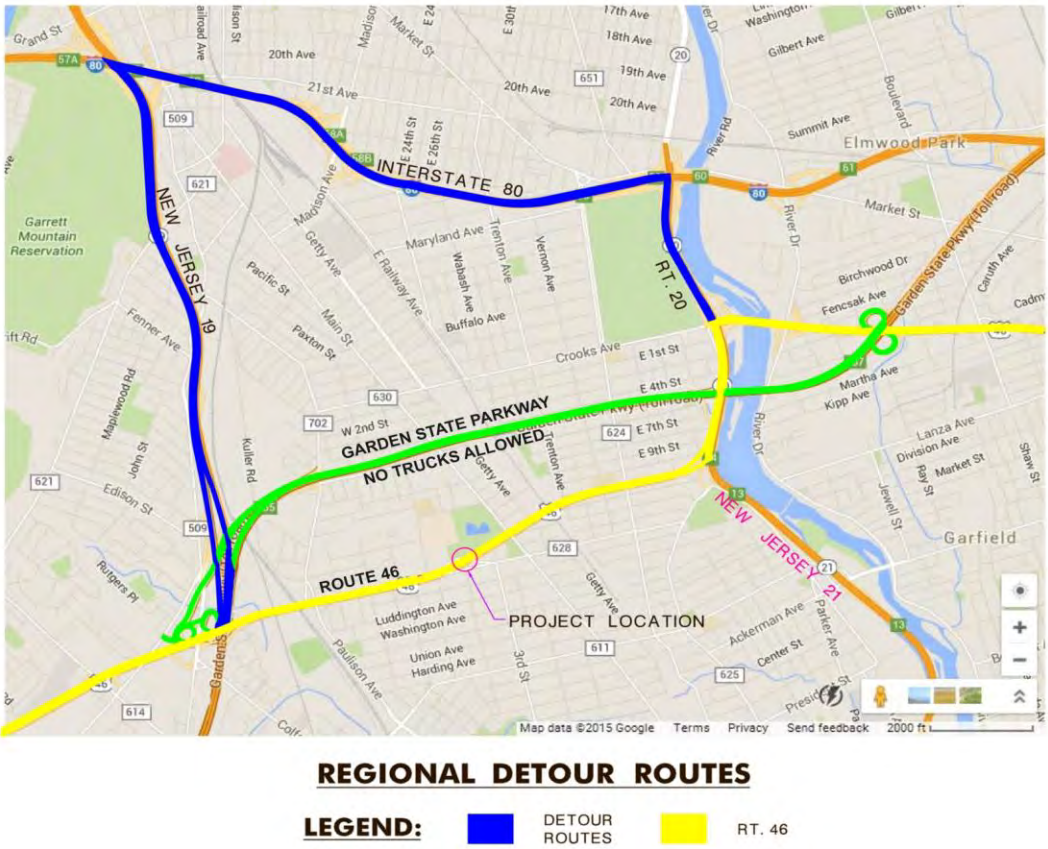

REGIONAL DETOUR ROUTES

LEGEND: DETOUR ROUTES RT. 46

Traffic was given the option to use the blue route above to avoid the local detour around the work site work during both ABC weekends.

STAKE OWNER INVOLVEMENT

Communication and coordination with all project stakeholders was started early in the design's final phase. Meetings were held with representatives of the adjacent school, the township of Clifton and first responders. Later in the design phase a Public Information Meeting was held wherein MP Engineers explained the issues that conventional construction would cause and how the ABC construction method would solve those problems. Handouts were made available and poster boards where displayed with photos and relevant plan views and maintenance of traffic schemes for the public to review before and after the presentation. Very few objections were raised during the course of the meeting and those that were, were satisfactorily addressed. One of the most important results of these public outreach efforts was the disclosure that in the middle of the summer, the township holds a Peruvian Day Parade on the last Saturday in July. It was therefore, clearly spelled out in the special provisions of this project that the ABC weekend could not take place on this weekend. It would have been potentially disastrous if one of the ABC weekends had been scheduled at the same time as this event.

COMBINED BEAM/BEARING/BOLSTER TRANSPORT

To expedite construction, the Contractor shipped the box beams with the bearings and bolsters attached. This assembly would rest on steel shim plates leveled to the correct height so that the top of the beams would be at their correct height after their installation. After this, the bearing area under the beams and around the steel shims are filled with grout. The assembly is held together with temporary threaded rods that were removed after installation. See sketches below.

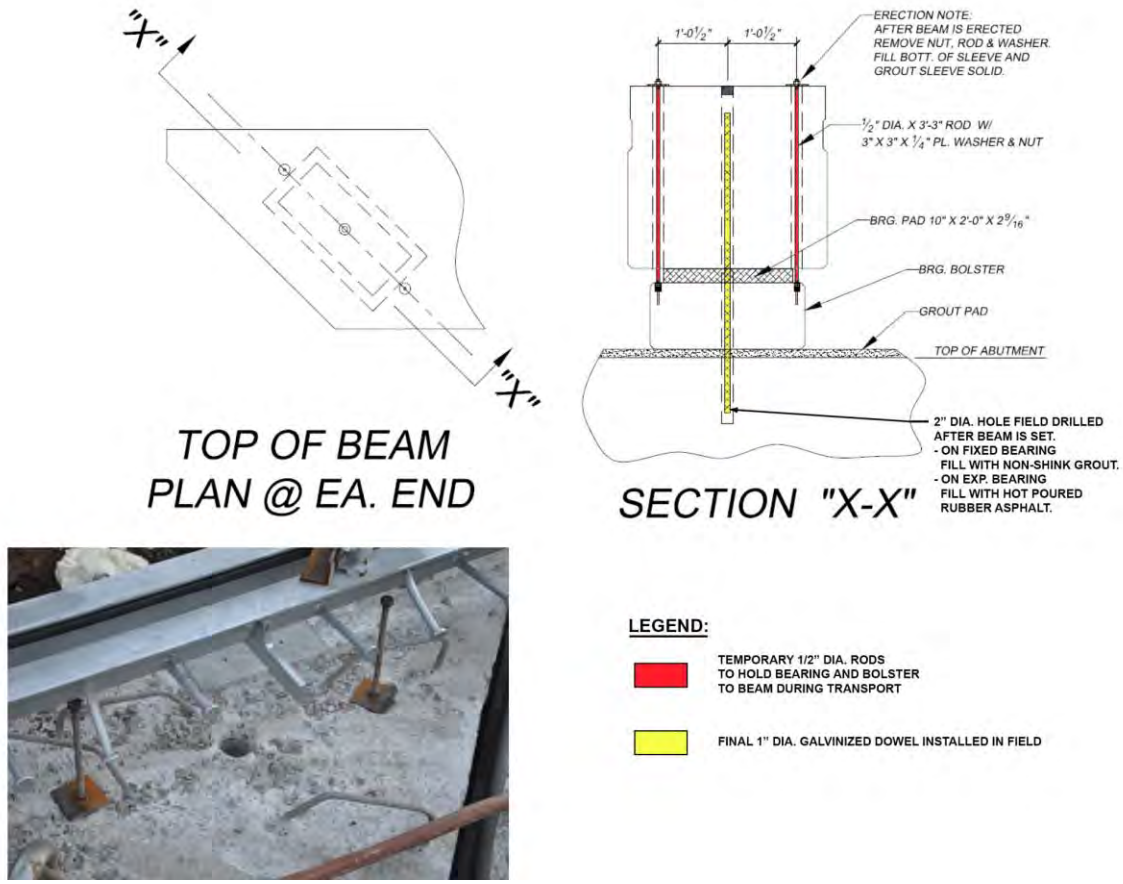

Beam/Bearing/Bolster Assembly

Another View of Beam/Bearing/Bolster Assembly During Installation

JOINT DETAILS MINIMIZING POSSIBLE FUTURE LEAKS

In conjunction with NJDOT, a joint detail was developed that minimized any possible joint leakage in the future. A standard strip seal was installed, but it was located over a concrete corbel extending from the superstructure beams. These corbels had PVC drains so that any water from possible future holes in the strip seal membranes, took place away from the bearings and bearing seat, and was directed to a perforated PVC underdrain that was behind the backwall. See detail below.

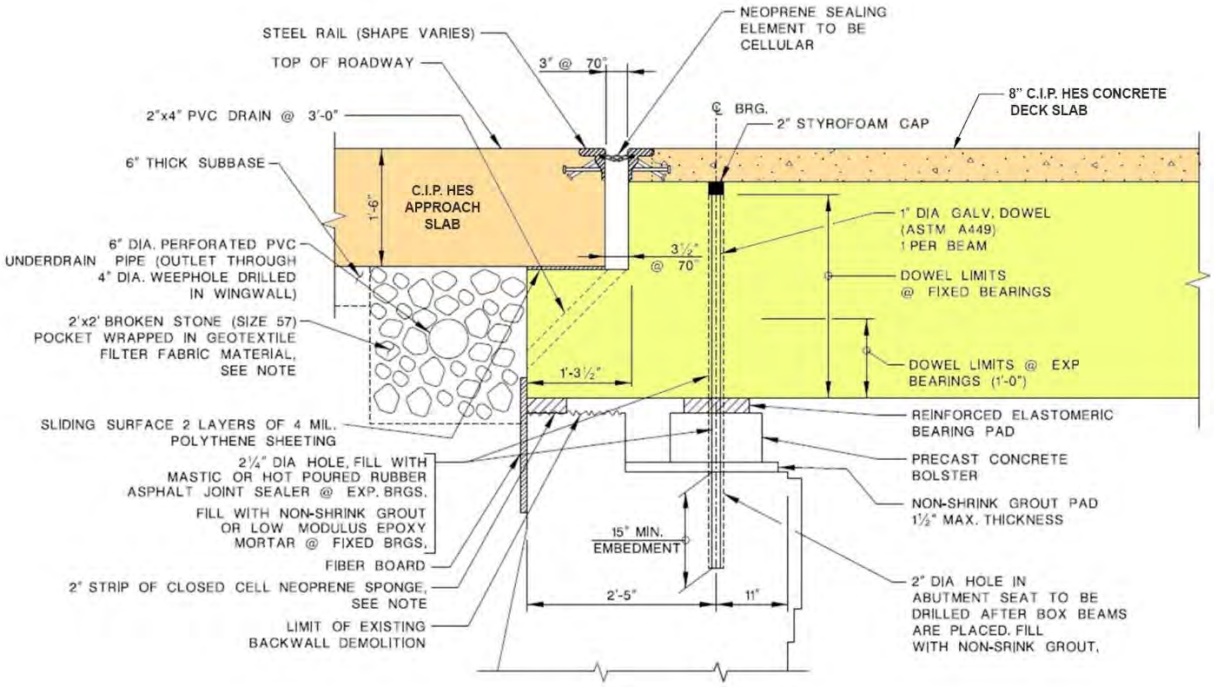

Joint Detail

UTILITY ISSUES

Communication/coordination with utilities was started early in the design phase. While no utilities were located on the bridge, there were three in close proximity. They were from PSE&G, Verizon, and Cross River Fiber. All three had overhead lines adjacent to the structure. Both Verizon and Cross River had lines carried by nearby PSE&G poles. PSE&G lines, running along the westbound lanes only a few feet from the structure, were carrying high voltage lines and had to be moved away from the structure before any construction was done. This required installing four new sixty-five-foot poles. Holes had to be dug, Sonotubes had to be installed, and many existing trees had to be cut down or trimmed in advance of the pole installation.

Though discussions with the utilities were started over two years before the first ABC weekend, and fifteen months before this, a final plan had been approved by the state; the required new poles were not installed until four weeks before the first of the ABC weekends.

Installation of New Poles for High Voltage Electrical Line Relocations

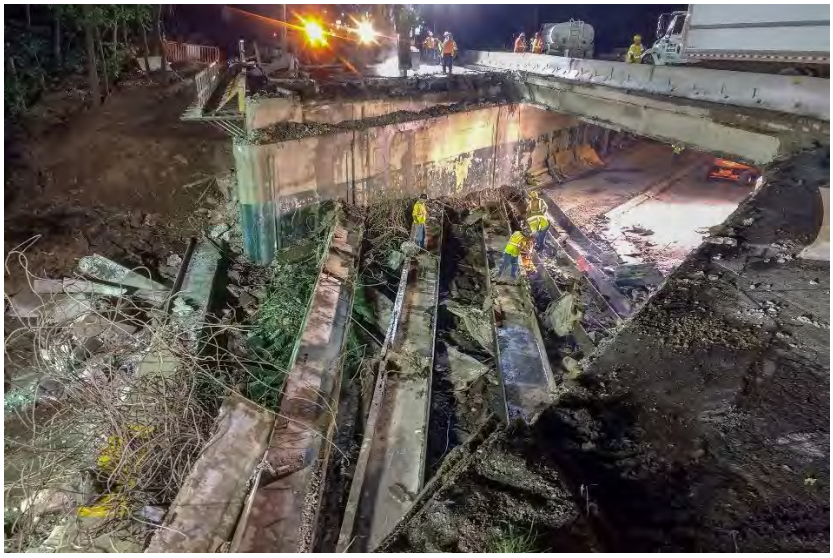

Construction Activities

The above photo highlights one of the advantages of ABC. By doing the construction in the summer, Piaget Avenue, under the bridge does not have to remain open. Therefore, the old beams can be dropped onto the roadway and no expensive shielding or staged construction is required to demolish the superstructure.

Installation of Concrete Box Beams

The photos above show the two 265-ton cranes working together to install the concrete box beams.

CONCLUSION

The main lesson learned is that ABC construction works, and it is a viable and cost-effective option when minimizing construction duration and potential construction related impacts are critical factors to be considered. Conventional construction methods would have resulted in many months of staged construction, complicating rush hour traffic. Keeping two lanes of traffic open during rush hours would have required at least a temporary widening of the structure, with complicated roadway geometry. Keeping Piaget Avenue open to school traffic would have resulted in the need for expensive shielding. Instead, the Contractor was able to construct the new superstructure in just two weekends, eliminating these scenarios.

Other lessons learned also include the need for early and continuous coordination with all project stakeholders. The feedback that was received prevented a potential angry township confrontation, had one of the ABC weekends been scheduled on the same weekend as the Peru Day Parade.

Also, the importance of starting work on identified utility conflicts as soon as possible cannot be emphasized enough. The shift of the overhead high voltage electrical lines was not done until four weeks before the ABC weekends. Not much of a margin of safety for the time critical weekend construction.

It has to be emphasized that the one essential element that allowed this ABC project to come together so successfully was the true partnership forged between the designer, NJDOT and the Contractor.

Completed Project

Completed Project

ACKNOWLEDGEMENTS

The authors would like to extend their gratitude and appreciation to Kamlesh Shah (Project Manager) and Pravin Dholaria (Resident Engineer) of NJDOT, Jeff Meyers (Superintendent) and Henry Meyers (President) of Anselmi & DeCicco – Contractor Team for their cooperation, support and advice.

JOINT DETAILS MINIMIZING POSSIBLE FUTURE LEAKS

In conjunction with NJDOT, a joint detail was developed that minimized any possible joint leakage in the future. A standard strip seal was installed, but it was located over a concrete corbel extending from the superstructure beams. These corbels had PVC drains so that any water from possible future holes in the strip seal membranes, took place away from the bearings and bearing seat, and was directed to a perforated PVC underdrain that was behind the backwall. See detail below.

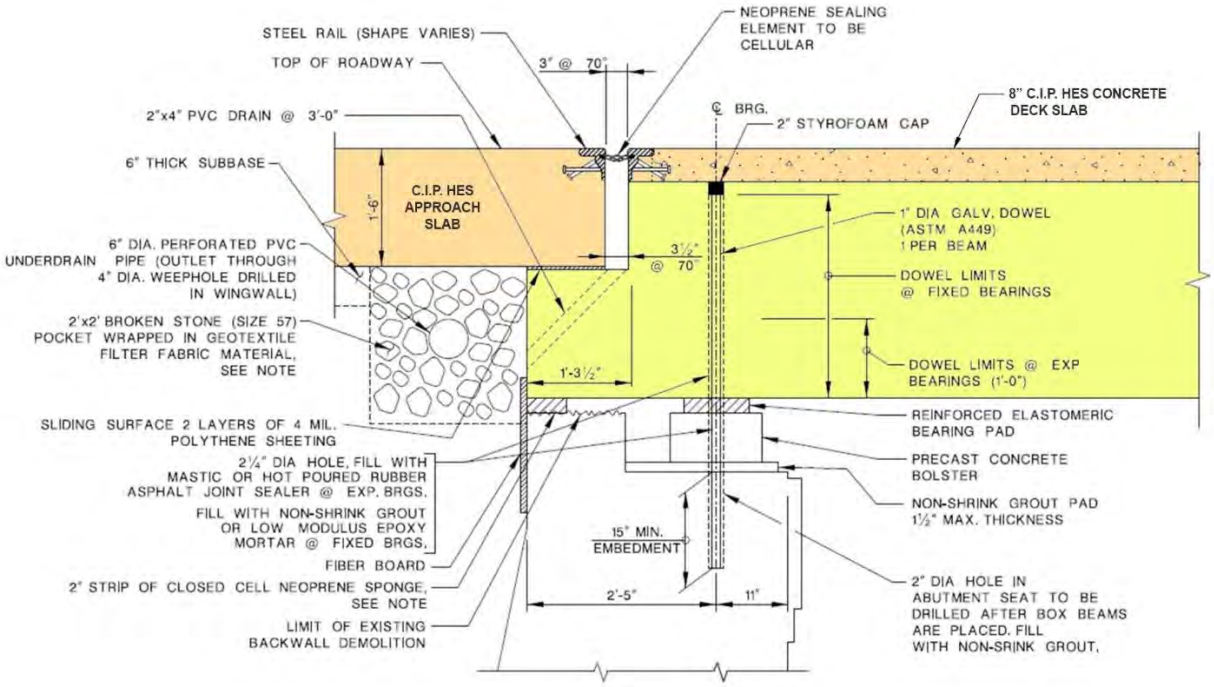

Joint Detail

UTILITY ISSUES

Communication/coordination with utilities was started early in the design phase. While no utilities were located on the bridge, there were three in close proximity. They were from PSE&G, Verizon, and Cross River Fiber. All three had overhead lines adjacent to the structure. Both Verizon and Cross River had lines carried by nearby PSE&G poles. PSE&G lines, running along the westbound lanes only a few feet from the structure, were carrying high voltage lines and had to be moved away from the structure before any construction was done. This required installing four new sixty-five-foot poles. Holes had to be dug, Sonotubes had to be installed, and many existing trees had to be cut down or trimmed in advance of the pole installation.

Though discussions with the utilities were started over two years before the first ABC weekend, and fifteen months before this, a final plan had been approved by the state; the required new poles were not installed until four weeks before the first of the ABC weekends.

Installation of New Poles for High Voltage Electrical Line Relocations

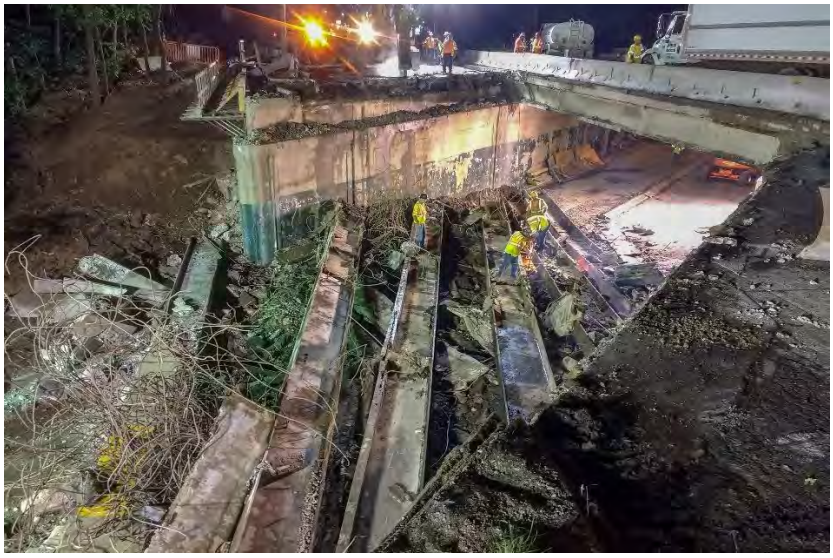

Construction Activities

The above photo highlights one of the advantages of ABC. By doing the construction in the summer, Piaget Avenue, under the bridge does not have to remain open. Therefore, the old beams can be dropped onto the roadway and no expensive shielding or staged construction is required to demolish the superstructure.

Installation of Concrete Box Beams

The photos above show the two 265-ton cranes working together to install the concrete box beams.

CONCLUSION

The main lesson learned is that ABC construction works, and it is a viable and cost-effective option when minimizing construction duration and potential construction related impacts are critical factors to be considered. Conventional construction methods would have resulted in many months of staged construction, complicating rush hour traffic. Keeping two lanes of traffic open during rush hours would have required at least a temporary widening of the structure, with complicated roadway geometry. Keeping Piaget Avenue open to school traffic would have resulted in the need for expensive shielding. Instead, the Contractor was able to construct the new superstructure in just two weekends, eliminating these scenarios.

Other lessons learned also include the need for early and continuous coordination with all project stakeholders. The feedback that was received prevented a potential angry township confrontation, had one of the ABC weekends been scheduled on the same weekend as the Peru Day Parade.

Also, the importance of starting work on identified utility conflicts as soon as possible cannot be emphasized enough. The shift of the overhead high voltage electrical lines was not done until four weeks before the ABC weekends. Not much of a margin of safety for the time critical weekend construction.

It has to be emphasized that the one essential element that allowed this ABC project to come together so successfully was the true partnership forged between the designer, NJDOT and the Contractor.

Completed Project

Completed Project

ACKNOWLEDGEMENTS

The authors would like to extend their gratitude and appreciation to Kamlesh Shah (Project Manager) and Pravin Dholaria (Resident Engineer) of NJDOT, Jeff Meyers (Superintendent) and Henry Meyers (President) of Anselmi & DeCicco – Contractor Team for their cooperation, support and advice.

ADVANCING ULTRA-HIGH PERFORMANCE CONCRETE IN THE BRIDGE SECTOR

Benjamin A. Graybeal, Ph.D., P.E., Federal Highway Administration, 202–493–3122, benjamin.graybeal@dot.gov

INTRODUCTION

Ultra-high performance concrete (UHPC) has gained a foothold in the U.S. bridge sector through more than 200 deployments across 27 states. Most of these deployments have engaged UHPC as a field-cast grout that offers simplified connection detailing and enhanced performance in projects using prefabricated bridge elements. Interest is growing in broader uses of UHPC to address other challenges in bridge design, construction, maintenance, and rehabilitation. The structural concrete research group at the FHWA Turner-Fairbank Highway Research Center is developing innovative solutions [El Helou and Graybeal 2019] and widely applicable guidance [Graybeal and El Helou 2019]. One current study focuses on key structural performance metrics relevant to the use of UHPC in primary structural elements, including flexure, beam shear, interface shear, and prestressing strand bond. Full-scale pretensioned girder testing is underway. Of interest to the design community, structural design guidance for UHPC is under development. Working with the American Association of State Highway and Transportation Officials' (AASHTO) structural concrete design committee, FHWA researchers are drafting a guide specification that may be adopted by AASHTO upon completion. Additionally, UHPC-based rehabilitation innovations are being developed and refined so that long-term challenges facing the bridge maintenance community have new, compelling solutions.

UHPC-BASED BRIDGE REHABILITATION SOLUTIONS

The inventory of over 600,000 bridges in the United States is aging, and many of these bridges require intrusive maintenance to retain their level of service. Nearly every bridge has a reinforced concrete bridge deck, and these decks are inherently susceptible to degradation associated with structural and environmental stressors. Many bridges also have expansions joints whose resiliency is suspect, thus allowing environmental contaminants to pass through the joint and begin attacking the underlying structure. UHPC offers novel solutions to both issues.

UHPC overlays are a compelling solution because they allow the exceptional durability properties to be engaged in the replacement of the cover concrete on deteriorated bridge decks. UHPC provides an armoring layer that both spans over underlying defects and is resilient against future degradation. Given that UHPC is concrete, this solution can be implemented within the framework of existing construction techniques. The Swiss have been leaders in developing this bridge rehabilitation solution [Brühwiler and Denarié 2013], while in the United States, there have been a handful of deployments, including the one shown in Figure 1. Researchers at FHWA are investigating optimal mix designs and surface preparations for UHPC overlays subjected to high-cycle fatigue loading after being installed on a deteriorated bridge deck [Graybeal and Haber 2017].

Source: FHWA

Figure 1. UHPC overlay construction in Buchanan County, Iowa.

Deteriorated steel beam ends are also of concern to bridge owners across the country, particularly in regions where there is a confluence of older steel beam bridges, failed expansion joints, and heavy use of deicing salt. A novel UHPC-based solution encases the deteriorated end region to provide an alternate load path around locally corroded cross sections. Researchers at the University of Connecticut developed and supported the first deployments of this solution [Zmetra et al. 2017]. Researchers at FHWA, in collaboration with the original researchers, are further investigating and expanding the applicability of this solution.

STRUCTURAL PERFORMANCE OF PRIMARY BRIDGE ELEMENTS

Some of the earliest full-scale tests of UHPC in primary bridge elements were conducted by FHWA [Graybeal 2006]. At the time, UHPC was promising but not practical given the lack of knowledge surrounding performance and construction methods. U.S. bridge owners and designers have recently shown renewed interest in using UHPC for primary structural elements. This shift can in part be attributed to the bridge community's use of UHPC in connections and thus their comfort level with this class of concrete. It can also be attributed to the growth in the number of available UHPC-class suppliers and the fact that precasters are beginning to develop their own in-house UHPC mix designs.

FHWA has an ongoing research program that is testing a suite of pretensioned UHPC bridge girders. Phase 1 of the effort is underway and consists of flexural and shear testing of lightly optimized I-girders. All girders are based on the PCEF cross section that is common in the mid-Atlantic region, with modifications to web widths, flange widths, and bottom flange heights. The girders have 24 0.7-inch diameter strands in the bottom flange spaced on a 2-inch by 2-inch grid. The web widths range from 3 inches to 7 inches. The girder depths range from 35 inches to 43 inches. The flexural and shear design of the girders includes capacity from the UHPC in tension. The shear design is differentiated from conventional concrete because the UHPC in the web resists the beam shear demand through principal tensile stresses oriented perpendicular to the compression strut. Most of the girders do not include any discrete steel reinforcement in the web.

Shear testing completed to date has demonstrated that the design methodologies being developed for UHPC structural elements are capable of conservatively predicting performance. In each case, the girders reached a capacity in excess of the design capacity, then failed through a diagonal tension localization action occurring in the UHPC in the web (see Figure 2).

Source: FHWA

Figure 2. Shear testing of a UHPC I-Girder.

GUIDE SPECIFICATION FOR STRUCTURAL DESIGN

Demand for UHPC use in primary bridge components (e.g., girders, piles) is growing, but the lack of structural design guidance in the United States is hindering advancement. Designing UHPC components in accordance with existing design specifications, such as the AASHTO Load and Resistance Factor Design (LRFD) Bridge Design Specifications, would usually create inefficient components from both the cost and the structural performance standpoint. Designing members according to nondomestic codes or specifications, such as the French supplement to the Eurocode [AFNOR 2016], is generally not an option. To meet the need for guidance, FHWA is working with the AASHTO committee on structural concrete design to develop a UHPC structural design guide specification [Graybeal and El Helou 2019]. Guide specifications are a common method used by AASHTO to introduce a promising new technology to the broader community.

FHWA, through its structural concrete research group, is crafting this document to address the highest priority needs. Specifically, the draft guide specification provided to AASHTO will propose a framework that defines UHPC, describes key parameters and associated test methods to determine those parameters, and offers guidance on appropriate methodologies for the structural design of primary bridge components. UHPC will be defined as a tension strain hardening fiber reinforced concrete with a very high compressive strength and exceptional durability. A first principles approach will be used, and measured mechanical behaviors (e.g., tensile and compressive responses) will be integrated into structural behaviors (e.g., flexure and shear) to develop conservative capacity predictions. Full-scale structural test results as well as experiences in international jurisdictions with developing UHPC design guidance will help guide the document development. It is anticipated that the draft guide specification will be delivered to AASHTO in 2021.

CONCLUDING REMARKS

The U.S. bridge community is embracing UHPC as a promising new solution. Owners are interested in the opportunities it presents for novel, durable structural components. Designers are interested in using UHPC for longer spans, lighter cross sections, and stronger piles. Maintenance professionals are interested in armoring their structures, particularly structures already deteriorating, with layers of UHPC. As the U.S. bridge community continues to learn about UHPC, it is clear that new solutions addressing long-standing performance, economic, and constructability challenges will continue to be developed.

REFERENCES

Association Française de Normalisation (AFNOR). 2016. "National Addition to Eurocode 2 – Design of concrete structures: Specific rules for Ultra-High Performance Fibre-Reinforced Concrete (UHPFRC)." NF P 18-710.

Brühwiler, E., and E. Denarié. 2013. "Rehabilitation and Strengthening of Concrete Structures Using Ultra-High Performance Fibre Reinforced Concrete." *Structural Engineering International*, 23; 4:450–457.

El Helou, R., and B. Graybeal. 2019. "The UltraGirder: A Design Concept for a 300-foot Single Span Pretensioned Ultra-High Performance Concrete Bridge Girder." *Proceedings of the 2nd International Interactive Symposium on Ultra-High Performance Concrete*. 9 pp.

Graybeal, B. 2006. "Structural Behavior of Ultra-High Performance Concrete Prestressed I-Girders." FHWA Report HRT-06-115. 104 pp.

Graybeal, B., and R. El Helou. 2019. "Development of an AASHTO Guide Specification for Ultra-High Performance Concrete." *Proceedings of the 2nd International Interactive Symposium on Ultra-High Performance Concrete*. 9 pp.

Graybeal, B., and Z. Haber. 2017. "Ultra-High Performance Concrete for Bridge Deck Overlays." FHWA, U.S. Department of Transportation. FHWA-HRT-17-097. 16 pp.

Zmetra, K., K. McMullen, A. Zaghi, K. Wille. 2017. "Experimental Study of UHPC Repair for Corrosion-Damaged Steel Girder Ends." *ASCE Journal of Bridge Engineering*. 22:8.

ACCELERATED AND RESILIENT REPAIR OF BRIDGE COLUMNS

Shamim A. Sheikh, Ph.D., FCAE, University of Toronto, (416) 978-3671, sheikh@ecf.utoronto.ca

ABSTRACT

Upgrade and repair of existing structures is an expensive and time consuming process. In this research, an accelerated procedure was developed for the repair of bridge columns damaged primarily by the corrosion of steel. The procedure was used for the retrofit of columns in a major highway bridge and monitored for their long-term performance. The procedure involved building of columns to their original shapes and wrapping them with glass FRP. Monitoring included measurement of strains in FRP and evaluating corrosion potential and risk. The field data showed sound performance of the repair and continuous reduction of corrosion over the years.

INTRODUCTION

There is a large inventory of existing bridges that have become deficient as a result of corrosion of reinforcing steel. Upgrade and repair of these structures is an expensive and time consuming exercise in most cases. For structures such as bridges, it is especially serious considering the disruptions in traffic and related costs. Corrosion of steel is accelerated in regions where de-icing salts are used to clear the roads of the snow and ice. The chloride from these salts contaminates the concrete and is very corrosive for the reinforcing steel. Expansion of steel caused by corrosion results in expansive forces that causes delamination and removal of concrete cover further exacerbating the process and reducing load carrying capacity of structures. Figure 1 shows such a bridge with damaged corroded columns and girders. The concrete cover was completely spalled off in a number of columns and the effectiveness of spiral steel was almost completely lost.

Fig. 1. Highway Bridge damaged by steel corrosion

Traditional methods of repairing such a structure would require a number of steps such as providing temporary supports for the structure, removal of contaminated and damaged concrete from the columns, replacement of corroded steel with new steel, and building of columns to their original shapes with new concrete. Each of these steps involves costly operation that takes time to complete. The costs associated with the disruptions in traffic and the resulting chaos are enormous and difficult to quantify.

In the research presented here, an accelerated procedure was developed for the repair of columns such as those shown in Figure 1. It was stipulated that if the access of water and oxygen into the retrofitted columns could be stopped or at the very least minimized, the corrosion process can be slowed down if not completely stopped. This required providing an impervious layer on the outside and effectively sealing the columns from the environment as far as the water and oxygen ingress was considered. The contaminated concrete could thus be left inside the members as long as it is reasonably sound. It was also felt that the corroded steel can also stay in place and additional reinforcement can be provided to compensate for the reduction due to corrosion. Only the spiral steel was observed to have been corroded in all the columns. The materials selected for replacement of concrete to build the columns included different types of grouts including one based on the expansive cement especially developed for such applications. Reinforcement provided consisted of glass fiber reinforced polymer wraps.

EXPERIMENTAL WORK

Columns under concentric compression

The research based on which the repair techniques were developed involved simulating the behavior of the damaged and repaired columns in a laboratory study using half scale models of the field columns and testing them under axial load (1). In this test series discussed here, four column specimens, 406 mm in diameter and 1.37 m long, each reinforced with 6-20M longitudinal reinforcing bars and 10M spirals with 75 mm pitch were constructed. Regular weight concrete with specified compressive strength of 30 MPa and the steel bars with 400 MPa yield strength were used. Three of these four specimens were subjected to accelerated corrosion to reproduce the damage similar to that observed in the field.

Figure 2 shows three of these columns at different stages of investigation. One column shows the damage due to corrosion of steel which resulted in complete loss of concrete cover as was observed in the field columns. It was observed that as in the field columns, corrosion was mainly limited to spiral. Of the four columns in this test series, one column was not subjected to the corrosion process and one corroded column was not repaired. These two columns acted as control specimens against which the performance of the repaired columns could be evaluated to judge various repair techniques for their abilities to upgrade the columns. The two control columns also provided a direct comparison to evaluate the loss of a column's load carrying capacity and the deformation capacity.

Fig. 2. Columns at various repair stages

Two corroded columns were repaired using two different accelerated retrofit techniques with the aim of minimizing the time required to complete the field work and the total cost (Figure 2). In each of the procedures investigated, the corroded steel and the contaminated concrete were not removed from the damaged column. Only loose concrete and debris were cleaned with a steel brush. The columns were built to their original shapes with different types of grouts before wrapping them with GFRP. Savings in cost and time for repair primarily stems from the fact that contaminated concrete and corroded steel were left inside the repaired column. It was observed in the field as well as in the lab experiments that the corrosion was limited to the transverse spiral reinforcement only and the longitudinal steel bars were not damaged.

One column was repaired with grout based on the expansive cement especially developed for such applications (exp-repaired) by Sheikh et al (2). A 3 mm thick polymer sheet was bent around the damaged area of the column and held in place with five clamps so as to act as formwork for the column repair. The expansive cement grout was then poured in place. Four hours after grouting, the column was wrapped with two layers of GFRP on top of the 3 mm thick polymer formwork sheet.

A commercially available rheoplastic, shrinkage-compensated grout containing non-ferrous fibers named Emaco was used to build the second column to its original shape. The repair patch was covered with epoxy coating to avoid direct contact of GFRP with the new cementitious material. After 24 hours of curing, the column was wrapped with two layers of GFRP. All the columns were stored in the laboratory at room conditions with temperature of about 23°C and 50% relative humidity until testing.

The barrier between the GFRP and the fresh grout was used in this study because, on the basis of the lab studies in which fibers alone were immersed in sodium hydroxide solution, researchers (e.g Uomoto and Nishimura 1999) had reported that glass fibers were adversely affected by exposure to alkalis. The GFRP system used in the lab specimens and for the field work was based on nominally 1.25 mm thick fabric with glass fibers oriented in one direction and sparsely spaced aramid fibers in the transverse direction. The

tensile strength of the GFRP was 563 N/mm width averaged from 8 coupon tests. The tensile behavior of the GFRP was essentially elastic until rupture at an average strain of about 2.28%.

Figure 3 shows the results from the tests on columns under axial load. It can be seen in the figure that damage caused by corrosion of the spiral and the loss of concrete cover resulted in about 20% reduction of the axial load carrying capacity of the column compared with the healthy undamaged column. Reductions in ductility and energy dissipating capacity were even more significant. Figure 4 shows the columns after their tests. While the undamaged healthy column displays the role of spiral reinforcement in keeping the integrity of the column core intact, the corrosion in the damaged column rendered the spiral steel completely ineffective. Pitting corrosion created weak spots where the spiral ruptured at relatively small axial strain in the column. The ruptured pieces of the spiral that flew off the column during testing are shown in Figure 5. The pitted corrosion can be clearly seen at several locations including points of rupture. Confinement that is needed at large strains is obviously not available in the corroded columns.

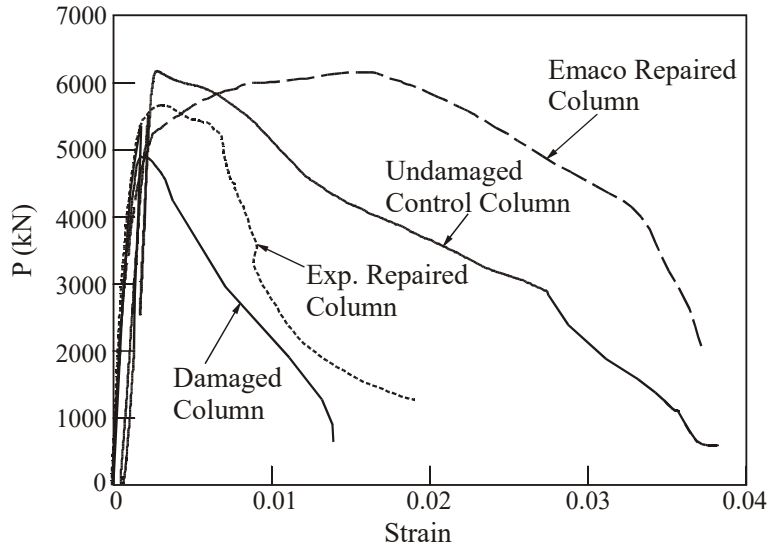

Fig. 3. Behavior of columns under axial 1oad

EMACO Repaired | Expansive Repaired | Damaged Control | Undamaged Control

Fig. 4: Columns after testing

Fig. 5. Ruptured pieces of spiral

The two repaired columns displayed improved behavior compared with the damaged column. The Emaco-repaired column showed better behavior than the original healthy column with substantially higher ductility and energy dissipation capacity. The axial load capacities of the two columns were similar. The exp-repaired column, however, did not perform as well as the Emaco-repaired column. The main reason was the premature failure of GFRP wrap. As the load on the column increased, the plastic sheet of the formwork opened out and engaged the GFRP wrap creating large local strain and rupture of the wrap, and hence failure of the column. Figure 4 clearly shows the localized failure of GFRP wrap due to the opening of the formwork sheet in the Exp-repaired column.

Columns under Simulated Earthquake Loads

The specimens in this second research program were designed to evaluate the effects of FRP retrofitting on the performance of columns under simulated earthquake loads (4). Each of the twelve columns in one test series of this program was 356 mm in diameter, 1.47 m long and cast integrally with a stub of dimensions 510×760×810 mm. All columns contained six 25M longitudinal bars uniformly distributed around the core. Clear concrete cover was 20 mm. The spirals consisted of US # 3 bars. Figure 6 shows a specimen in the Column Test Frame especially designed to test columns under axial load and lateral displacement excursions.

Fig. 6. Column tested under simulated loads

The moment-curvature responses of the critical plastic hinge regions of three columns that were tested under lateral displacement excursions while simultaneously subjected to a constant axial load of about 27% of the axial load capacity are compared in Figure 7. While the details of the entire test program are beyond the scope of this paper, pertinent information on the column design are provided in the figure.

Column specimen S-2NT contained spiral reinforcement which met the requirements for seismic design of various design codes of the time (5,6). This specimen represents a healthy column. Specimen S-4NT contained spiral steel at 300 mm spacing representing a deficient column with respect to transverse reinforcement. The presence of the concrete cover in Column S-4NT would overestimate its strength compared to that of a column damaged by corrosion that has lost the concrete cover, but this would only be true at small deformations prior to the loss of cover under increasing lateral displacement excursions. Column ST-5NT contained spiral steel at 300 mm spacing and was retrofitted with one layer of GFRP wrap. This specimen thus represented a repaired column in which the corroded spiral steel was not replaced and it was built to its original shape followed by the installation of a GFRP wrap.

A comparison of the moment-curvature responses of Specimens S-2NT and S-4NT underlines the importance of the spiral steel and its spacing on the seismic resistance of columns. Strength, ductility, energy dissipation capacity and the number of cycles of inelastic excursions that a column can sustain depend on the effectiveness of the spiral steel and the confinement it provides. The deficiency of the column caused by the reduced amount of spiral steel and its larger than required spacing could be easily overcome by the addition of only one layer of GFRP wrap as shown by the

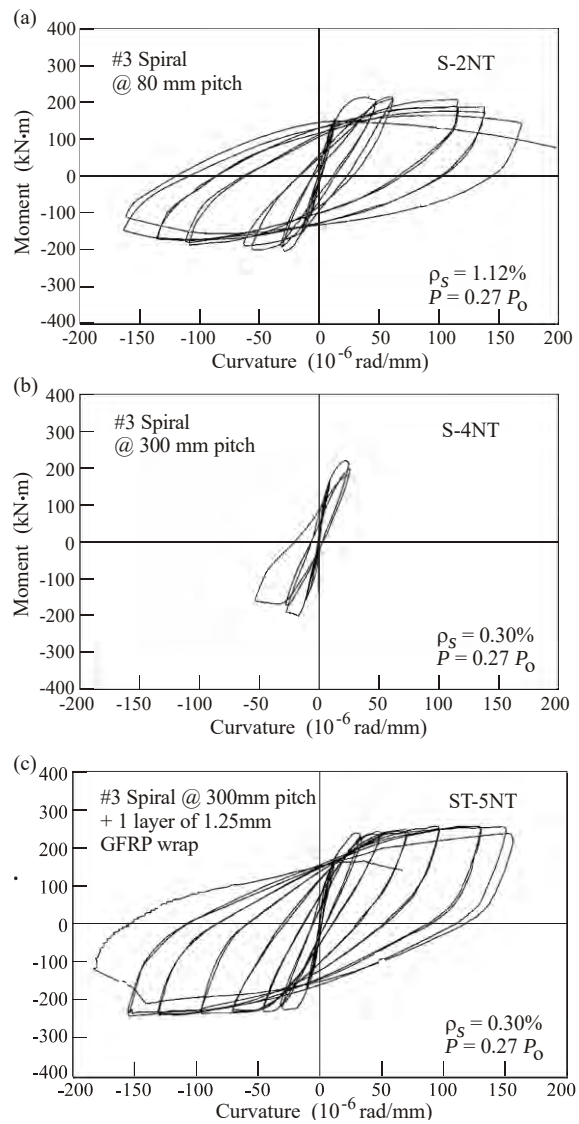

Fig. 7 Moment-curvature behavior of columns

response of Specimen ST-5NT. Strength, ductility and energy dissipation capacity of the GFRP-retrofitted column ST-5NT are similar or superior to those of the control column S-4NT that met the code requirements.

FIELD WORK ON COLUMNS

The bridge structure shown in Figure 1 was repaired using the techniques developed during the research work briefly described above. Both columns and girders were repaired but only the column retrofit is discussed in the following.

Most of the columns were patched with Eamco grout followed by GFRP wraps but a few columns were built to their original shape with expansive cement grout or commercially available non-shrink grout. As discussed above, the corroded steel and the contaminated concrete were not removed from any of the columns. Only the loose concrete was removed with a steel brush.

Fig. 8. Formwork used for expansive cement grout

Emaco-based mortar is rheoplastic which did not require any formwork for the repair of columns. For expansive cement based grout and the non-shrink grout, steel formwork was used instead of the plastic sheet formwork that caused premature failure observed in the specimen tested in the lab. The grout was pumped in place to build the columns as shown in Figure 8.

Three of the field columns, one each repaired with Emaco, expansive cement and non-shrink grout were instrumented and monitored for their long-term performance. About twenty hours after grouting, the formwork for the column repaired with expansive cement was removed. After inspecting the repaired surface for any flaws, the column was first wrapped with a thin polyethylene sheet and then two layers of GFRP with glass fibers aligned in the circumferential direction to confine the column (Figure 9). Polyethylene sheet acted as a barrier between the new grout and glass FRP. Since the bond between GFRP and grout/concrete was not of any concern, the presence of the polyethylene sheet was not considered to have any effect on the column behavior under load.

Fig 9. GFRP wrapping of filed columns

Three days after the grout application, the column was instrumented with six strain gauges on the FRP in the circumferential direction, two each, 180° apart, at mid-height, 750 mm above and 750 mm below the mid-point. The column repaired with non-shrink grout was treated the same way as the one repaired with expansive cement except that the formwork was removed four days after grouting. In the Emaco-repaired column, a protective epoxy coating was applied before the FRP wrapping and instrumentation.

Monitoring of field columns

In addition to measuring the lateral strain on the surface of the repaired columns, corrosion activity was also monitored with the help of three half cells (Silver/Silver Chloride) embedded in each of the three field columns discussed above. The cells were located at top, middle and bottom of the columns. The corrosion potential from these cells was measured in mV at regular intervals for more than 9 years. Figure 10 shows the

lateral strain measured on three columns over a period of about two years. The strain values were observed to be as expected. Column 124-1 containing expansive cement showed substantial expansion while no significant lateral strain was measured in FRP in the other two columns, 124-2 and 124-3 that were repaired with non-shrink and Emaco grout, respectively. The maximum expansion of about 0.16% was observed in Column 124-1 at ten days after grouting which settled at about 0.14% at later age. Lateral GFRP strain in all columns remained fairly constant for about two years indicating stable expansive cement behavior and no significant creep of GFRP.

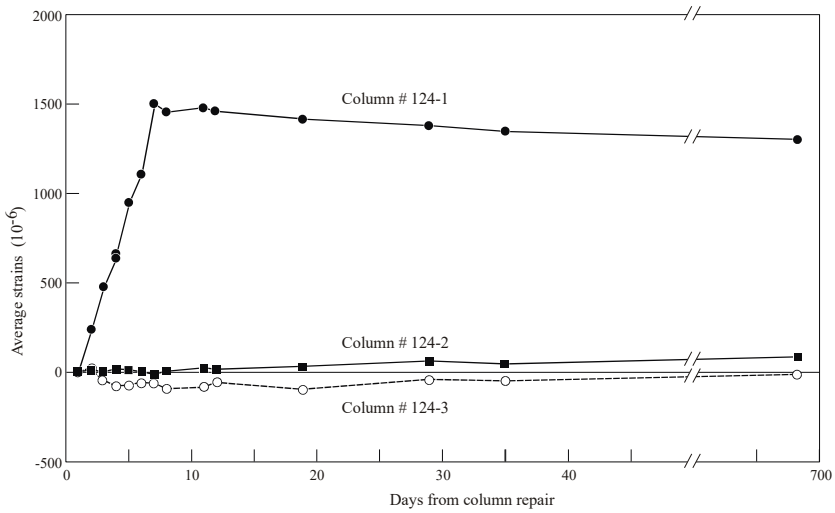

Fig. 10. Transverse GFRP strain in repaired colums

Corrosion activity recorded by half cells is shown in a graphical form in Figure 11 which displays the average corrosion potential in three columns at different locations along their height. The corrosion potentials can be used to provide some indication of the probability of corrosion activity in the columns at the time of the measurement (Broomfield 1997). The risk of corrosion thus determined is shown along Y-axis on the right side of the figure. Reduction in the corrosion activity and the reduced risk of corrosion over the years can be clearly seen in the figure. The average risk of corrosion in three columns at different locations along their height has reduced from high to low in about six years and remained low afterward. Monitoring of the corrosion activity was terminated at 100 months.

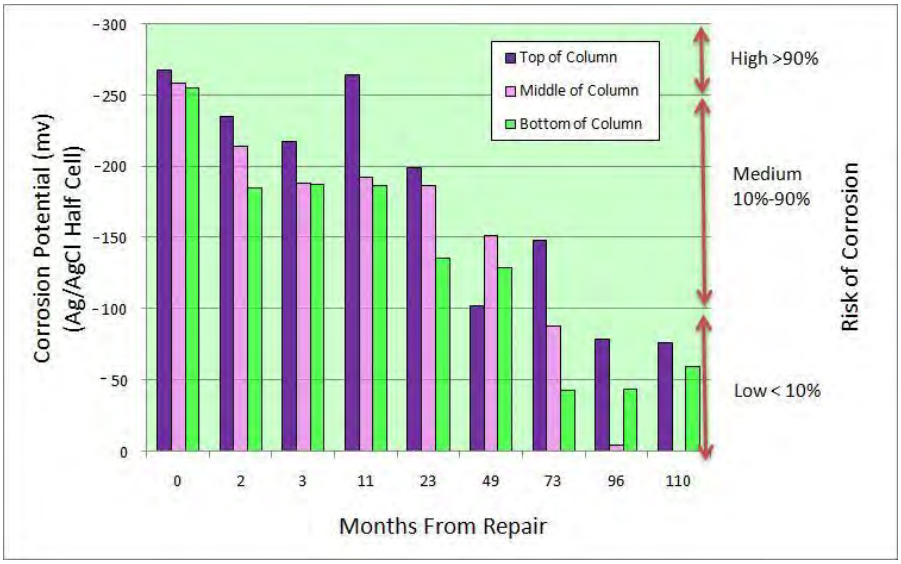

Fig. 11. Corrosion activity in repaired field columns

Figure 12 shows one of the columns before and just after the repair. The same column in its current condition is also shown in the figure. It is clear that after more than 22 years of service, the repair technique

has stood the test of the time and performed flawlessly in an excellent manner. Traditional repair techniques have generally required a repeat of repair procedure every 8 years or so in similar cases.

a. Pre-repair *b. After repair in 1996* *c. Current condition*

Fig. 12. Sustainability of the repair techniques

CONCLUDING REMARKS

A large inventory of structures exists in North America and elsewhere where corrosion of steel has made these structures deficient. Efficient, cost effective, durable and quick repair techniques are needed to address this issue and repair the structures without causing undue strain on regular activities. In the research reported in this paper, a feasible solution has been described in which the corroded steel and contaminated concrete is left in place and the structure is retrofitted with special grouts and glass FRP wrap. The proposed techniques were investigated in the laboratory on half scale models of the bridge columns and then used in the field. Dozens of columns in a bridge on a major highway in Toronto were repaired of which three columns were monitored continuously for over 9 years. In the typical Toronto weather with temperatures ranging between -22°C and +38°C and a lot of snow during the winter, the performance of the repaired columns has been remarkably sound. Monitoring of the columns showed that the corrosion activity and the risk of corrosion have reduced consistently with time and changed from high to low in about 6 years. The repair techniques also impart excellent seismic resistance to the columns by providing confinement to the concrete.

REFERENCES

1. Sheikh, S. A., “Field and Lab performance of Bridge Columns Repaired with Wrapped GFRP”, Canadian Journal of Civil Engineering, National Research Council, Canada, Vol. 34, No. 2, April-June, 2007
2. Sheikh, S.A., Fu, Y. and O'Neill, M.W. 1994. Expansive cement concrete for drilled shafts. ACI Materials Journal, 91(3): 237-245.
3. Broomfield, J.P. 1997. Corrosion of Steel in Concrete. E&F Spon, London, UK, 45 p.
4. Sheikh, S.A. and Yau, G. 2002. Seismic behavior of concrete columns confined with steel and fiber-reinforced polymers, ACI Structural Journal, 99 (1): 72-80.
5. ACI Committee 318, 1999, “Building Code Requirements for Structural Concrete (ACI 318-99) and Commentary (318R-99),” American Concrete Institute, Farmington Hills, Mich., 391 pp.
6. CSA, 2004, Design of Concrete Structures, Standard CSA-A23.3-04, Canadian Standards Association (CSA), Rexdale, Ontario, Canada.

USING EXISTING AND NEW INNOVATIVE METHODS TO ACCELERATE REHABILITATION OF FOUR I-89 BRIDGES

Scott Burbank, PE, VHB, (802) 497-6157, sburbank@vhb.com
John Whittaker, Kubricky Construction Corp., (518) 792-5864, jwhittaker@dacollins.com

ABSTRACT

The Vermont Agency of Transportation (VTrans) used Accelerated Bridge Construction (ABC) with cross-overs and alternating traffic patterns on Interstate 89 (I-89) in Colchester, Vermont, to complete four deck replacement projects over six extended weekend closures. Several existing—but new to Vermont—practices as well as new innovative procedures and materials were used to successfully complete the deck replacements of all four bridges.

INTRODUCTION

For travelers to and from Burlington, Vermont—the state's most populous city and a major economic center—Interstate 89 provides a critical north-south link for commuters from Franklin, Grand Isle, and northern Chittenden Counties (See Figure 1). When the VTrans identified the need to rehabilitate Bridges 76 N&S and 77 N&S in nearby Colchester, it became a priority to minimize the inconvenience to the 2,500 vehicles that pass through this corridor each hour during the morning and evening commute. Traffic volumes drop through the project area overnight and during the weekends. To complete the bridge deck replacements and maintain two lanes of traffic along I-89 during the weekday peak traffic times, it was necessary to use Accelerated Bridge Construction (ABC) techniques.

Doing so required creativity, innovative techniques, and the use of existing practices that were new to the State of Vermont. VHB worked closely with Kubricky Construction Corporation (KCC), VTrans' contractor for this Construction Manager/General Contractor (CM/GC) project. VTrans, VHB, and KCC decided to use AccelBridge's proprietary prestressing methodology as the preferred method to achieve the deck replacements within the required 59-hour timeframe, between Friday at 7:00 PM, when the evening commute tapers off, and the start of the Monday morning commute at 6:00 AM. This project was the first in Vermont to use this methodology. In addition to AccelBridge's proprietary prestressing system, the project required the use of a flowable, non-shrink, quick-curing grout for the beam haunches and

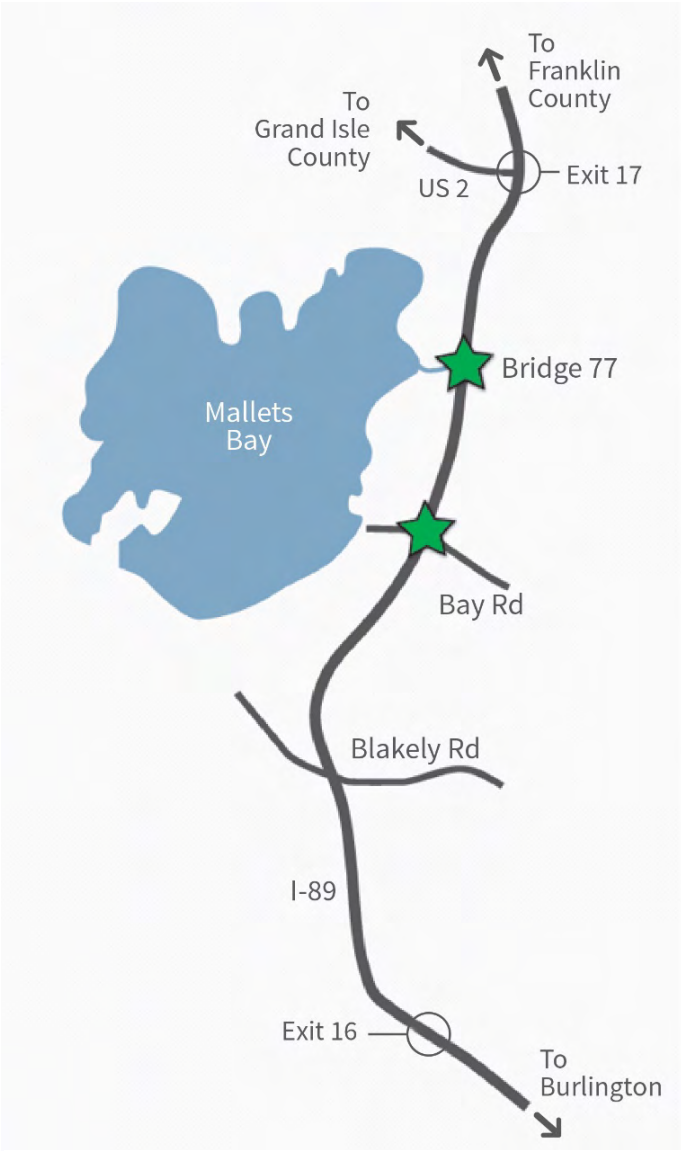

Figure 1 - Location of Bridges 76N&S and 77N&S

shear pockets of the precast concrete deck panels as well as a high-performance, rapid-setting concrete for the mid-span closure pour. Finally, a NYSDOT Class J Concrete, which is a stiffer concrete with a higher cementitious material, smaller aggregate and a higher volume of sand was used for the slip forming of the bridge rail—a process that had not previously been used in Vermont.

To rehabilitate the four I-89 bridges in the allotted time, the team used a new-to-Vermont existing traffic management technique. This allowed KCC access to one lane of the bridge one week before the weekend closure. By alternating the direction of travel on the left lane of the barrel where the bridges were not under construction, it was possible to have two lanes of traffic in each commuting direction in the morning and evening, allowing KCC to demo half the bridge deck the week before a weekend closure. This approach, used more often in larger cities, is unusual for Vermont. As a result, educating the public about what to expect was an important component of the traffic control plan's success. The team coordinated closely with state and local officials and developed an Incident Command System in the event the interstate should shut down or be reduced to one lane due to traffic accidents.

Using this combination of ABC techniques, unique materials, and traffic management, the four bridge decks were successfully replaced on an accelerated schedule with minimal impacts to the traveling public.

EXISITNG BRIDGE FEATURES AND SITE CONSTRAINTS

The four bridges are two pairs of I-89 bridges (76N&S and 77N&S) constructed in 1964 when the interstate was constructed. The bridges consist of a paved concrete deck supported on continuous steel beams spanning a local road, Bay Road, and Mallets Creek, which flows immediately into Lake Champlain. Each bridge carries two lanes of traffic and consists of two 12-foot-wide travel lanes with a 3-foot-wide shoulder and 2'-6" wide curbs with New England Traffic Consortium (NETC) 2-rail bridge rail. The overall width of the bridges is 35'-0" (See Figure 2).

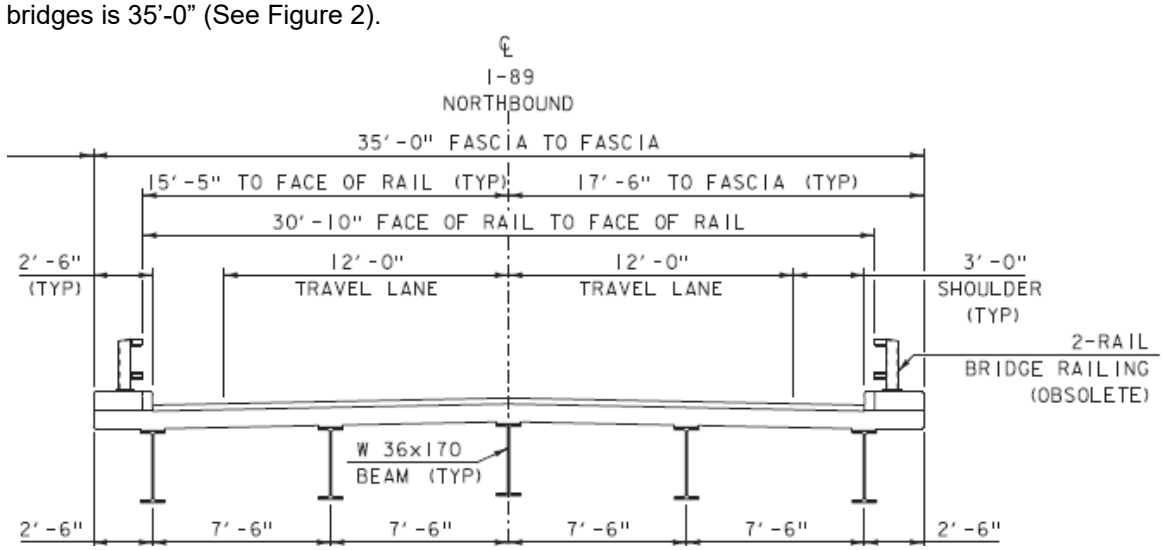

Figure 2 - Existing Bridges 76N&S and 77

Bridges 76N&S are 154 feet long with three spans, 43'-68'-43', and a 19-degree skew. Bridges 77N&S are 185 feet long with three spans, 50'-85'-50', and a zero-degree skew. All four bridges consisted of five steel beams spaced at 7'-6". Bridges 76N&S had residual camber placed into the beams. It was unclear if shear connectors were used on any of the four bridges, so deck coring was completed during design to verify they were not present. Each bridge had an expansion joint between the bridge deck, and a backwall that was supported on the abutment and independent of the bridge deck. The fixed end had a curtainwall connected to the existing concrete deck and the ends of the steel beams, making it independent of the abutment. All four concrete bridge decks were deteriorating, with Bridge 77S being structurally deficient with a Deck Condition Rating of 4.

Bay Road is a local road that connects the Colchester Bay Area with US Route 2/7. There is a private campground immediately adjacent to I-89 on the northwest corner of Bridge 76S. In addition to vehicular traffic, Bay Road has a shared-use path on its south side that goes under the bridges (see Figure 3) and connects neighborhoods in the Colchester Bay area with those in Colchester Center. The shared-use path is also part of the Champlain Bike Way, which goes along state and local roads along Lake Champlain from southern Vermont to the Vermont/Canadian border. In addition to a local vehicular detour, a bike detour was required when Bay Road was closed for construction on Bridges 76N&S.

Figure 3 - Bridge 76S Looking East

Mallets Creek is an environmentally sensitive area with wetlands at the edges of the channel (see Figure 4) and a fish-breeding habitat. Due to its proximity to Lake Champlain, additional Vermont state permitting was required for the installation of a causeway to allow for the placement of cranes between and near the ends of the bridges during construction.

Figure 4 - Bridge 77N Looking North

In addition to the bridges' physical condition and site constraints, traffic volumes on the bridges varied from the morning commute, which had a large volume of traffic heading southbound, to the evening commute, which had a large volume of traffic heading northbound. This fluctuation required two lanes be available in the morning for southbound traffic and two lanes in the evening for northbound traffic. From past experience, VTrans had determined that the vehicles per hour (VPH) volume needed to be less than 1300 if the interstate was to be reduced to a single lane; otherwise there would be significant traffic delays. Based on the traffic volumes, the interstate could only be reduced to one lane in both the northbound and southbound direction from 9:00 AM to 2:00 PM and 7:00 PM to 6:00 AM the following day. It also meant the interstate could be reduced to a single lane in each direction from 7 PM on Friday to 6 AM on the following Monday.

PROJECT DEVELOPMENT

Due to the need to accelerate the removal and replacement of the existing concrete backwall, curtainwall, and concrete deck, precast concrete was the appropriate choice for all three bridge elements. The issue, however, was the time between the morning and evening peak traffic flows and the desire to not impact the interstate traffic during the Memorial and Labor Day weekends, the Fourth of July week, and the Columbus Day weekend, which is also Canadian Thanksgiving. These holidays increase interstate traffic volumes; therefore, the use of CM/GC was selected for the collaborative design environment in order to implement an efficient and cost-effective bridge deck replacement project.

Preliminary Design

As it takes two to three years to develop a project from preliminary design to Contract Plans, VTrans decided to start the CM/GC process near the completion of the Preliminary Plans just before the start of final design. This would not only reduce the timeframe from when the CM/GC started on the project to when the project was constructed, but it would also allow the CM/GC to participate in the preliminary plan quantity and cost reconciliations and during the final plan development when most of the bridge deck replacement design would occur. While VTrans wanted the CM/GC to have input into and agree with the Traffic Control Plans (TCP), the overall method of managing traffic during construction was vetted prior to bringing the CM/GC on board and then further refined with the CM/GC's input.

As precast concrete deck panels where the preferred option, the preliminary design focused on how those panels would be configured. VHB reviewed half-width and full-width deck panels. Another issue was whether the deck panels needed to be post-tensioned or whether they could be placed on the existing beams with the shear pockets grouted in place without post-tensioning. During preliminary design, VHB looked at how the deck panels would interact with the existing curtain and backwalls and how the expansion joint would be handled. The first thought was to extend the precast concrete deck over the curtain and backwalls. The skew of Bridges 76N&S was also reviewed, and the use of grade beams was evaluated to eliminate the skew in the precast concrete deck panels by having the panels extend past the begin/end of the bridge and be supported on the grade beams so the ends of the panels would have a zero-degree skew. The final preliminary design concluded that full-width precast concrete deck panels with the deck panels on Bridges 76N&S matching the skew of the bridges would be used, and they would either be post-tensioned, or the AccelBridge System would be used to put the deck panel joints into compression.

VHB and VTrans agreed that post tensioning was not the preferred method based on the time constraints but wanted to get further input from the CM/CG before making a final decision. The precast concrete deck panels would also end at the begin/end of the bridge, and approach slabs would be placed at each end of the bridge and positively connected to the deck panels. The existing back and curtain walls would be removed and replaced with precast concrete walls that the precast concrete deck panels would extend over. The precast concrete backwall was easy to design as it is a free-standing precast element that was attached to the existing abutment with dowels (see Figure 9). The precast concrete curtain wall required pockets at each of the beam locations so that steel reinforcing could be placed through the existing holes in the ends of the steel beams and the pocket filled with concrete to allow the precast concrete curtainwall to be positively attached to the ends of the beams just like the existing curtainwall (see Figure 5). The expansion joint would be moved off the bridge to the end of the approach slab, which would be supported by a sleeper slab on the expansion end.

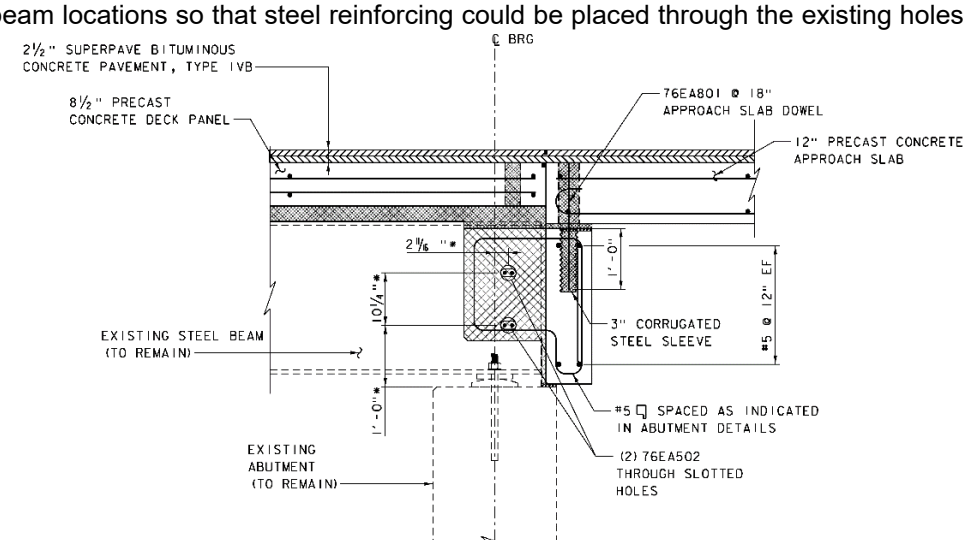

Figure 5 - Fixed End Precast Conc. Curtainwall & Approach Slab

In reviewing the traffic volumes, several concepts were developed, including removing a small portion of the existing deck and replacing it with a single precast concrete deck panel each night during low traffic volumes to closing the barrel over an extended weekend and removing and replacing the right half of the deck, then removing and replacing the left half the following weekend. All these concepts exposed weekday traffic to a joint between the existing and new bridge decks. The team had a window of 59 hours from 7:00 PM on Friday—when traffic volumes allowed for one lane in each direction—and 6:00 AM the following Monday when traffic volumes required two lanes southbound and one lane northbound. It was VTrans' and VHB's opinion that this timeframe did not allow enough time to demo the existing deck and replace it with precast concrete deck panels. Typically, when work is performed on an interstate bridge deck, traffic is either shifted over on the bridge to allow access to a portion of the bridge or sent to the left side of the opposing barrel using a cross-over to allow access to the entire bridge. This does not allow for two lanes in each direction during peak traffic volumes. In reviewing the traffic control options, it was decided that traffic would be managed using cross-overs, but the left lane of the opposing barrel would be multidirectional depending on the peak traffic demand. This allowed the contractor to have access to the left lane of the bridge while traffic was on the right lane of the bridge one week ahead of the weekend bridge closure. By allowing the contractor to demo half of the bridge deck a week ahead, the team agreed that the 59-hour period would be adequate for the removal of the remaining half of the bridge deck and the installation of the full-width deck panels over the entire length of the bridge.

Final Design and CM/GC

The first step in the final design process was to hire a CM/GC to assist with the design of the bridge deck replacement and further develop the traffic control plans. In addition to the CM/GC, an Independent Cost Estimator (ICE) was added to develop independent quantities and costs for each item at each plan submission milestone. The ICE acted as a check and balance to the CM's quantities and cost. VHB also developed quantities and costs for each of the plan milestones, including Final Plans, Pre-Contract Plans, and Contract Plans. The three quantity and cost estimates were reconciled at the end of each plan submission, and the Contract Plan reconciliation became KCC's bid. As the project was CM/GC, VTrans and KCC agreed on the project bid price based on input from the ICE.

For the precast concrete deck panel design and erection, the team felt that post tensioning was not the preferred method and opted for the AccelBridge System. The AccelBridge deck system had only been installed on three other projects in the world. It is simple for construction and can be put together rapidly with conventional materials, skills, and equipment.

There are two key components of the deck system: compressing the deck by jacking against the first precast concrete deck panel that is grouted and positively fastened to the steel beams and using epoxy in the match-cast joint instead of cast-in-place joints. This unique deck compression method is simple and economical. It saves material and labor associated with conventional post tensioning system yet retains the durability advantage of a compressed deck.

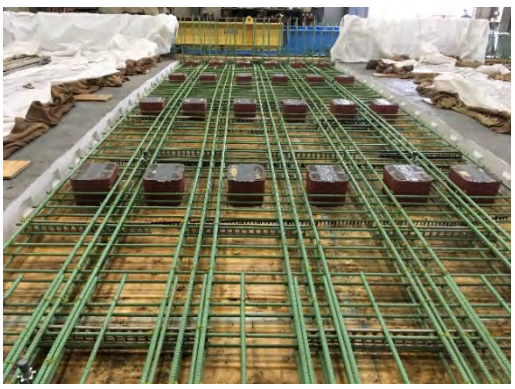

Figure 6 - Match Casting of Joints in Precast Concrete Deck Panel

The match cast joint is a proven construction detail in which the joint surface is clean and contains no rebar or post tensioning protrusions (see Figure 6). Such a simple detail not only reduces field labor time, but also enhances joint durability by eliminating the source of corrosion.

While the system lends itself to accelerated construction, to meet our 59-hour schedule, the grout still needed to achieve strength quickly. These materials were not readily available, and it was necessary for KCC to work with a local concrete producer to develop a rapid-set concrete mix design that would achieve the 2,500-psi required strength in six to eight hours. The development of this rapid-set, high-performance concrete became a critical path item as it would not be fully developed until the project was in the construction phase. VHB and KCC did extensive research to find a grout product that was flowable enough to grout the beam haunches and shear pockets of the precast concrete deck panels yet would achieve the required strength of 3000 psi in three hours versus traditional grouts that achieves this strength in 12 to 24 hours. Pro Spec Slab Dowel Grout, which is typically used for grouting slab dowels, was selected. Because it had not been used in this type of construction, KCC performed a mock-up of the steel beam with a precast deck panel to ensure the slab dowel grout performed as intended.

Additional precast elements that were reviewed and further modified during final design were the precast concrete backwalls, approach slabs, and sleeper slab. These elements were tailored to match KCC's means and methods. KCC also provided a constructability review of each design element, reducing the risk to VTrans and KCC during construction. The construction of the bridge rails was also vetted during final design; using slip forming to place the bridge rail is common in New York State, but not used in Vermont. VTrans agreed to the use of slip-forming, which required VHB to develop a special provision for this item, converting NYSDOT Type J mix into a concrete mix design more in line with VTrans' Construction Specifications.

In addition to providing insight into constructability, KCC reviewed and provided input into the TCPs. This task examined what could be done between peak traffic volumes and how to handle switching traffic patterns from peak to off-peak, then back to peak during the weekdays prior to the bridge closure. KCC also provided insight into temporary U-Turns and the area for equipment staging, which was ultimately placed in the median north of Bridge 76N&S and south of Bridge 77N&S. Because they would have instances where both bridges in either the northbound or southbound barrel would not be crossable, it was

necessary to allow construction vehicles in the opposing barrel to cross from that barrel's left lane onto the median and back onto the barrel that was closed between the two bridges.

PUBLIC OUTREACH

As these four projects were on the interstate, public involvement during design was minimal, but with Bridge 76N&S over a local road and a private campground on the northwest corner of Bridge 76S, it was necessary to coordinate with the Town of Colchester and the campground. Multiple meetings were held with Town officials, including the Public Works Director and the Deputy Police Chief, to review the project and its impacts on Bay Road, which would be reduced to one lane and closed during the weekend bridge closures. This coordination allowed the road and shared bike path to remain open or only be reduced to a single lane with alternating one-way traffic during town events. Coordination with the campground allowed visitors, including fifth wheelers, to access the site easily

Prior to the completion of the design phase, a Public Outreach Coordinator (POC) was hired to assist VTrans during construction. The POC attended the last meetings with the town and the campground prior to the start of construction and served as a point of contact for both. The POC developed and managed the project website, communicated updates by email, and maintained a 24-hour telephone hotline, providing the public with information in different formats.

In addition to the POC, the team developed an Incident Command System in the event of an incident on the interstate that required emergency services and/or closed the interstate. The ICS group included VTrans Design, Construction, and Operations personnel; the POC; VHB; KCC; Vermont State Police; and the fire, ambulance, and police for the Town of Colchester. The ICS not only established a command structure in the event of an accident, but also allowed local authorities to provide input and fully understand traffic control when responding to an emergency. The ICS meetings led to the installation of additional signage, emergency detour packages, and an additional emergency U-turn that all proved to be useful during the construction process. It also allowed the local police to know where along US Route 2/7 they should be stationed to assist in the event of an interstate closure. Additionally, once the traffic control was in place, VTrans flew the site with a drone and provided the town emergency personnel with an ortho that showed the location of the cross-overs, temporary traffic barriers, and U-Turns so they were able to navigate the site more efficiently when responding to an issue during construction.

CONSTRUCTION

Extensive preparation was required prior to the installation of the precast concrete deck panels. This work also needed to be performed on an accelerated schedule as the first Bridge Closure Period (BCP) started on July 12 and the preparation work did not begin until early May. For example, the permit for the causeway work at Bridges 77N&S did not allow any in-channel work until July 1, leaving only 11 days for the causeway to be constructed.

Preparation

During the inspection process, the team identified repairs to be made to the existing substructure, including not only Class 1 (removal and repair of existing concrete to the first mat of existing reinforcing) and Class 2 (removal and repair of existing concrete 3/4 of an inch beyond the first mat of existing reinforcing to a maximum depth of six inches) surface repairs, but also Class 3 (removal and repair of existing concrete to a depth greater than six inches) repairs under one of the bearings on Bridge 76S. This required the installation of a web repair plate to strengthen the existing beam and a jacking system to take load off the bearing to make the necessary concrete substructure repairs.

A temporary crossover was installed at both the north and south sides of the contract limits to detour traffic to the opposite barrel, effectively closing one side during construction. Work included the protection/modification of median drainage, filling of the median to a level profile with the existing road, and paving/striping the travel lanes. This crossover was initially built to only accommodate the NB barrel due to the existing roadway profiles. After completion of the first three BCPs, parts of this crossover were removed and regraded to accommodate the opposite barrel for the final three BCPs. Other work included the installation of six emergency pull-off locations, the installation of a permanent U-turn on the south end of

the project, a large detour and construction sign package, and the installation of a U-turn in the center of the job to be used for emergency services.

Since the time window available to perform this work was so short, a large amount of equipment, materials, and tools had to be brought in. Due to the limited access from one side to the other during construction, much of the equipment had to be doubled so that work could occur on each side of the bridges simultaneously. This required the installation of large staging areas on the north and south sides of the bridges at both locations. Due to the weight of the precast concrete deck panels, crane pads where installed using a large Geosynthetic Reinforced Soil System (GRSS) wall on the north side of the median between Bridges 76N&S as well as two causeways in the median on the south and north side of Bridges 77N&S. This allowed the use of smaller, wheeled cranes to erect the deck panels instead of larger crawler cranes. Finally, shielding was put in place on both NB bridges to protect the areas below against demo debris and slurry and act as an access platform to perform prep work to the beams and install the deck panels.

Deck Replacement

The bridge work was broken down into six BCPs, each made up of a 59-hour closure from 7:00 PM Friday through 6:00 AM Monday. All backwall work had to be performed before starting the deck replacements due to the short time period allowed during the closures. The first BCP included the excavation of the existing approaches down to the top of the existing abutment, removal of the existing backwalls/wingwalls, installation of precast backwall/wingwalls, backfilling, installation of new subbase, installation of precast sleeper slabs on the expansion end, and paving of the reconstructed areas at Bridge 77N.

During the week between the first and second BCP, temporary barrier was installed down the middle of the bridge deck and demolition was performed on half of bridge 77N. Saw cutters were used to cut the deck longitudinally down the middle, then transversely into equal sections so the existing deck pieces that were removed could be handled with the excavators. This saved time by reducing the amount of debris and labor required to break up the slabs using hydraulic hammers. After the removals, the beams were cleaned of debris, inspected for deterioration/potential repairs, and prepared for future welding of studs and haunch angles. BCP two consisted of the removal of the second half of Bridge 77N and the installation of the precast concrete deck panels, approach slabs, and preformed joint seal on the bridge. It also consisted of the same work performed in BCP one except it was completed on Bridge 76N.

Figure 7- Erecting Precast Concrete Deck Panels on Bridge 77S

After the existing deck was removed, the steel was surveyed to determine the necessary haunch elevations at each precast joint. Once these elevations were determined and the beams were cleaned, angles could then be welded to the top flange of the existing beams at the proper elevations. These angles were welded to the top flange similarly to that of a stay-in-place deck form, except steel straps where used in place of welding in the top flange tension zones. A piece of 1” foam would then be placed on the top of the outstanding horizontal leg of the angle to create a seal when the precast concrete deck panels were set in place. This would effectively create a formwork for the grout that was later poured to create the haunches.

After enough of the angles were welded in place, the first precast concrete deck panels were ready to be set (see Figure 7). This installation process worked from each end of the bridge; the first deck panel at each end became the anchor for the other deck panels when the precast concrete deck panels were jacked. Plastic shims were set in place on each beam at both joint locations to hold the deck panel at the correct elevation, which allowed the 1” foam to compress 1/4 of an inch to create the required seal for the haunches. Once they were set and determined to be in alignment, restraints were welded in place to hold the deck panels in alignment and hold them down when the deck panels were jacked. These restraints allow the deck panels to be jacked at a grout strength of 3500 psi, which was much less than the grout

design strength of 5000 psi. Studs were then welded in the pockets and grout was poured in those same pockets to create the haunches and lock the first deck panel on each end of the bridge in place. Precast concrete deck panels were then set working towards the center of the bridge. Epoxy was applied to the deck panel face and come-alongs were used to pull the deck panels together at a specified tension using a load cell to monitor the forces. As the deck panels were set in place, shear studs were installed in each of the pockets of the precast concrete deck panels.

Once all the precast concrete deck panels were set in place, an approximate 3'-6" closure pour was left remaining in the center of the bridge. Formwork was installed from under the deck panels using coil rod threaded into inserts that were cast into the precast concrete deck panels. This also created a location to set the hydraulic jacks in place to jack the deck panels and place them in compression. The deck panels were jacked once the specified grout strength (3500 psi) was reached in the end deck panel's shear pockets. Once the deck panels were jacked, reinforcing was installed in the closure pour between the jacks and Rapid Set High Performance Concrete (HPC) was placed between the jacks to keep the compression force locked into the deck panels (see Figure 8).

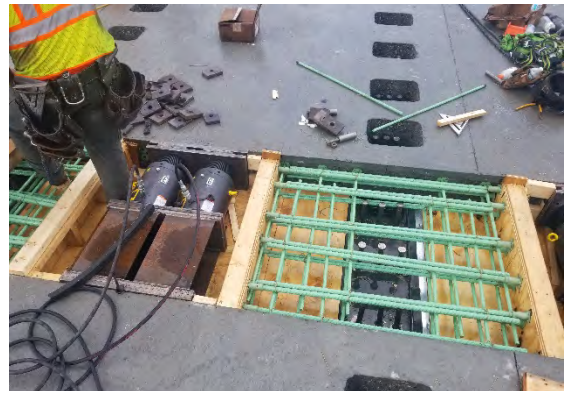

Figure 8 - Precast Conc. Deck Panels Closure Pour with Jacking and Reinforcing Installed (Bridges 77N&S)

After completion of the jacking and the placement of the first Rapid Set HPC pour, the haunches were grouted using the Slab Dowel Grout. The Slab Dowel Grout was mixed on-site from bags using large portable grout mixers and placed in the deck panel's shear connector pockets one beam at a time, working from the low point to the high point on each beam to assure that all voids were eliminated. After the Rapid Set HPC acquired a strength of 2500 psi, the tension was taken off the jacks and the jacks removed. Reinforcing and Rapid Set HPC concrete were then installed in the areas previously occupied by the jacks.

During installation of the deck panels, the temporary approaches installed in the previous weekend bridge closure were removed and the approach slabs were installed as four precast concrete panels with a 14" joint between each of the panels. Hoop bars extend from each of the panels into the joint and longitudinal reinforcing was placed in the hoop bars and Rapid Set HPC was placed in each of the closure pours between the panels positively connecting the panels together. The expansion end approach slab was positively connected to the precast concrete deck panel through a transverse closure pour. Longitudinal reinforcing extended from the approach slab panels and were spliced with headed dowels that were threaded into inserts at the ends of the deck panels (see Figure 9). The fixed approach slab was positively connected to the precast concrete backwall using vertical dowels (see Figure 5). The preformed joint was then installed between the approach slab and the sleeper slab on the expansion end.

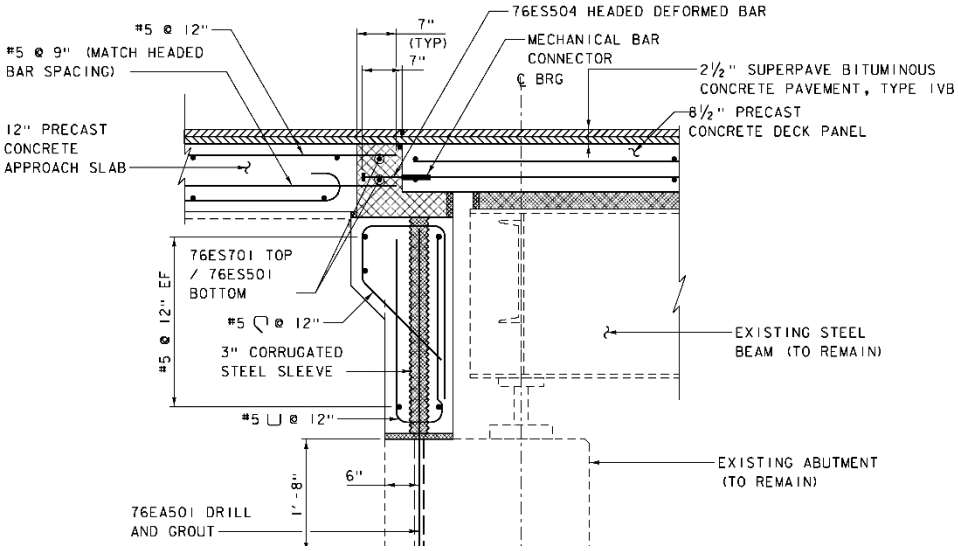

Figure 9 - Exp. End Precast Conc. Backwall & Approach Slab

Braced temporary barrier was set across the bridge deck on the east and west side of the deck to protect traffic until the bridge rail could be slip formed which occurred during BCP three for Bridge 77N and at an additional off-peak bridge closure for Bridge 76N. This same deck replacement process was then performed on Bridge 76N during the third BCP.

After completion of the NB barrel, including the slip formed bridge barrier, the crossovers were removed/readjusted to accommodate the SB barrel. During this process, the shielding was jumped from the NB bridges over to the SB bridges in preparation of demo, and equipment/tools were staged to accommodate construction on the south side of the interstate. The entire process was repeated, except Bridge 76S was closed first due to its proximity to the campground.

LESSONS LEARNED

As with all projects, regardless of the amount of planning, coordination, and collaboration, there will always be takeaways and the Colchester I-89 Deck Replacement Project is no exception. These combined bridge deck replacements were the first in the State of Vermont to use the AccelBridge System, a rapid-set high performance concrete and grout that achieved the required strengths within 8 and 5 hours, respectively; the first to use the left lane of the opposing barrel of an interstate in one direction in the AM and another direction in the PM; and the first to develop an ICS plan for a construction project.

Design

By using the CM/GC process, the owner (VTrans), designer (VHB), and contractor (KCC) conducted biweekly or monthly coordination meetings depending on the need, focusing on construction and the use of materials. Notes from these meetings were taken, distributed, and agreed upon, however not all the information agreed upon during those meetings was incorporated into the Contract Plans. It is important that the items discussed and agreed upon at those meetings be included in the Contract Documents for consistency, and to prevent issues that were resolved during design from becoming issues again during construction. All these issues were resolved during construction; however, it would have been more efficient if the agreed-upon information were included in the Contract Documents.

Traditionally, VTrans' bridge closure periods require specific work to be completed. If that work is not completed, the contractor does not receive an incentive and it is charged a disincentive until the work is completed. For this project, we specified that in addition to the items required to open the bridge to traffic—the precast deck panels, approach pavement, temporary traffic barrier—that the modular expansion joint and the approach slabs be completed as well. When the bridge closure period was underway, it became clear that the modular expansion joint, which is weather dependent, and the approach slabs were not detrimental to public safety, and temporary measures could have been used to open the bridge to the traveling public without decreasing safety. The incentive could have been modified, if the approach slabs were not installed, or kept the same if the moisture content would not allow the installation of the modular expansion joint due to a rain event.

It is important to have the right people involved with the CM process, including not only the design staff, but also those who will have influence over the project during construction. While the CM/GC process was successful for this project, it would have been beneficial to have KCC's superintendents and VTrans construction staff present at most of the collaboration meetings. To accommodate those staff working remotely on other construction projects during the project design, video or conference calls could be used to allow their participation.

Construction

The innovative nature of the construction method and the Vermont location made it difficult to get the materials approved through the VTrans approval process. For example, Rapid Set HPC concrete (Figure 10) drove the critical path in multiple instances throughout the closures. The project required a mix design that would reach 85% of its capacity in six hours and provide enough working time to properly install the product on site. The product still needed to meet the 5000-psi strength requirement,

Figure 10 - Placement of Rapid Set HPC at Closure Pour after Removal of Jacks

which could not be confirmed until the breaks were performed 28 days later. Although the mix was created, it was difficult to get approval in accordance with the VTrans standard specification as many of the notices and necessary break data could not be acquired before construction. This risk could have been mitigated if the process had started earlier.

The proper sampling and curing of the grout/concrete drove the weekend closures. Although the ambient temperatures were not low on the first two bridges, the grout still took longer than expected to come to strength. After completing the first bridge, it was determined that samples needed to be placed at the pour locations as more heat was generated from the larger pours than was generated by the 2x2 cubes exposed to the elements. Blankets were also used to maintain some of that heat, allowing the strength gain to happen more rapidly. This allowed the materials to perform as expected and allowed KCC to stay on schedule.

Redundancy was key. KCC had to be prepared for the worst-case scenarios with the materials and means to fix potential issues. Location was a challenge: if something went wrong, how would it be fixed in the middle of the night on Sunday in northern Vermont? This was mitigated by having subcontractors and suppliers on-call for weekend shutdowns, ready to help perform an install or get material on site. Finally, the schedule was always changing, and subcontractors had to be managed to avoid delays. Additionally, subcontractors had to arrive early, so they were prepared to begin work immediately when needed. If the schedule was running behind due to weather or other issues, this created idle time for the subs and cost that was not originally identified during the estimating process.

CONCLUSIONS

All four bridge decks were successfully removed and replaced over six weekend closures. The successful completion of the four deck replacement projects, including the addition of approach slabs and the sleeper slab on the expansion end, confirms that ABC projects with short closure durations can be effectively developed and executed with proper planning, design, support, public outreach, and contractor coordination. Furthermore, successful ABC projects are a benefit to their communities, transportation agencies, and the public as they reduce impacts to natural and cultural resources, significantly decrease roadway closure duration, and provide safer bridges with longer service lives. To continue to attain these benefits through ABC, design and construction techniques should be updated continuously to reflect advances in technology and insight gained through constructing ABC projects.

UTILIZING ABC TECHNIQUES FOR AN EMERGENCY BRIDGE REPAIR ON THE GARDEN STATE PARKWAY

Mohammad Qasim, P.E., Bridge Engineer, HNTB Corporation, (973) 434-3157, mqasim@hntb.com
Todd Batchelor, Senior Project Engineer, HNTB Corporation, (973) 434-3248, tbatchelor@hntb.com

ABSTRACT

Bridge No. 112.1NO is a three-span, simply supported, multi-stringer structure that carries the Garden State Parkway (Parkway) northbound outer roadway over Middletown-Lincroft Road. A backhoe carried on a flatbed trailer impacted the 36-foot long center span superstructure in November 2017, causing irreparable deformation of the east fascia and first interior stringers and damaging the adjacent diaphragms as shown in Figure 1. Following the temporary stabilization of the bridge by the on-call emergency services contractor, HNTB and the New Jersey Turnpike Authority (Authority) adapted Accelerated Bridge Construction (ABC) methods to rapidly replace the damaged superstructure in a single weekend.

Figure 1: Stringer Impact Damage

ABC SOLUTION NEED

The Parkway is one of the busiest toll roads in the country and conventional construction methods using long-term duration lane closures for the permanent work would significantly disrupt traffic. An ABC solution was selected to minimize interruption. The ABC work activities were scheduled in a 67-hour high intensity construction cycle (HICC) from 10 am Friday to 5 am the following Monday and required closure of two of three lanes on the Parkway outer roadway in addition to the underpassing local roadway. Due to the roadway's high traffic volume, the HICC was scheduled for April 2018 during a limited weekend timeframe to avoid the peak travel season summer shore traffic. Two prefabricated bridge units (PBUs), each comprised of two steel stringers and a reinforced concrete deck, were proposed to replace the damaged members as shown in Figure 2.

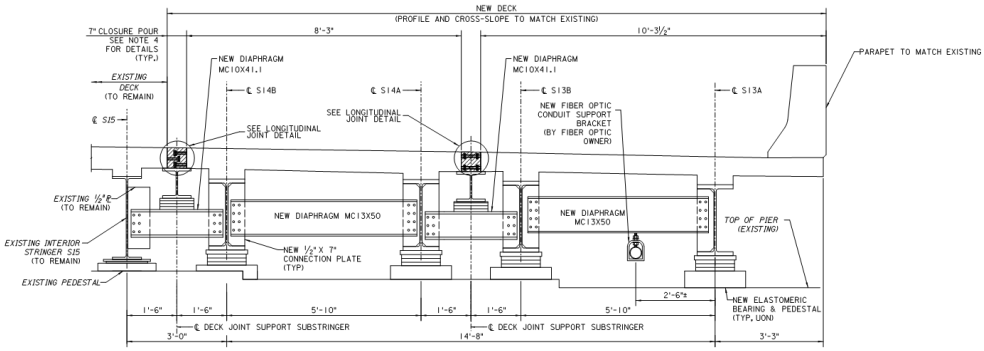

Figure 2: Proposed PBU Replacement Cross-Section

MAINTENANCE AND PROTECTION OF TRAFFIC

Bridge No. 1121NO is situated in the section of Parkway that is split into an outer (local)-express (inner) lane configuration for both northbound and southbound travel directions. The design of the project's maintenance and protection of traffic scheme included the installation of portable variable message signs at strategic locations to provide customers with advance notification of the upcoming work. The signs also served to direct traffic not exiting the northbound outer roadway south of the bridge to the inner roadway during construction. The ability to shift traffic from the outer to the inner roadway was advantageous and minimized customer impacts.

CONSTRUCTION SEQUENCING

The contractor performed advance work to maximize productivity during the HICC including the installation of four of the eight new elastomeric bearings. The contractor's construction sequence was as follows:

- Partial demolition of existing deck, stringers, bearings, and parapet and removal of debris
- Preparation of pier seats and installation of remaining bearings
- Installation of PBUs, sub-stringers, and intermediate diaphragms (See Figure 3)
- Installation of grout in longitudinal closure pour joints (See Figure 4), membrane waterproofing, and asphalt wearing surface

Cast-in-place parapet construction was performed within a closed shoulder behind temporary barrier subsequent to the weekend HICC. Deck joints areas were temporarily plated and paved with asphalt. Asphaltic plug joints were installed during a future maintenance contract.

Figure 3: PBU Erection

Figure 4: PBU Longitudinal Closure Pour Grouting

CONSTRUCTABILITY CONSIDERATIONS

Constructability issues were addressed during design to maximize contractor productivity in the limited working timeframe. The design philosophy emphasized time saving measures including the following:

- Designing advance work that could be performed by the contractor prior to the weekend HICC
- Detailing and material usage conducive to rapid construction
- Designing PBU details and dimensions to expedite contractor erection activities
- Performing a detailed investigation of existing structure geometry to prevent PBU fit issues

Advance Work

PBU stringers were located to avoid conflicts with the existing members where feasible, allowing the contractor to install several of the new bearings in advance of the weekend closure. The bearing masonry plates were set on anchor rod leveling nuts to permit rapid and accurate installation of the superstructure units and eliminate time-consuming concrete pedestal forming and curing. The areas below the masonry plates were packed with non-shrink grout.

Erection

The PBUs were limited in width to control weight and provide the contractor with greater flexibility for crane size and placement during erection. The parapet was constructed in place to reduce the fascia unit pick weight, improve handling during erection, and ensure accurate geometric tie in with the existing parapet in adjacent spans. Sub-stringers were installed beneath the longitudinal joints to act as a closure pour form, provide additional support for the grout, and alleviate potential future grout cracking.

Fit

The existing deck consisted of cast-in-place reinforced concrete overlaid with a thick variable depth asphalt wearing surface resulting from past roadway reprofiling. A coring program was implemented to determine the asphalt thickness and top of concrete deck profile/cross slopes. In conjunction with the coring program, a top of deck surface and appurtenant features survey was performed to accurately tie the new construction to existing and prevent fit issues.

LESSONS LEARNED

The sub-stringer detail was requested by the contractor, however installation proved to be difficult due to fit issues. Since the sub-stringer was not necessary given the designed joint reinforcement, the detail should be removed from future projects of a similar type without detrimental effects on bridge performance or service life.

CONCLUSIONS

The application of ABC techniques to an emergency bridge repair project on the Garden State Parkway proved to be tremendously successful for the New Jersey Turnpike Authority, continuing their tradition of providing excellent service. The contractor completed the repair work and opened the lanes twelve hours ahead of the anticipated schedule. As one of the busiest toll roadways in the Northeast, the use of conventional construction methods would have resulted in long-term lane closures and extensive delays for Authority customers traveling through the work zone. Instead of a construction period spanning multiple weeks, the bridge repairs were largely completed in a single weekend, limiting travel impacts and helping to ensure the safety of Authority customers, employees, and the project's contractor.

THE CAUSEWAY BRIDGE CONSTRUCTION, PAST & PRESENT

Hossein Ghara, PE, MBA, Volkert Inc., (225)288-1163, Hossein.ghara@volkert.com

The Lake Pontchartrain Causeway is a toll bridge which spans over Lake Pontchartrain from Causeway Boulevard in Metairie, Louisiana to Highway 190 at Mandeville, Louisiana. This toll facility is managed by the Greater New Orleans Expressway Commission (GNOEC) and has been listed since 1969 by the Guinness Book of Worlds Records as the World's longest bridge over water at 23.83 miles long. The Causeway Bridge consists of two parallel bridges designed and constructed in different periods of time. The original bridge is on the West, it opened in 1956 and carries traffic from North to South. The second bridge on the East, opened in 1969 and carries traffic in the opposite direction.

Palmer and Baker, Inc., designed the first bridge to exclusively consist of identical panels, caps and pilings. The 56' long and 33' wide spans were cast monolithically to allow for all pieces of the bridge to be fabricated offsite, minimizing cost and time required to construct such a large structure.

Despite the fact many engineers consider "Accelerated Bridge Construction" (ABC) as a new and innovative bridge engineering phenomenon, the design and construction technologies which was incorporated for this bridge in the 1950's is a testament to the fact ABC was being implemented in Louisiana long before it received its formal recognition and title.

The Louisiana Bridge Company (LBC), a joint venture between Brown and Root, Inc. of Houston, Texas and T.L. James Company of Ruston, Louisiana, implemented Palmer & Baker's design. LBC worked with Raymond Concrete Pile Company to construct a yard near the planned site. All pieces of the bridge were produced at this location. The Raymond Concrete Pile Company utilized their unique manufacturing technology to produce prestressed concrete cylinder piles which were capable of resisting corrosive conditions of the Lake's brackish water. A canal was dredged from the lake to the facility to accommodate loading materials on and off barges. pilings and Spans were constructed on the off-construction site plant. e.g. Historic American Engineering record (1)

The second bridge was designed by David Volkert & Associates in the Mid 1960's and it's construction began in 1967. This structure's typical span is made of 84' long and 33' wide with Precast Prestressed members. The GNOEC chose another joint venture consisting of Brown and Root, T.L. James and Raymond International (formerly the Raymond Concrete Pile Company) called Prestressed Concrete Products, Inc. to build the second bridge utilizing the same prefabrication techniques that had proven successful before. Prestressed Concrete Products, Inc. manufactured nearly all components of the second bridge at the plant and transported by barge to the construction site in the lake.

The Prestressed, Precast concrete bridge system built in the 1950's and subsequently in the 1960's display technology that symbolizes modern bridge construction techniques even though such construction techniques were not labeled as ABC.

Today, although both bridges are in reasonably sound structural condition, nearly 60 years of age and have endured harsh site conditions such as brackish water and high humidity, their roadway widths are insufficient for the current increased traffic volumes. Lack of shoulders which have contributed to the high rate of accidents prompted GNOEC to look for the most financially feasible solution to this problem. Several solutions were taken into consideration. Ideally, the best solution would have been to provide an outside shoulder the entire length of the causeway on both bridges. This solution was found to be financially infeasible due to their length. Other solutions were considered but eventually found to be ineffective. The end solution which was a subset of the first solution was to provide intermittent pull-off locations. The end goal became to build 12, 1008' foot long Safety Bays, six along the length of each bridge.

The Urgency to move forward with the design and construction of the safety bays within the available budget and with minimal interruption to the traffic demanded creativity in all phases of this project. The GNOEC was convinced that one of the vehicles to accelerate design and construction and yet to be able to minimize risk and control schedule and budget and ensure quality was to consider project delivery method through implementation of "Construction Manager at Risk" (CMAR) or otherwise known as "Construction Manager/General Contractor" (CM-GC).

Why CMAR? Because CMAR is most effective when collaboration and cost control is desired, concurrent execution of design and construction is preferred for complex projects with tight time frames and when owner, designer and contractor have mutual project goals. Other attributes of this method of project delivery are, identification of risk by owner, minimization of risks of construction and design disputes.

Commonly in States, CMAR statutes require that the owner hire a design engineer and contractor through independent contracts which in turn work together to maximize the efficiency of the design. To that end, request for qualifications for design was submitted by GNOEC and Volkert Inc. was selected. GNOEC also selected Boh Bros. as it's pre-construction contractor. Huval & Associated of Lafayette, Louisiana was selected as project manager for the owner and CEC Inc. of Lafayette, the Independent Cost Estimator.

Boh collaborated with Volkert and the GNOEC on constructability, schedule and budget to help guide the design. In CMAR, intensive owner participation is crucial. Weekly meetings were held with the stakeholders and with the owner present and participating in majority of important decisions.

Boh states that "transparency is paramount when addressing and resolving risk. One concern on any project is pile length variability and whether the piles can be driven to grade." "In low bid world, the contractor assumes the risk of Pile Cutoff and includes its estimated cost in his bid however, if the same cost is presented to the owner as a Risk Item in the case of CMAR, the owner will pay for the actual number of piles that will require cutting off. e.g., Boh Picture (2)

In this project, CMAR process has allowed for a more expedited design and planning and facilitated a construction schedule that minimally impacted traffic through collaboration with the designer.

Advanced Work Packages are among the benefits that is gained by utilizing CMAR. In this project, an advanced test pile program was developed to facilitate establishing pile depths and estimated quantities. This process enabled purchasing majority the required piles prior to an executed Guaranteed Maximum Price (GMP). In CMAR, the advance work packages can be structured so that the owner can have full ownership of the purchased materials regardless of the contractor's ability to negotiate an agreeable GMP Contract.

The contractor's choice for the Safety Bays construction method had many similarities with the methods used for the original construction of both bridges. The decision was made to fabricate the bridge sections off-site and in modular fashion. They barge them to the construction site from the contractor's off-site location. Piles and Caps have been pre-cast and Accelerated Bridge Construction (ABC) has enabled pile driving and pile cap connection to be accomplished exclusively form the barge which has circumvented lane closures. Minimizing lane closures and to allow free flow of traffic was among the owners most significant requirements and ABC has been able to deliver this requirement to the maximum extent possible.

The production in the off-site casting yard is an elaborate process and critical on multiple levels. For example, safe guarding the precast, prestressed members against exceeding their designed stress limits particularly subsequent to the casting of the deck and barrier on the girders is essential. Same also applies to the lifting of the span units by the SPMT during their transportation on the barge and finally to the construction site. Lifting of the units by the SPMT takes place at bearing points under the completed spans at different points along their length than their final bearing locations for which the girders have been designed. Careful analysis is required to ensure compliance with the design specifications during lifting and barge transportation. Once several units are placed on the barge, they are transported to the construction site where they are lifted in place by the SPMT and placed on their permanent locations.

The Safety Bay project team is convinced that the combination of ABC methods of bridge construction with the application of CMAR process has expedited the delivery of this project, saved construction time, minimized interruption of traffic, meeting the budget and has minimized risk for both the owner and the contractor.

SOURCES:

(1) Lake Pontchartrain Causeway & Southern Toll Plaza Bridge, Canopy. Historic American Engineering Record, National Park Services, U.S. Department of the Interior, 1849 C Street NW, Washington, D.C. 20240-0001

(2) Boh Picture, Vol. 47, Number 1/Spring-Summer 2019 A Publication of Boh Bros. Construction Co., LLC "Driving for Safety" CMAR Process Speeds Improvements to the Causeway Bridge.

AN INTEGRATED ERECTING TECHNIQUE FOR FULLY PRECAST BRIDGES

Wang Changjiang, Professoriate Senior Engineer, Zhejiang Provincial Transportation Planning and Design Institute Co., Ltd. (ZJIC),
Chen Xiangyang, Professoriate Senior Engineer, ZJIC,
Li Lei, Senior Engineer, ZJIC, (86)13867493662, 160711446@qq.com

ABSTRACT

An integrated erecting technique for fully precast bridges was developed in which precast components are transported via the installed beams. Additionally, beams, bent caps, and columns are installed using the same erecting machine (EM). To increase efficiency further, a new integrated EM with two working faces was also developed. The precast column and bent cap are installed on the front working face, while the precast beam slab is installed on the rear working face. This EM can erect a single-span bridge in four business days. This system requires no temporary construction roads. All the installation processes are completed using the integrated EM. The land bridge of Main Passageway of Ningbo–Zhoushan Port (NZP) is 5.48km long, with high environmental requirements, and no access road for precast components. The new technology has been successfully applied on this project.

KEYWORDS:

fully precast bridges; integrated erecting technique; double working face

INTRODUCTION

Herein, a fully precast bridge refers to one whose piers (composed of columns and bent caps) and upper structure are constructed with precast components but whose foundation is not. In order to improve the construction quality, accelerate the construction speed, full precasting and assembly schemes for bridge piers (including bent caps) and beam slabs have been developed vigorously. The precasting of bridge components in prefabrication plants is relatively immune to disruption and allows for high precision. Additionally, because the upper and lower structures are manufactured concurrently in a streamlined process in prefabrication facilities, the construction period can be controlled. Moreover, on-site assembly of precast bridge components is rapid and can reduce the surrounding environmental and traffic impacts.

In 1979, a construction scheme with fully precast piers (including bent caps) and beam slabs was used to construct the Linn Cove Viaduct in the U.S. state of North Carolina [Muller and Barker (1)]. The grout-sleeve connection scheme used to construct the Edison Bridge in the U.S. state of Florida in 1993 [Culmo (2)] addressed the difficulty in connecting ordinary rebars during rapid construction. This marked a new stage of rapid construction of fully prefabricated land bridges. In the 1990s, China began to investigate full precasting and assembly processes for land structures [Sun et al. (3)]. In 2015, the Jiamin Viaduct [Zhang (4)] was built through a comprehensive full precasting and assembly process.

Conventional erecting techniques for precast piers and beam slabs suffer from considerable limitations. First, large transportation machinery and hoisting equipment, whose operation requires strict road-system conditions, are needed to transport and erect the precast components. For example, thanks to the

favorable urban transportation conditions, all the components of the Jiamin Viaduct were transported by large transportation vehicles to the construction site and installed using a 250-t crawler crane during nighttime road closures. Table1 summarizes the road conditions required for a 250-t crawler crane. These are difficult to satisfy in mountainous, sea, or environmental-conservation areas, in which using crawler cranes will incur relatively high economic, environmental, and social costs.

Table1. Technical transportation requirements for a 250-t crawler crane.

Vehicle type	Bearing strength of road [t/m^2]	Road width [m]	Turning radius [m]
250-t crawler crane	>20	>10	>12

Additionally, operators must be extremely skilled to operate crawler cranes or truck-mounted cranes to lift components at construction sites. Lifting large-tonnage components often requires two cranes [the Jiamin Viaduct was erected using a main 250-t crane and an auxiliary 100-t crane [Zhang (4)] and involves high construction risks. Moreover, crawler cranes are affected considerably by environmental factors. Consequently, it is relatively difficult to position a component precisely with a crawler crane.

To address the aforementioned difficulties, an integrated erecting machine (EM) for beam slabs, bent caps, and columns was developed in the present study, along with an integrated erecting technique for fully precast bridges based on the new EM. This technique (i) integrates the transportation, erection, and construction methods for the upper and lower structures, (ii) increases the level of automated construction, and (iii) reduces construction difficulties.

INTEGRATED ERECTING TECHNIQUE

Overall Structure of Integrated EM

The key integrated EM design principles are as follows. Precast bridge components are transported via the T-beams that have already been constructed. An EM is then used to erect the precast components of the upper and lower structures on site. Thus, the transportation, erection, and construction of the upper and lower structures are integrated.

A conventional EM has only one working face, and it takes 4.5d to install the precast components of the upper and lower structures of one bridge span on one working face (see Table2). No other tasks can be performed during the grouting and curing of the column and bent cap.

Table2. Efficiency analysis of integrated single-working-face erecting machine (EM).

No.	Main process	Effective construction time [d]	Climate influence coefficient (CIC)	Actual construction time [d]
1	Preparation	0.1	1.0	0.1
2	Span-crossing of EM	0.4	1.2	0.48
3	Installation of column	0.6	1.2	0.72
4	Grouting and curing of column	1.0	1.0	1.0
5	Installation of bent cap	0.4	1.2	0.48
6	Grouting and curing of bent cap beam	1.0	1.0	1.0
7	Installation of T-beam	0.6	1.2	0.72
Total		4.1		4.5

To improve efficiency and make better use of the time during the grouting and curing of the column and bent cap, an integrated double-working-face EM approach was designed. The column and bent cap are erected on the front working face, while the beam slab is erected on the rear working face. To implement this approach, two types of EMs were designed based on front-pivot EMs. One type of EM is a tower-crane integrated EM, which is similar to a cantilever crane; in this EM, the front working face is supported by a cable-stayed structure. The other type of EM is a front auxiliary support leg (FASL) integrated EM. This EM is supported by its front auxiliary support legs on the sides of the pile foundation. Figure1 shows the two EM structures.

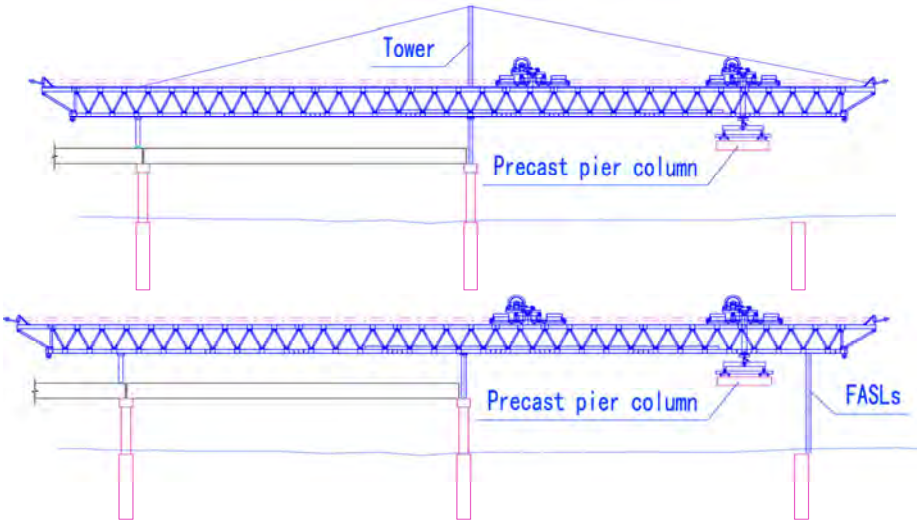

Figure1. General integrated EM structures: tower-crane integrated EM (top); front auxiliary support leg (FASL) integrated EM (bottom).

The tower-crane integrated EM can be used in a wide range of conditions, but its front working face is not particularly stiff and its operating height exceeds 12m. Instead, to reduce the operating risks and meet the span-passing requirements, the FASL integrated EM was used in application. Nevertheless, the tower-crane integrated EM is highly advantageous and merits further investigation and popularization in areas with significant topographic variations (e.g., mountainous, hilly, and sea areas) or where the front-section support is inadequate. Figure2 shows the structure of the FASL integrated EM.

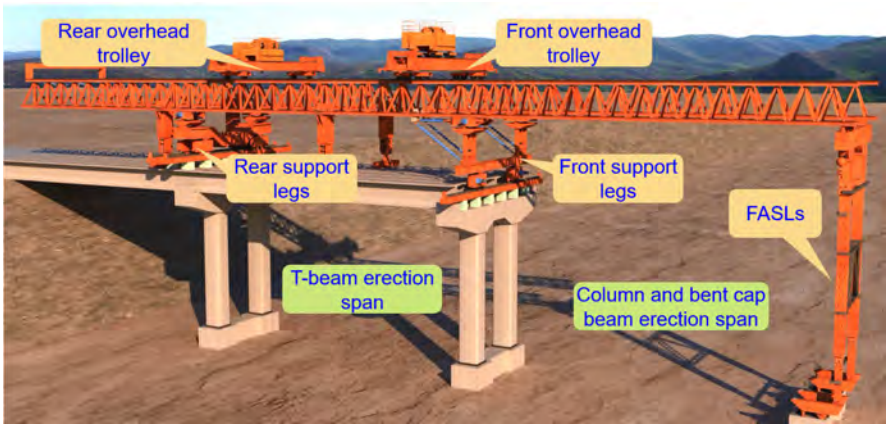

Figure2. Overall structure of FASL integrated EM.

The FASLs of the integrated EM used in practice are supported by a strut-and-tie system on the sides of the constructed bearing platform. The FASLs of this EM have an adjustable length of 12–27m and can bear loads of up to 170t.

Construction Procedure Using Integrated EM

The erection procedure using the integrated EM is shown in Figure3 and is described below.

1) The integrated EM installs pier columns, bent caps, and beams span by span.

2) A precast pier column is transported to beneath the EM via the erected beam. The front and rear overhead trolleys are then used to transport the precast pier column horizontally to the front working face. The front and rear overhead trolleys are then coordinated to rotate the pier column by 90° on the vertical plane. After the alignment between the pier column and the bearing platform has been determined to meet the precision requirements, the pier column is fixed and grouted.

3) A precast bent cap is transported to beneath the EM via the erected beams. The front overhead trolley is then used to transport the precast bent cap horizontally to the front working face and then install it after rotating it by 90° on the horizontal plane. After the precision requirements have been met, the bent cap is fixed and grouted.

4) While the grout in the bent cap is solidifying, a precast beam slab is transported to beneath the EM via the erected beams. The front and rear overhead trolleys are then used to transport the precast beam horizontally to the rear working face. After the precision requirements have been met, the beam is lowered onto the bent cap, thereby completing the installation of the beam.

5) After completing the installation of the pier column, bent cap, and beam of a span, the integrated EM moves to the next span and continues the installation process.

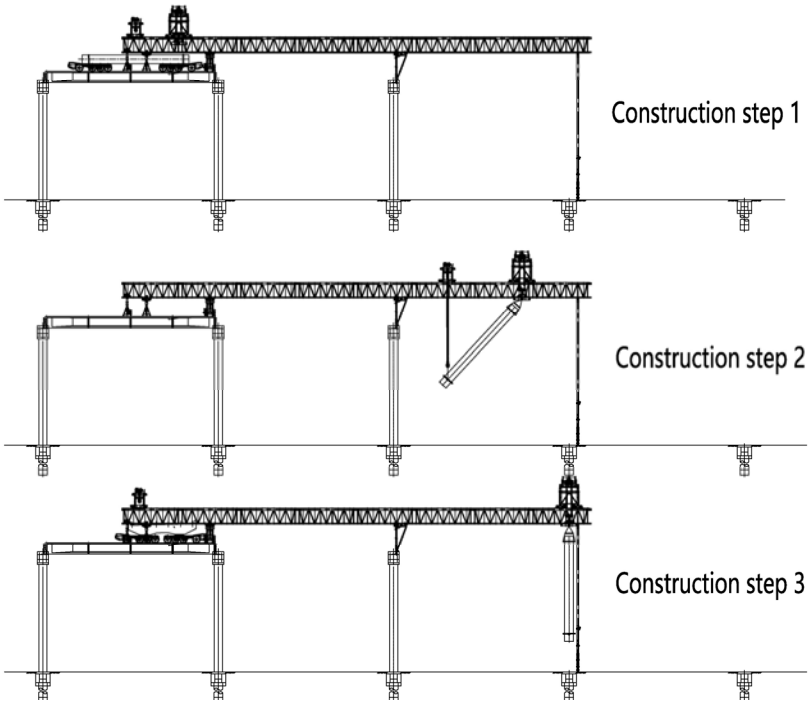

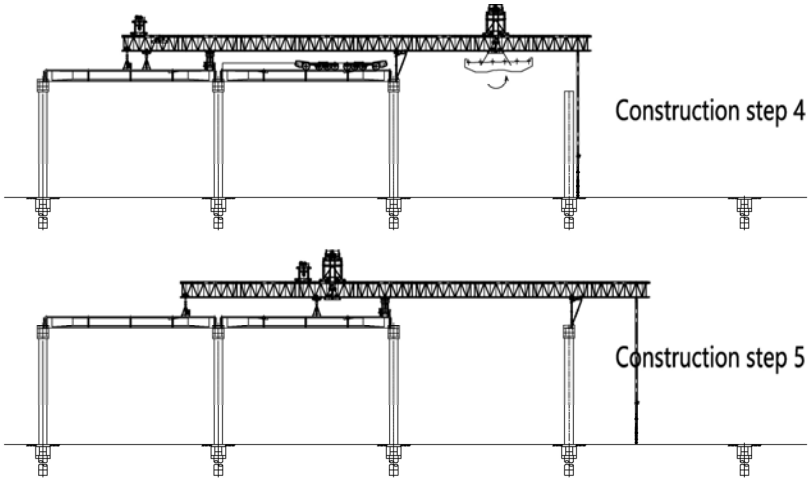

Figure3. Overall construction process with integrated EM.

Automation Technology for Integrated EM

The automatic control systems, such as wireless control system, video monitoring system, synchronous hydraulic system, FASL tilt alarm system, are installed in the integrated EM to maximize its operating efficiency. Supported by these automatic control systems, only six to eight personnel are required to complete all the tasks involved in on-site installation.

Efficiency Analysis

Installation of a single-span T-beam bridge (including columns and bent caps) using the integrated erecting technique requires 3.78d. The integrated EM completes the erection of one bridge span in 0.72d less than does a single-working-face EM. Additionally, using an EM-fixing platform increases the component positioning efficiency and accuracy considerably. Table 3 summarizes the efficiency analysis.

Table3. Efficiency analysis of integrated installation and construction (single span).

No.	Main process	Effective construction time [d]	CIC	Actual construction time [d]
1	Preparation	0.1	1.0	0.1
2	Span-crossing of EM	0.4	1.2	0.48
3	Installation of column	0.6	1.2	0.72
4	Grouting and curing of column	1.0	1.0	1.0
5	Installation of bent cap	0.4	1.2	0.48
6	Grouting and curing of bent cap	1.0	1.0	1.0
7	Installation of T-beam requires 0.6d and can be completed during grouting and curing of column.			
Total		3.5	——	3.78

APPLICATION OF INTEGRATED ERECTING TECHNIQUE IN PROJECT OF MAIN PASSAGEWAY OF NINGBO–ZHOUSHAN PORT

General Information on the Main Passageway of Ningbo-Zhoushan Port Project

Situated in the northeastern Zhoushan Archipelago area, the main passageway of the Ningbo–Zhoushan Port (NZP) connects the largest and second-largest islands of the archipelago, namely Zhoushan and

Daishan Islands, respectively. The design speed on the main passageway of NZP is 100km/h, the standard width of the subgrade of the main passageway of NZP is 26.0m, and the total length of the project is 25.659km, of which 16.734km is over the sea and 8.925km is on land. The total length of the viaducts on land is 5.481km. The land segment of the project traverses coastal suburbs with many farm fields and mountain forests, where there are strict land-use and environmental protection requirements. Limited by its geographic location, the road conditions are poor in this area, with only one general road, namely the Yadong Road. Figure4 shows the geographic locations of the viaducts on land along the main passageway of NZP.

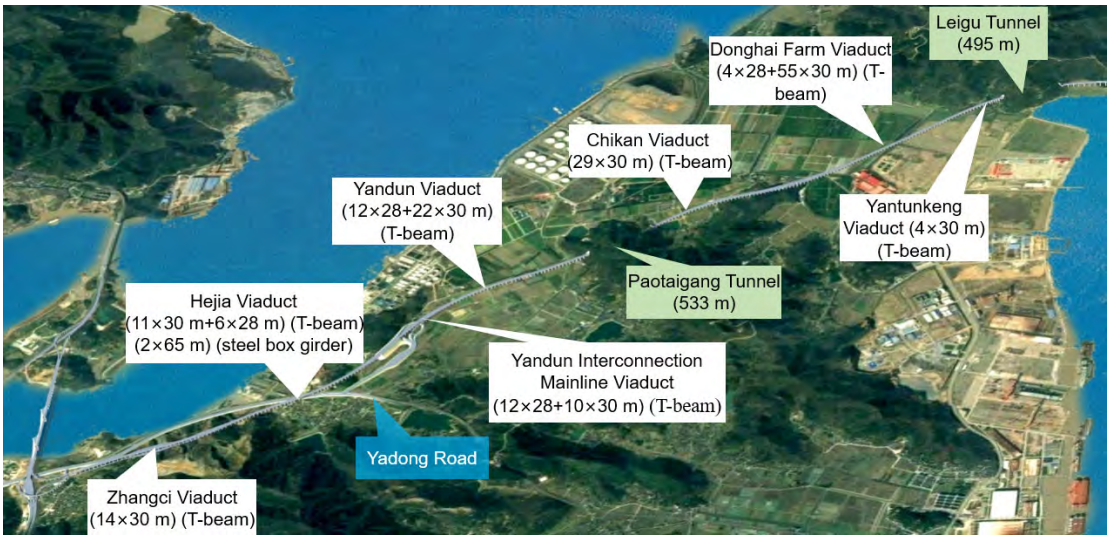

Figure4. Geographic locations of viaducts on land along main Passageway of Ningbo–Zhoushan port (NZP).

Thus, from the perspectives of structural durability, construction quality, and environmental protection, both the upper and lower structures of the main passageway of NZP were constructed by assembling fully precast concrete components. Except for the one over the Yadong Road, each viaduct on land consisted of an upper 358 standard-spans (30m/28m) (total for the two decks) T-beam structure and a lower structure constructed with precast columns and bent caps. Additionally, the pier components were connected by grout sleeves. In total, the main passageway of NZP was constructed with 2,148 precast T-beams and 320 precast piers. Figure5 shows the standard section of the viaducts, and Table4 gives the specifications of the pier structure.

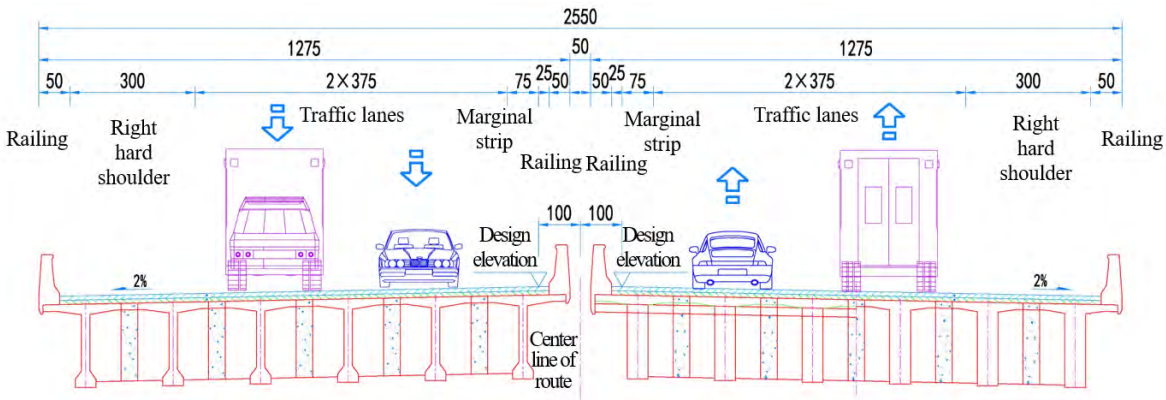

Figure5. Standard section of T-beam.

Table4. Specifications of pier structure.

Pier height [m]	Bent-cap width [m]	Column side length [m]	Pile diameter [m]	Schematic
<10m	1.7/1.9	1.2	1.6	
10–20m	1.7/1.9	1.5	1.8	
20–25m	1.7/1.9	1.5	1.8	

The maximum height and maximum installed weight of a column are 20.1m and 117t, respectively. The weight of a bent cap is 84t and that of a single T-beam is approximately 78t. Table5 summarizes the proportions of columns of various heights.

Table5. Height statistics of precast columns.

Pier height h [m]	h ≤ 10	10 < h ≤ 15	15 < h ≤ 18	h ≥ 18	Total
Quantity	232	256	118	34	640
Proportion	36.25%	40%	18.44%	5.3%	100%

Construction Planning

Three integrated EMs were used to construct the entire main passageway of NZP. Figure6 shows the erecting scheme with the EMs.

1) EMs1 and 2 were used to install viaducts, one on the left-deck side and the other on the right-deck side, from the end of the Yandun Viaduct. Successively, the Yandun Viaduct, the Yandun Interconnection Mainline Viaduct, the Hejia Viaduct, and the Zhangci Viaduct were installed. Afterwards, these two EMs were transported and used to install the Chikan Viaduct. A total of 232 viaduct spans were installed using EMs1 and 2.

2) EM3 was used in single-deck installation of viaducts from the left deck of piers41–43 of beam-lifting station2 for the Donghai Farm Viaduct. After the Yantunkeng Viaduct was installed, EM3 was used to install the left deck of the Donghai Farm Viaduct. Finally, EM3 was used to install the right deck of the Donghai Farm Viaduct. A total of 125 viaduct spans were installed using EM3.

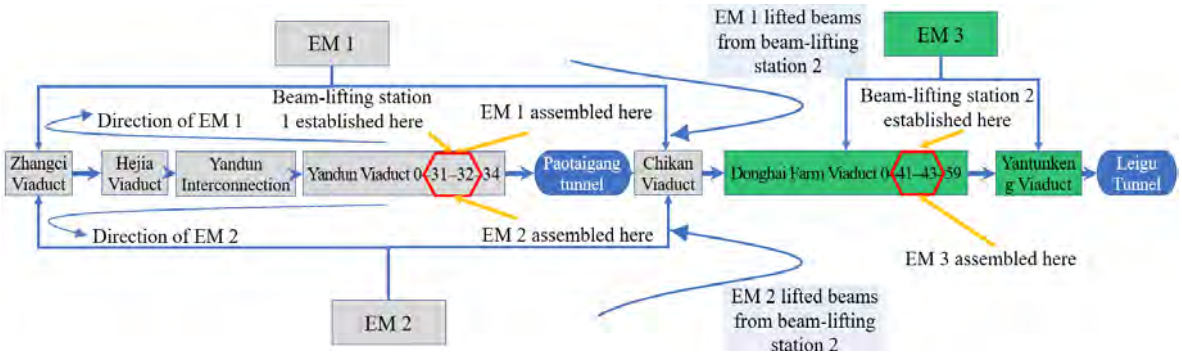

Figure6. Overall planning of construction with integrated EMs.

Beam-lifting station1 was established in the Yandun suburb near the village roads. Beam-lifting station2 was established in the sparsely populated planned Dinghai Industrial Park Zone. Columns, bent caps, and T-beams were lifted by a girder-lifting gantry crane to the transportation vehicles on the viaduct and were subsequently transported to the construction site. It took approximately 480 d to complete the installation of the viaduct spans.

Results of Applying Integrated Erecting Technique

Construction Efficiency

The integrated erection of the main passageway of NZP began in late June 2018. On average, it took 4 days to complete the erection of the upper and lower structures of one viaduct span. This was consistent with the expected efficiency. The erection of all the viaducts on land was expected to be completed by the end of 2019.

Environmental Protection

The construction road requirements of the integrated erecting technique are relatively less demanding. Comparing the temporary construction roads required for pile foundation construction and the high-class construction roads required by crawler cranes for hoisting shows that the integrated erecting technique saved a construction road area of approximately 27,000m^2 for the entire main passageway of NZP project. Considering the costs for foundation treatment, temporary land acquisition, land rehabilitation, and compensation, using the integrated erecting technique saved approximately CNY 20 million (approximately USD 2.83 million) of investment.

Impacts on Local Traffic Conditions

The impacts of the integrated erecting technique on the traffic conditions in the surrounding area were minimized. The two beam-lifting stations were established in the Yandun suburb near the village roads and the sparsely populated planned Dinghai Industrial Park Zone, respectively. Components were transported on the erected viaducts, and assembling the EMs basically required none of the valuable local transportation resources.

EXTENSION OF AND THOUGHTS ON THE INTEGRATED ERECTING TECHNIQUE

Single-EM, Double-deck Erecting Technique

Based on the integrated erecting technique developed in this study, one EM can be used to erect a double-deck viaduct by transverse shifting. The main construction control procedure is as follows, and Table6 summarizes the efficiency of the single-EM, double-deck erecting technique.

1) After the column of the left deck of the viaduct on the front working face has been installed, the EM is shifted to the right-deck side of the viaduct and used to install the column of the right deck while the column of the left deck is curing.

2) While the column of the right deck is curing, the EM is used to install the T-beam of the right deck and subsequently the bent cap of the right deck.

3) The EM is shifted to the left-deck side and used to install the bent cap of the left deck and subsequently the T-beam of the left deck while the bent cap is curing.

Table6. Efficiency analysis of integrated construction (erection of one span of each of the left and right decks).

No.	Main process	Effective construction time [d]	CIC	Actual construction time [d]
1	Preparation	0.1	1.0	0.1
2	Span-passing of EM	0.4	1.2	0.48
3	Installation of column of left deck	0.6	1.2	0.72
4	Shifting of EM to right-deck side	0.2	1.2	0.24
5	Installation of column of right deck	0.6	1.2	0.72
6	Grouting and curing of column of right deck	1.0	1.2	1.2
7	Installation of bent cap of right deck	0.4	1.2	0.48
8	Installation of T-beam of right deck requires 0.6d and can be completed during grouting and curing of column of right deck.			
9	Shifting of EM to left-deck side	0.2	1.2	0.24
10	Installation of bent cap of left deck	0.4	1.2	0.48
11	Grouting and curing of bent cap of left deck	1.0	1.0	1.0
12	Installation of T-beam of left deck requires 0.6d and can be completed during grouting and curing of column of left deck.			
Total		4.9	——	5.66

If three EMs are similarly used, the single-EM, double-deck erecting technique can save approximately 120d of construction time compared to the single-EM, single-deck erecting technique (i.e., the erection of the control line takes approximately 360d) on the main passageway of NZP project. However, the single-EM, double-deck erecting technique requires the EM to be shifted twice between the left and right decks during the erection process. Because it was the first time that integrated erecting was implemented, from a reliability perspective, the single-EM, double-deck erecting technique was only used to erect one viaduct span in the supporting project.

Erection of High-pier Viaducts

The EM investigated in this study performs best when the T-beam, bent cap, and column are similar in weight. A column length slightly shorter than the beam length is conducive to rotating and installing the column. For high-pier viaducts, considering the FASL stability, it is necessary to install the columns segment by segment and increase their stability. Consequently, appealing options are (i) tower-crane integrated EMs without FASLs or (ii) integrated EMs with a displacement compensation system.

Limitations in Streamlined Construction

Installation and construction with crawler cranes is relatively more flexible. In that process, each column is installed followed by each bent cap and each T-beam. If problems occur at a pier construction site, then it is possible to continue construction at other sites. In comparison, limited by the overall shifting capacity of the EM, the integrated erecting technique can only construct one pier after another. For a double-deck viaduct, if an accident occurs at a certain pier site, then components can still be transported via the other deck. However, if a problem occurs at the construction site of a single-deck viaduct or if problems occur on both decks of a double-deck viaduct, then an additional beam-lifting station must be established to continue the construction process. In follow-up research on improving the integrated erecting technique

developed in this study, a collapsible technology and a more powerful self-moving technology could be introduced to allow the EM to move more flexibly.

CONCLUSIONS

In this article, an integrated erecting technique for fully precast bridges is introduced. For the first time in China, this technique enabled one-step, construction-road-free installation of the upper and lower structures of viaducts on land. Aided by an automated information system, this new technique is easy to implement and has high positioning efficiency and, overall, high construction efficiency. Additionally, this technique does not require construction roads and has insignificant impacts on the surrounding traffic and environment. This green, industrialized construction technique can be popularized in areas where sea bridges or urban highways are required, as well as in mountainous and environmentally sensitive areas.

ACKNOWLEDGMENTS

The supporting project described in this study (the main passageway of NZP) received investment from Zhejiang Zhoushan Beixiang Datongdao Co., Ltd. The relevant construction work was the responsibility of Zhejiang Construction Group, Ltd. The EMs were manufactured by NRS Jiangsu Machinery and Heavy Industry Co., Ltd. The authors thank technical experts from Zhengzhou New Dafang Heavy Industry Science and Technology Co., Ltd. and Wenzhou Cooperative Construction Road and Bridge Equipment Co., Ltd. for their advice on the EM design.

NOTATION

ZJIC is the Zhejiang Provincial Transportation Planning and Design Institute Co., Ltd.

EM is the erecting machine

NZP is the Ningbo–Zhoushan Port

FASL is the front auxiliary support leg

CIC is the Climate influence coefficient

REFERENCES

1. Jean M. Muller, James M. Barker. (1985) Design and Construction of Linn Cove Viaduct. PCI Journal September-October 1985: 38–53.

2. Michael P. Culmo. (2009) Connection Detail for Prefabricated Bridge Elements and Systems. FHWA-IF-09-010: Chaper3 17–18.

3. Sun Zhisong, Xu Haining, Yu Zhangkuan, et al. (2019) Comparison & Selection of Prefabricated Assembled Pier Connection Structures of West Qufu Bridge in Weihai. China Municipal Engineering (203): 80–83.

4. Zhang He. (2016) Field Installation & Positioning Technique of Prefabricated Column in Shanghai Jiamin Viaduct Project. China Municipal Engineering (186): 59–61.

ISOLATED BRIDGE ABUTMENTS FOR ACCELERATED BRIDGE CONSTRUCTION

Mohammad Saifuzzaman, Parsons Inc., (778) 372-3963, Mohammad.Saifuzzaman@parsons.com and
Matthias Schueller, Parsons Inc., (604) 438-5300, Matthias.Schueller@parsons.com

Figure 1: Nisutlin Bay Bridge, Concept 2019 (Ref. M. Schueller)

ABSTRACT

This paper discusses isolated bridge abutments and how this modern design concept successfully contributes to the Accelerated Bridge Construction (ABC). In recent years, the isolated abutment type has been developed, primarily to improve seismic responses of the bridges. The abutment type is based on a simple idea to provide an answer to situations where construction time, seismic design, and soft soils govern. This paper is addressing bridge designers, owners, and the construction industry to promote advancement in the modern abutment design with the goal to further improve ABC projects.

INTRODUCTION

Today, the ABC techniques, using Prefabricated Bridge Elements and Systems (PBES), are successfully driving the design and construction of many small to large-sized bridges. An increasing number of owners are considering ABC on their projects, mainly to minimize local traffic impacts during construction. Many owners are willing to pay a premium for ABC because the economic benefits outweigh extra costs resulting from short construction periods. The proven concept of isolated bridge abutments in conjunction with a fully isolated substructure has been envisioned for the new Nisutlin Bay Bridge, near Teslin in the Yukon, Canada (Figure 1). In conjunction with ABC, isolated abutments allow to reduce construction time without increasing costs. This is most important for cold temperature regions where weather significantly impacts bridge construction. A comparison of three different abutment solutions shows that even cost reductions are possible when using the isolated abutment type.

ISOLATED BRIDGE ABUTMENTS

Abutments are essential components of any bridge structure which provide a smooth transition from the superstructure to the approaches. Depending on design philosophy, they influence construction and maintenance costs as well as structural behavior of the bridge. Common types such as integral, semi-integral and non-integral (conventional) abutments, are often challenged in difficult geometric conditions (e.g. highly skewed situations) or in seismic regions with soft and/or liquefiable soils. On the contrary, the isolated abutment type comprises of a traditional pier in front of a Mechanically Stabilized Earth (MSE) wall to support the superstructure and a "jump span", which is an exposed concrete approach slab (1).

Since the concept of an isolated abutment is comparable with a free-standing pier, the superstructure can be erected independently from other time-consuming activities such as construction of the approaches, retaining walls, and backfilling. This independence enables parallel working conditions and reduces construction risks, especially when multiple contractors are responsible for construction activities along the critical path. Further, isolated abutments have a much smaller stiffness and resistance in the horizontal direction when compared with the usually preferred integral abutments. In a seismic event this structural flexibility is a great advantage to control seismic accelerations and consequently, substructure demands. The seismic isolators improve damping of the superstructure by assuring elastic response of the substructure in seismic events, but they require large displacements of the superstructure, Priestley et al. (2). The isolated abutment provides the required displacement capacity without using costly expansion joints with fuse boxes requiring maintenance and early replacement. Instead, the necessary longitudinal movement is absorbed by the jump span (approach slab) which is supported by a buried pre-cast sleeper slab. The seating area of the sleeper slab is shaped such that any horizontal movement can be accommodated without violating serviceability and seismic performance criteria. Sketches showing a conventional abutment type (Figure 2), an integral abutment type (Figure 3), and the isolated abutment type with the jump span (Figure 4) are presented below.

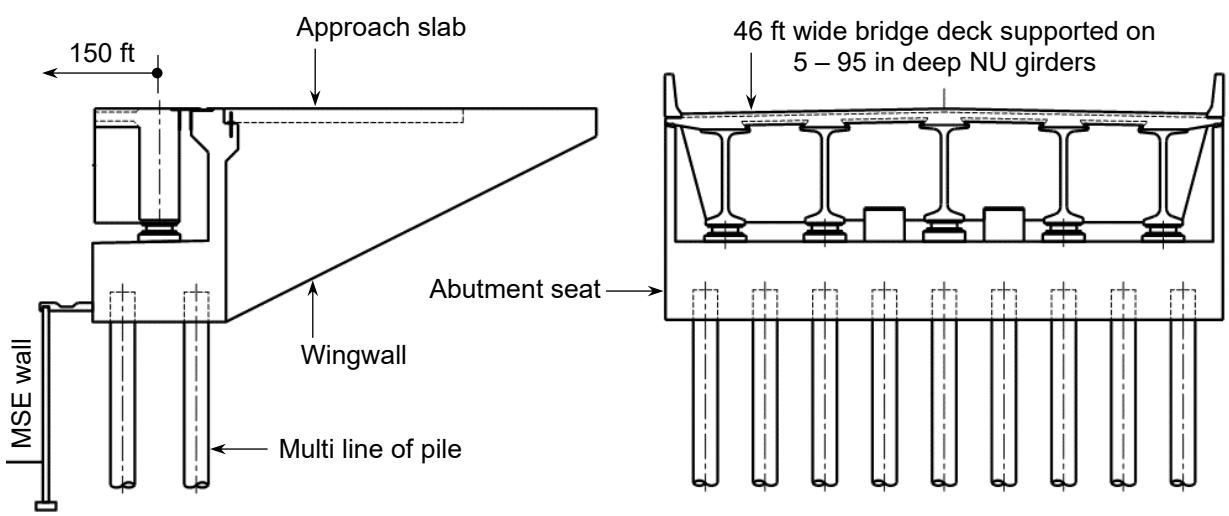

Figure 2: Conventional abutment with bearings, shear keys, and approach slabs (Type A)

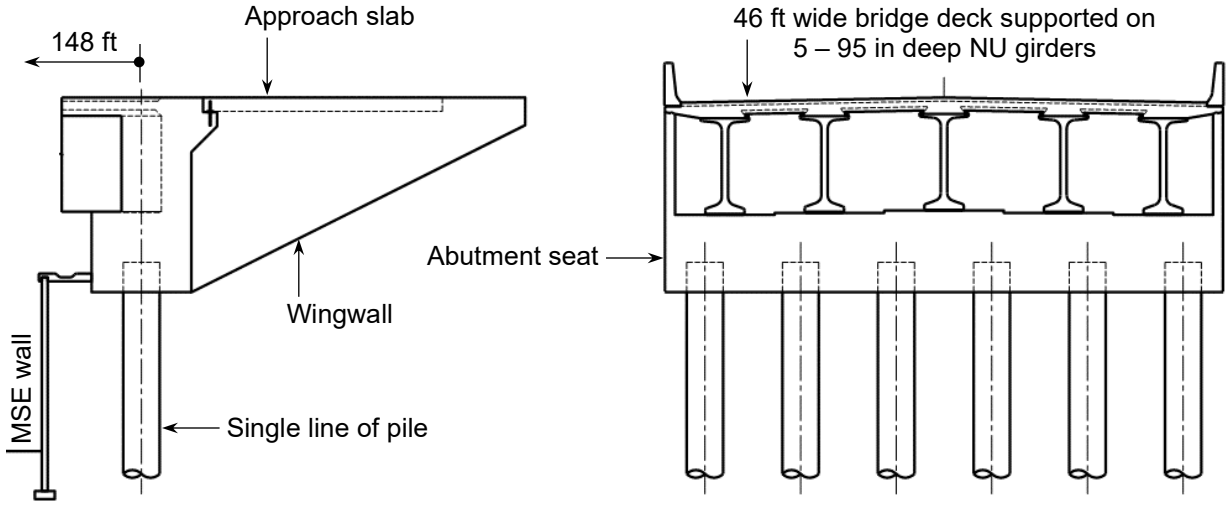

Figure 3: Integral abutment without bearings and with approach slabs (Type B)

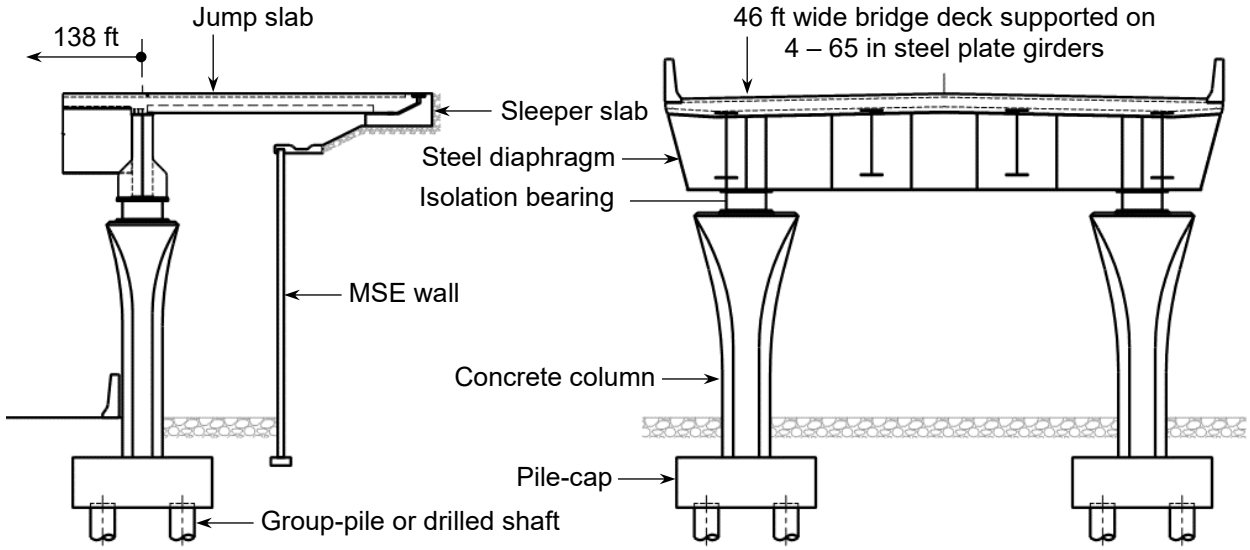

Figure 4: Isolated abutment with isolation bearings and jump slabs (Type C)

COMPARISON OF THREE ABUTMENT TYPES

The isolated abutment type has been investigated from a designer and contractor's perspective and compared to the conventional and integral abutment types. A single span two-lane overpass is used as a reference structure representing a typical ABC project. The effective span of the overpass is around 150 ft for the conventional, 148 ft for the integral, and 138 ft for the isolated abutment types to maintain a 131 ft clear width for the clearance envelope below. The width of the overpass is 46 ft including two traffic lanes, shoulders and barriers. Vertical clearance for the underpass is assumed to be 20 ft. For both conventional and integral abutments, a 20-ft long approach slab is proposed. For the isolated abutment, the approach slab is replaced with the jump span. The jump span is supported by a sleeper slab at the approach end.

The sleeper slab is designed to temporarily “kick-off” the jump span during extreme seismic events. After the earthquake the self-centering isolation bearings will allow the jump slab to fall back into its service position to permit immediate traffic flow as prescribed by modern seismic performance criteria. Figure 4 shows the details of the “kick-off” mechanism between the jump slab and sleeper slab. Kick-off position of the jump span is shown in gray.

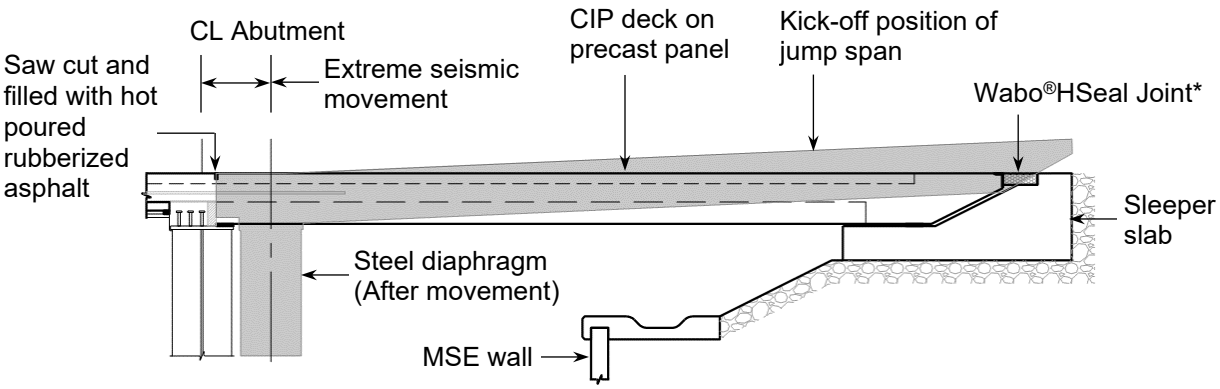

*Wabo®HSeal is a pre-compressed elastomeric coated expansion joint system designed to provide a permanent weather tight seal. Primarily used in horizontal applications, the system is sealed in place with an epoxy, which allows it to accommodate horizontal (up to 4 in), vertical, and skew expansion joint movements. (Ref. Watson Bowman Acme Corp.)

Figure 5: Jump slab connection details for the isolated abutment

STRUCTURAL SYSTEMS

The presented three abutment types, forming the structural systems A, B, and C, were investigated considering seismic design requirements and pile foundations. The different systems are presented in Table 1. The superstructure of Type A is transversely restrained and longitudinally free to move (Figure 2), Type B is transversely and longitudinally restrained (Figure 3), while Type C is “floating” in both directions because of the use of isolation bearings (Figure 4).

Table 1: Definition of different structural systems

Structural Definition	Type
Conventional abutment with elastomeric bearings and with shear keys	A
Integral abutment without bearings and without shear keys	B
Isolated abutment with isolation bearings but without shear keys	C

SEISMIC PERFORMANCE CRITERIA

In accordance with the Canadian Highway Bridge Design Code (CHBDC), CAN/CSA S6-14, bridges are categorized as lifeline bridges, major-route bridges, and other bridges. For the purpose of this investigation, only the performance criteria for the lifeline and major-route bridges are considered. The “minimum performance levels” and corresponding “performance criteria” for these two bridge types are presented below in Tables 2, 3 and 4.

Table 2: Minimum performance levels for lifeline bridges and major-route bridges (as per CHBDC)

Event (Probability of Exceedance)	Lifeline bridges		Major-route bridges	
	Service	**Damage**	**Service**	**Damage**
475 Year (10%)	"Immediate"	"None"	"Immediate"	"Minimal"
975 Year (5%)	"Immediate"	"Minimal"	"Limited"	"Repairable"
2475 Year (2%)	"Limited"	"Repairable"	"Disruption"	"Extensive"

Table 3: Performance criteria for **Service** as indicated in Table 2 (as per CHBDC)

Service	Description
Immediate	Bridge shall be fully serviceable for normal traffic and repair work does not cause any service disruption.
Limited	Bridge shall be usable for emergency traffic and be "repairable" without requiring bridge closure. At least 50% of the lanes, but not less than one lane shall remain operational. If damaged, normal service shall be restored within the first month.
Disruption	The bridge shall be usable for restricted emergency traffic after inspection. The bridge shall be "repairable". Repairs to restore the bridge to full service might require bridge closures.

Table 4: Performance criteria for **Damage** as indicated in Table 2 (adopted from CHBDC)

Damage	Description
None	Bridge components remain elastic without any damage: Concrete compressive strains are not to exceed 0.0035 and the average concrete crack width remains within typical service levels. Displacements are limited to regular reoccurring movements. No repairs required.
Minimal	Bridge components remain essentially elastic with only minor damage permitted: Concrete compressive strains not to exceed 0.0040 and reinforcing steel strains not to exceed yield. Movements permitted if safety and traffic are not affected. No immediate repairs required.
Repairable	Some local inelastic behavior and moderate damage acceptable. Reinforcing steel tensile strains not to exceed 0.015. Movements permitted if safety and traffic are not affected. 90% of structural capacity preserved for aftershocks. Capacity fully restored after repairs.
Extensive	Inelastic behavior with extensive visible damage but reinforcing steel tensile strains below 0.050. Movements limited to allow passage of emergency traffic after inspection of bridge. 80% of structural capacity preserved for aftershocks. Capacity fully restored after repairs.

DESIGN SPECTRAL ACCELERATION

The seismic design acceleration was obtained from a spectral response analysis considering 5% damping. The horizontal seismic accelerations for Site Class E were determined for the periods of 0.2, 0.5, 1.0, 2.0, and 10.0 seconds following the 475-year, 975-year, and 2475-year seismic events as prescribed by the CHBDC. The vertical target spectrum was taken as two-thirds of the horizontal target spectrum. The horizontal design spectral accelerations and displacements are shown in Figure 6.

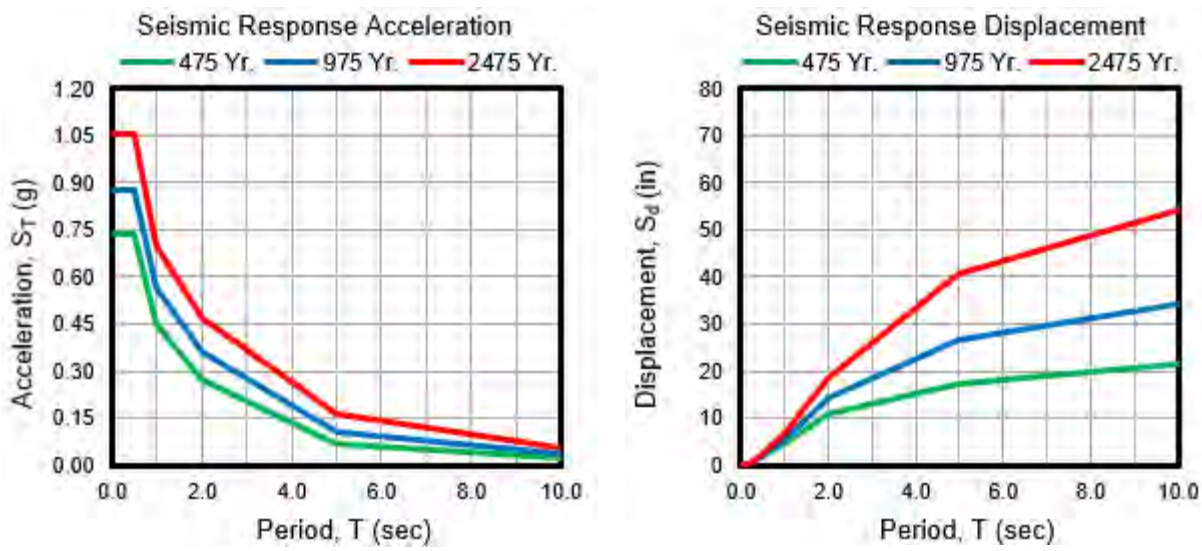

Figure 6: Seismic response acceleration (left) and displacement (right)

GEOTECHNICAL AND FOUNDATION DESIGN ASSUMPTIONS

Based on the soft soil parameters, an L-Pile analysis was conducted for 24-in and 36-in diameter pipe piles. The soil structure interaction (SSI) and the pile-head lateral load (V) versus lateral displacement (Δ) curves were produced and used to determine the equivalent point-of-fixity of fully restrained piles. The 24-in diameter pipe piles were used for the conventional and isolated abutments while the 36-in diameter pipe piles were used for the stiffer integral abutment. The piles were assumed to be filled with reinforced concrete in the upper 35 ft. The depth of till layer is around 230 ft below the ground; therefore, pile end-bearings were avoided. The assumed factored geotechnical axial capacities (skin friction only) of these piles are presented in Table 5 based on the non-seismic and seismic (2475 Yr.) resistance factors of 0.4 and 0.9 respectively. For the integral abutment type, a 5.30 ksi/in linear abutment spring (compression only) was used to restrain horizontal pile movements (longitudinal only).

Table 5: Assumed factored geotechnical axial pile capacity

Type	Pile Dia. (in)	Pile length (ft)	Non-seismic (kips)	Seismic (kips)
A	24	115	323	727
B	36	180	737	1658
C	24	115	323	727

ISOLATION BEARINGS

The application of isolation bearings reduces seismic design forces and thus foundation costs significantly for the structures in soft soil and high seismic zones. Two major categories of isolation bearings are commonly used: Lead Rubber Bearing (LRB) and Friction Pendulum Bearing (FPB).

Lead Rubber Bearing (LRB)

Lead rubber bearings are low-damping laminated rubber bearings with a lead plug inserted in the core of the device. The purpose of inserting the lead plug is to increase both the stiffness at relatively low horizontal force levels and the energy dissipation capacity in seismic events. The resulting force-displacement curve is a combination of the linear-elastic response of the rubber bearing and the elastic-plastic response of the confined lead plug. The stiffness of rubber is sensitive to temperature. It becomes softer in the summer and stiffer at cold temperatures in the winter. Therefore, the winter stiffness of the material governs the

horizontal seismic design forces for the piles. In contrast, the much lower summer stiffness governs the maximum superstructure displacements for the governing seismic design scenarios.

Friction Pendulum Bearing (FPB)

Friction pendulum bearings are based on the concept of a pendulum motion. The isolated structure is supported on an articulated Teflon-coated load element sliding on the inside of a spherical surface. Any horizontal movement therefore triggers a vertical uplift of the supported weight. If friction is neglected, the equation of motion of the system is similar to that of a pendulum with equal mass and length to the radius of curvature of the spherical surface. Usually, FPBs are categorized as a Single Pendulum Bearing (SPB) or a Triple Pendulum Bearing (TPB). TPBs are more efficient allowing larger displacements and are up to 60% more compact than SPBs. Figure 7 shows different operational positions of the TPBs while Figure 8 shows the principle of the TPB schematically when compared to a characteristic pendulum motion with one degree of freedom.

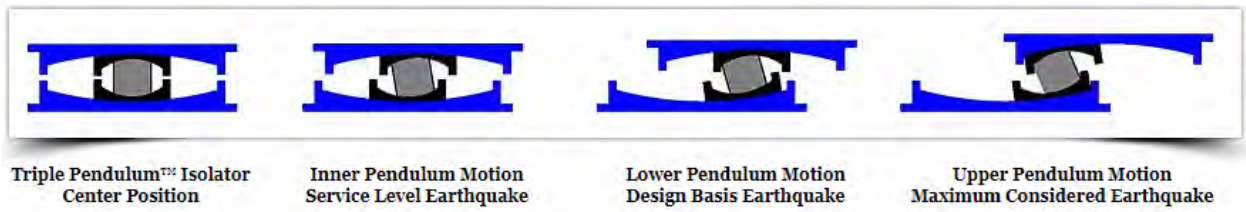

Figure 7: Different operational position of TPBs (Ref. Earthquake Protection System)

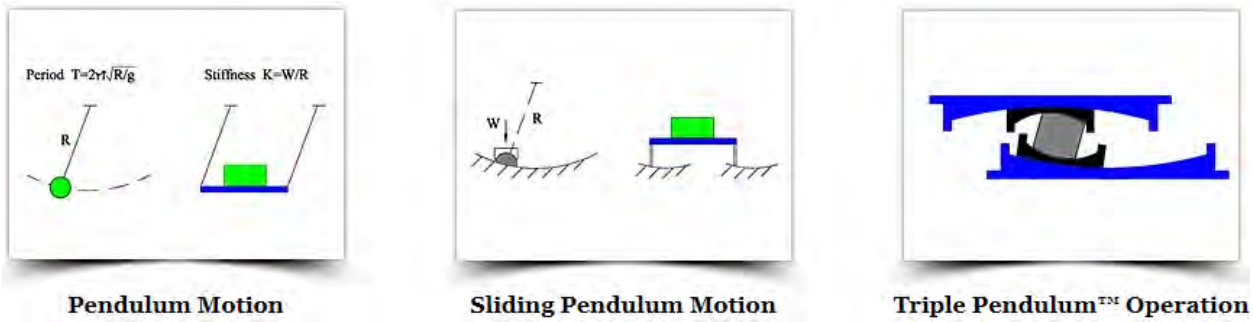

Figure 8: Principle of TPBs (Ref. Earthquake Protection System)

PREFABRICATED BRIDGE ELEMENTS

Because of their relevancy regarding ABC, prefabricated bridge elements are proposed for Types A, B and C, presented in Table 6. Interfaces and connections between the elements shall be designed to fully develop the capacity of the weaker member in axial force, moment and shear (capacity protected design approach).

Table 6: List of prefabricated bridge elements

Type	Prefabricated bridge elements
A	Partial depth precast panels and precast prestress NU girders
B	Partial depth precast panels and precast prestress NU girders
C	Columns, full depth precast panels, steel plate girders and diaphragms

ANALYSIS

The simplified method of analysis for superstructure (as per CHBDC) in combination with the single-mode spectral method of analysis for the substructures and foundations was used. The fundamental periods (Eigenvalues) were computed in the longitudinal (X) and transverse (Y) direction of the bridge. The superstructure's mass and system's effective stiffness including bearings, columns (if any) and piles were used to derive the governing periods for each system. Based on the fundamental periods, the design spectral accelerations and base shears were obtained using the spectral analysis results presented in Figure 6. Elastic seismic effects were calculated for different seismic events and combined as per CHBDC, Clause 4.4.9.2 (a) and (b). Fundamental periods and base shears (before combined) are summarized in Table 7 and 8. For Type A (conventional abutment), the non-seismic and seismic active earth pressure was calculated based on Rankin's theory, and Mononobe and Okabe equations as specified in commentary of the CHBDC (3) respectively. The total backfill forces are also presented in Table 8. The Type B (integral abutment) balances the earth pressures of both abutments using the superstructure as a compression strut. In contrast, the Type C (isolated abutment) does not experience backfill forces because the MSE wall shields the freestanding abutment pier.

Table 7: Seismic performance category of the structure for the 2475-year event

Type	Period (s)		Spectral values		Performance category	
	Long.	Trans.	S (0.2s)	S (1.0s)	Lifeline	Major-route
A	0.86	0.36	0.89	0.45	3	3
B	0.26	0.39	0.89	0.45	3	3
C	3.99	3.99	0.89	0.45	3	3

Table 8: Maximum seismic demands for the 2475-year event per abutment

Type	Seismic Mass (Ton)	Peak Acceleration	Design Acceleration		Base Shear (kips)		Backfill Force (kips)	Displacement (in)	
		Both	Long.	Trans.	Long.	Trans.	Long.	Long.	Trans.
A	1264	1.025	0.777	1.025	1964	2428	1378	4.61	0
B	1148	1.025	1.025	1.025	1264	2353	1378	0.67	1.58
C	458	1.025	0.263	0.263	241	241	0	24.0	24.0

DESIGN

In accordance with CHBDC, Clause 4.4.1, a performance-based seismic design was carried out for the lifeline bridges. In addition, a force-based design approach was selected for ductile substructure elements of major-route bridges to investigate the differences. According to the seismic performance criteria, specified in Table 3 and 4, the design shall adhere to the performance levels defined for the 475-year, 975-year, and 2475-year events. To meet this requirement, the foundation of the structure must remain elastic or endure only repairable damage (4).

The factored resistance capacity of the steel piles was calculated based on 0.04 in outside perimeter corrosion loss of the section for a 75-year design life of the structure. In accordance with CHBDC, Clause 10.9.5, piles were designed as composite columns consisting of steel hollow structural sections completely filled with concrete to meet the axial and bi-axial bending demands. As per CHBDC, plastic hinges are not allowed in the piles; therefore, the resistance and number of piles were determined by satisfying seismic and non-seismic demands with elastic strains. In comparison to Type A and B (traditional abutments), the Type C (isolated abutment) showed significantly smaller horizontal pile design forces which allowed to reduce the overall number of piles and foundation costs.

PROJECT COST

The total project (construction) costs were calculated for the three investigated abutment types. Some budget prices were provided by suppliers/contractors and some were assumed based on previous construction experience. The unit prices highly depend on size and location of the project; therefore, the actual costs may vary. However, the trend and outcome favoring the isolated abutment type is clear and noteworthy. The derived total project costs and percent reduction between different abutment types are presented in Figure 9. The total project costs are presented without considering the cost of additional mobilization/demobilization, traffic control, contingency and engineering service fees.

For the isolated abutments (Type C), (1) the bridge length can be reduced by 12 ft, (2) the earth pressures on abutment piles can be avoided, (3) the substructure elements such as abutment seats, shear keys (if applicable), wingwalls, backwalls and curtainwalls can be eliminated reducing the vertical loads on abutment piles by 30%, and (4) the seismic demands can be mitigated due to the mass reduction. All of these have meaningful effects on the abutment foundation costs. The study shows that the cost savings of up to 40% (Figure 8) are possible for the foundations of isolated bridge abutments when compared to the conventional abutments (Type A). This effect has in this investigation only a minor impact on overall project costs because the foundation costs account only for up to 20% of the overall total costs. However, it is understood that the contribution of foundation costs can increase up to 50% of the overall project costs for major bridges in poor soil conditions which demonstrates the cost savings potential of the isolated approach when designing bridges in seismically active zones.

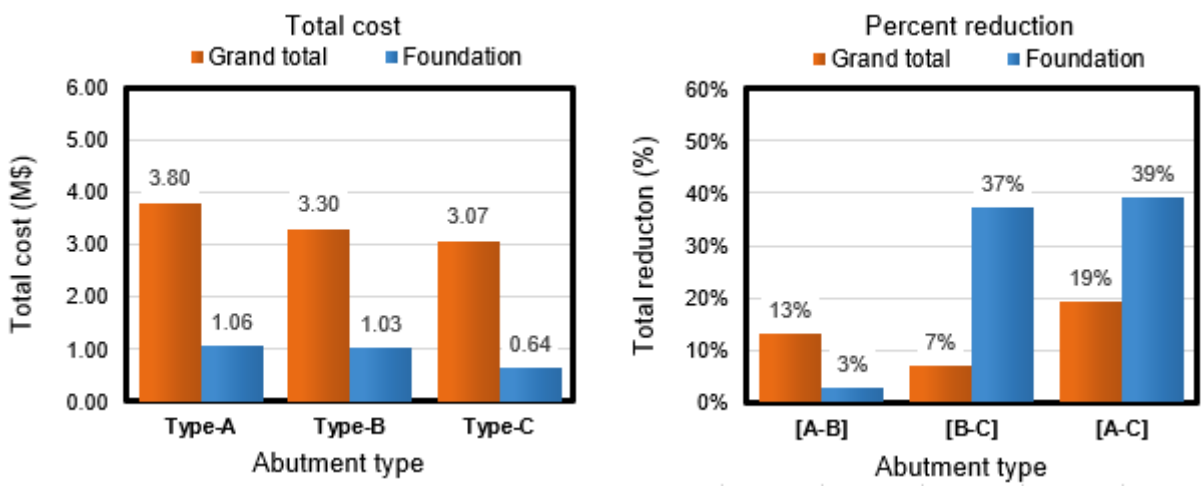

Figure 9: Total construction and foundation costs for the three different abutment types

PROJECT SCHEDULE

Traffic delays related to bridge replacement and rehabilitation negatively influence economic growth opportunities. If such missed economic opportunities are expressed in costs and considered as lost opportunity costs in the overall financial equation, further savings are possible when using the ABC approach. Therefore, the comparison of the three investigated abutment types included a review of the construction schedule and the possibility of time savings. A construction schedule (Gantt Chart) for the three types is presented in Figure 10 which underlines the fact that substructure construction is further accelerated if the isolated abutment type is selected. This schedule analysis does not consider possible reductions of construction time if the jump span length is optimized to meet project objectives. For instance, a longer jump span further reduce the volume of approach fill works without increasing costs meaningfully. Approach works (backfill and MSE wall construction) are now completely independent from the substructure and superstructure works allowing various contractors working parallel during construction.

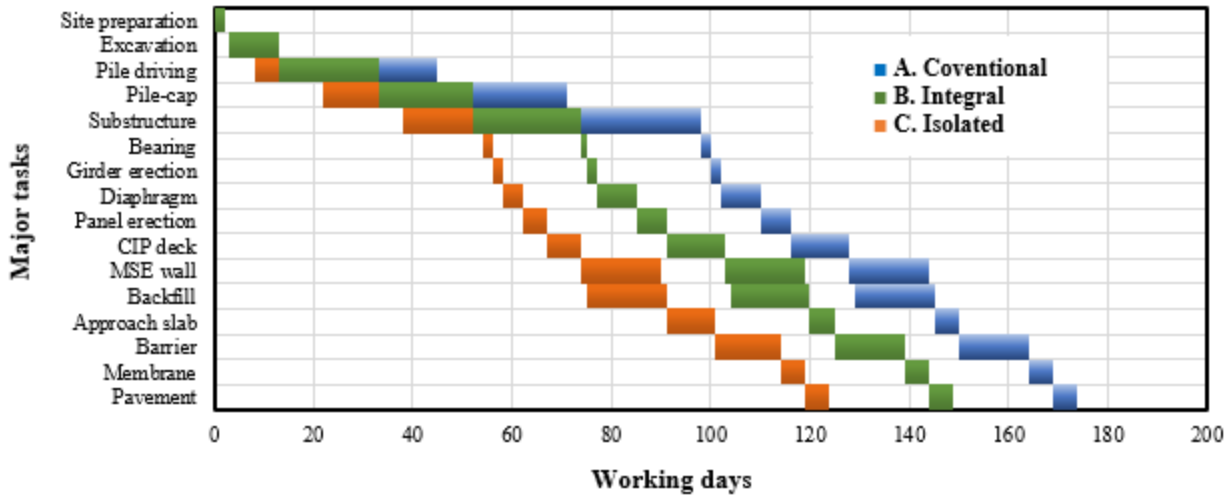

Figure 10: Assumed construction schedule for the three investigated abutment types

SUMMARY AND CONCLUSIONS

The main results of this investigation can be summarized as follow:

1. The isolated abutment type reduces force effects on piles and thus foundation costs.
2. The isolated abutment type eliminates finger plate or modular expansion joints in the bridge deck.
3. For the isolated abutment type, the construction of approaches is independent from substructure and superstructure works. This has the potential to accelerate the construction schedule.
4. The isolated abutment type easily overcomes complex geometries without increasing costs.
5. For the isolated abutments type, the area of the MSE wall slightly increases (because no backwall is required) while the overall approach backfill volume decreases.
6. The isolated abutment type is highly compatible with current ABC techniques and recommended for such projects.

Because of cost and schedule benefits, it is recommended to promote isolated bridge abutments even for smaller bridges if this reduces the number of piles and accelerates the work for the deep foundations. The reduced construction time is most beneficial for bridge projects in cold temperature regions (e.g. Alaska and Yukon) where only a relative short period of good construction weather is available.

ACKNOWLEDGEMENTS

The authors would like to acknowledge Ujjal Chakraborty of exp. for geotechnical advice. Earthquake Protection System is also gratefully acknowledged for technical advice and budget price of the friction pendulum bearings (FPBs).

REFERENCES

1. Mohammad Saifuzzaman, Matthias Schueller and Ryan Taylor. 2018. *Isolated Bridge Abutments – A Comparison with Traditional Abutments*, Quebec City, Quebec, Canada.
2. Priestley, M.J.N, Calvi, G.M. and Kowalsky, M.J. 2007. *Displacement-Based Seismic Design of Structures*, IUSS Press, Pavia, Italy.
3. CSA 2014. *Canadian Highway Bridge Design Code and Commentary*, CAN/CSA S6-14, Canadian Standard Association, Mississauga, Ontario, Canada.
4. BCMoT 2016. *British Columbia Ministry of Transportation, Bridge Standards and Procedures Manual (Supplement to CHBDC S6-14)*, Victoria, British Columbia, Canada.

RAPID BRIDGE DECK RESTORATION WITH “FAST TRACK” HYDRODEMOLITION AND VERY EARLY STRENGTH LATEX MODIFIED CONCRETE

Patrick Martens, P.E., Bridge Preservation and Inspection Services, (636)441-1376, patrickmartens161@gmail.com

ABSTRACT

"Fast Track" Hydrodemolition with Very Early Strength Latex Modified Concrete (VESLMC) is an effective and expedient process for performing bridge deck rehabilitation and preservation. The robotic removal process includes the use of high pressure water blasting in order to selectively remove all weakened or deteriorated concrete with a single pass of the waterjet. The resulting surface preparation is very roughened and highly bondable for a dense concrete overlay.

The use of rapid setting cement in a latex modified concrete produces a dense concrete that cures out and is traffic ready in as little as three hours. VESLMC can be poured to as thin as 1 1/2" in nominal thickness, and it will shield the deck from the penetration of chlorides, giving upwards of 25 years and beyond of renewed surface life.

The "Fast Track" process has been used by numerous agencies in addressing the quick overhaul of bridge deck surfaces while minimizing inconvenience to traffic. Work can easily be accomplished in a limited work window, such as over weekends. This makes it a popular choice in metropolitan areas and along interstates and other highly congested routes. For extremely sensitive traffic areas, the work can even be performed during overnight hours.

INTRODUCTION

The most important aspect to any dense concrete overlay installation is establishing an effective and tenacious bond with the substrate. This means making sure all delaminated, deteriorated, or weakened concrete is removed from the deck surface prior to placing the overlay. This preparation is most efficiently done with the use of hydrodemolition equipment. In addition to the removal of all weakened concrete, hydrodemolition will provide a very rough surface profile. Combine this surface profile with the use of a rapid-setting concrete overlay, and there is the opportunity to complete bridge rehab projects in 48 to 60 hours. This can only be done though with the use of a calcium sulfo-aluminate cement, combined with Latex Modified Concrete, which provides a mix that is traffic ready in as little as three hours.

A four step process is used to perform the needed work to completely rehabilitate the deck surface. This includes milling of the surface, hydrodemolition, deck clean-up, and the installation of the VESLMC.

THE “FAST TRACK” HYDRODEMOLITION PROCESS FOR RAPID BRIDGE DECK RESTORATION

The first step to the process in achieving a rapid restoration is preliminary cold-milling of the surface prior to the hydrodemolition operation. This provides two very important functions. First it removes any existing overlay material (including any existing wearing surface) to gain initial access to the original deck. Second, milling opens up the concrete deck surface to allow the waterjets to engage immediately with the cutting process. If the top of the original surface is not roughened, the jets will initially ricochet off the top of the smooth deck surface. This will result in a longer time period to cut the deck concrete.

For rapid restoration type work (such as over weekends), it is critical to remove as much material from the deck, as fast as possible. Cold-milling is the best means to do this. By limiting the mill size (25 tons or less), damage to the deck is avoided. Any microfracturing that might be left in the surface after milling will be incidental, and should be eliminated with the hydrodemolition operation through the impact or pressurization obtained by the waterjet. Most important to the milling operation is to avoid coming into contact with the top mat of deck steel to prevent damage.

The second step in the process is the hydrodemolition process, which is robotic. This includes calibration of the robot and a total surface treatment of the entire top surface of the deck. The objective of the waterblasting is to selectively remove all the delaminated or weakened concrete that now remains in the top surface, and simultaneously provide a very roughened and bondable surface.

The calibration will be determined through factors such as water pressure, optimum water flow rate, correct speed of the cutting head, step of the machine, and characteristics of the jet itself, such as the nozzle diameter, type, movement pattern of cutting head, and distance between the nozzle and the concrete surface. The initial calibration is achieved in two distinct test areas on the deck. First a desired cutting depth in a designated area of sound concrete (normally ½") is performed to show the equipment can achieve the desired removal on the sound slab and also provide a roughened and bondable surface. For "Fast Track" hydrodemolition, this requires a single pass of the waterjet to perform the necessary removal. With the same settings, the equipment is then moved to a designated area of the deck, where deteriorated concrete is perceived to exist, and with the same settings, the hydrodemolition operation is performed. After corresponding clean-up of the debris, the second test area should show that all defective concrete has been removed. If not, further calibration is necessary. When both test areas are performed satisfactorily, the calibration is deemed complete and the parameters are set for the waterjet.

After calibration is confirmed, the process of performing total surface hydrodemolition of the bridge deck can begin. The operation will begin on one end of the bridge and move along in various passes until the entire surface is completely hydroblasted. For rapid restoration projects, production is paramount in expediting the work. The key to this is in the volume of water consumed by the robot during the operation. The more water that can be run through the unit, the faster the hydrodemolition work can be performed. Some hydrodemolition pumping units can produce over 70 gallons of water per minute through the cutting nozzle, which can mean in the neighborhood of 100 square yards per hour in cutting production.

Step three includes the deck clean-up of all slurry and rubble that is left in place by the hydrodemolition operation. This needs to take place as quickly as possible behind the robot, and prior to the debris drying on the deck surface. This should be done with vacuum collection type equipment that is capable of removing both wet debris and standing water within the operation. Upon completion of the clean-up, the areas of selective removal will be quite apparent (figure 1).

Figure 1 – Selective removal obtained through "Fast Track" hydrodemolition.

The fourth step is the actual overlay installation. Placement is done with a Bidwell finish machine designed specifically for bridge deck placements. Prior to the placement of the overlay, as a final measure, to insure a clean surface, either an abrasive blast or (preferably) a high pressure water blast in excess of 7000 psi, is performed. This insures all contaminants and laitance are removed from the surface and the pores in the deck substrate are opened up for the latex overlay to bond to it. The deck is then wetted to a saturated surface dry condition and covered with plastic to keep the deck from drying out prior to the pour. For hydroblasted surfaces, no grouting of the roughened deck surface is required for the VESLMC.

Upon placement, an immediate wet burlap cure is essential to the success of the installation. The burlap needs to stay in a very saturated state throughout the curing period, which is a minimum of three hours. The burlap is also covered with plastic to help keep the moisture locked in. After the curing period, the overlay is deemed traffic ready, provided the specified compressive strength is met within the curing period. In warmer temperatures, 3000 psi is easily achievable in three hours or less.

VESLMC

The only difference between conventional LMC, which uses a type I Portland cement, versus VESLMC is the substitution of the cement type – a calcium sulfo-aluminate cement is used with VESLMC. This cement provides for the rapid setting capabilities. Other ingredients of the mix are essentially the same. The latex is added in the form of an emulsion through the mixing water and acts as a water reducer.

The latex itself is a suspension of tiny, microscopic styrene-butadiene polymer particles in water. These particles are hydrophobic in nature, or excellent water resistors, and prefer to attach to a nonaqueous surface. Upon mixing with the other ingredients in the concrete, the polymers work to separate themselves from the emulsion and start to form an attachment to the other components in the mix (cement, aggregates), the deck surface itself, and also attract to fuse together to each other. Styrene-Butadiene latexes, such as the Modifier A, used within Latex Modified Concrete, are excellent adhesives, and provide good chemical adhesion to the existing deck concrete [1]. Because of their small size, the particles can also enter and seal capillaries that is formed as free water is used up during the hydration process. The left in place polymers densify the mix and make it very impermeable. The resulting VESLMC surface becomes the wearing surface and shielding mechanism for the original deck surface to protect it from infiltration of water and chemicals.

These specialty concrete mixes are produced on site through a mobile, volumetric mixer. Calibration of each mobile mixer used for the job is performed to verify the appropriate mix proportions and yield of the machines. Nighttime pours are highly recommended with a rapid set mix.

Due to the rapid setting nature of the VESLMC, citric acid will often be used to help control the mix temperature and delay the set time in the field operations.

CHARACTERISTICS OF VESLMC

Latex Modified Concretes (including VESLMC) offer increased durability, flexibility, and bondability, when compared to conventional Portland cement concrete mixes. This makes it an ideal product for thin lift overlays. Latex overlays can be placed as thin as 1 ½" in nominal thickness, but they are adaptable for the variable depths created with a hydrodemolished surface.

CONCLUSION

The "Fast Track" hydrodemolition methodology for preparing and preserving bridge decks has been used for over 30 years in numerous states as a tool for rehabilitation of decks. It incorporates a selective removal of deteriorated concrete while employing a monolithic repair product that is also very dense in order to prevent the infiltration of chlorides to the deck. When used as an overlay system, Latex Modified Concrete protects and extends the deck life by as much as 25 years and beyond. When it becomes necessary to make repairs in an accelerated fashion, such as over weekends, Very Early Strength Latex Modified Concrete becomes a viable option. This can be invaluable in metropolitan areas, on high volume interstates, or where ever traffic is a consideration in the project development.

REFERENCES

1.Doty, Peter A, 2004. Covered in Latex. *Roads & Bridges Magazine.*

TDOT I-240 MemFix4 – CMGC – Memphis, TN

Jake Williams, PE, Alfred Benesch & Company, 615-370-6079, jwilliams@benesch.com
Chris Kelley, PE, Alfred Benesch & Company, 615-370-6079, ckelley@benesch.com
Lia Obaid, PE, Tennessee Department of Transportation, 615-532-7522, lia.obaid@tn.gov
David Paris, PE, Kiewit Infrastructure South Co., 501-399-5269, david.paris@kiewit.com

INTRODUCTION

Project Purpose and Need

Interstate 240 (I-240) forms a loop around the southern boundary of Memphis, Tennessee and serves as a critical east-west connection for travelers and commerce at the convergence of three interstates and crossings of the Mississippi River. Dubbed MemFix4, this project area at the Poplar Avenue interchange has seen its fair share of past projects, with the most recent occurring between 2010 and 2015. This specific past project attempted to widen I-240 to an eight-lane mainline and improve traffic flow through the interchange. However, widening was not fully completed due to hidden conditions revealed during construction. All bridges in the interchange were found to have short driven piles at their abutments and were supported only by spread footings at each pier. When this was discovered during the previous widening project, work halted in areas where there was concern of destabilizing the existing structures.

The Memphis area resides in the influence zone of the New Madrid Fault, which in 1811 and 1812 produced four of the most the powerful earthquakes east of the Rocky Mountains in recorded history. The discovery of insufficient foundations supporting these structures made addressing this issue a top priority. The Tennessee Department of Transportation (TDOT) realized that the next project needed to replace the structures while minimizing impacts to the thousands of vehicular travelers through this interchange and the nearly 20 trains per day on the Norfolk Southern Railroad (NSR) I-240 overpass.

The MemFix4 project replaced the two Poplar Ave interchange bridges, the NSR double track overpass and retrofit a third highway bridge over I-240. The eastbound and westbound Poplar Avenue structures were replaced with two-span steel beam structures using weekend closures of I-240 and modular bridge units. The NSR bridge was replaced utilizing a temporary shoo fly alignment and an innovative bridge slide. The Park Avenue bridge was not replaced but underwent a significant seismic upgrade with the pier foundations being retrofitted with micropiles.

TDOT elected to use the Construction Manager/General Contractor (CMGC) delivery method for the purpose of tackling complex challenges, handling delicate coordination issues, and to utilize innovative techniques such as ABC. In CM/GC, the owner, designer, and the Construction Manager (CM) all share an active role in the design of the project and form a project design task force. The goal of the task force is to tackle the challenges of a complex project by implementing innovations based on input from the CM, accelerating the project schedule, and deciding upon a mutually agreed distribution of risk.

The MemFix4 project was the second CMGC pilot project undertaken by TDOT. Besides coordination with NSR regarding the replacement of the I-240 overpass structure, numerous challenges had to be resolved, including maintaining rail operations, minimizing impacts to roadway travelers, implementing ABC techniques, solving utility conflicts, and meeting an aggressive construction schedule.

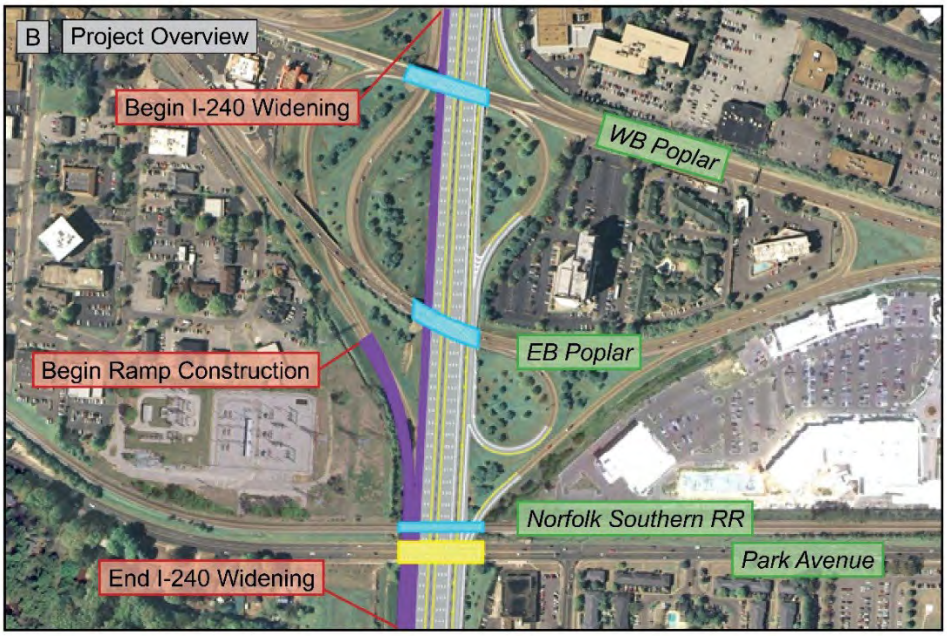

Figure 1 – The I-240 corridor surrounds Memphis, TN. The above shows the specific project limits.

SEISMIC ANALYSIS

A site-specific ground motion analysis was performed to develop a project-specific design acceleration response spectrum (see Figure 2). The project location falls in Seismic Design Category C with a site-specific 1-second period design spectral acceleration (S_{D1}) of .446g, and bridge structures were designed using design strategy Type 1: Ductile Substructures with Essentially Elastic Superstructure in accordance with the AASHTO Guide Specifications for LRFD Seismic Bridge Design (Guide Spec).

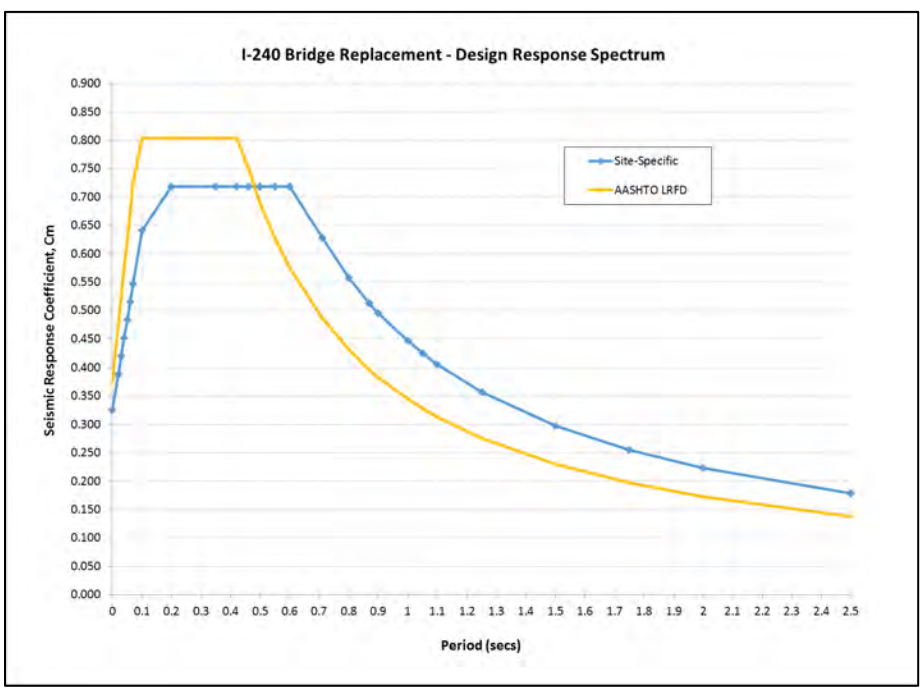

Figure 2 – Design Response Spectrum Comparison

Seismic analysis of the roadway bridge structures utilized LUSAS 3D Finite Element Modeling (FEM) software for multi-modal spectral analysis in combination with LPILE for foundation modeling. The use of FEM allowed for rapid iteration and optimization of the bridge configuration, including bridge super- and substructure properties and foundation stiffness. The ability to precisely control and quickly modify bridge properties was especially well suited to meeting the combined demands of ABC construction and high seismic conditions and allowed the design team to quickly respond to feedback from the Owner and Contractor during the design phase, which is key to the success of the CMGC process.

For the NSR Bridge, seismic design for the temporary shoo fly and permanent structures was based upon provisions listed in Chapter 9 of the American Railway Engineering and Maintenance-of-Way Association (AREMA) publication which details design, assessment, and operational criteria for railway structures. AREMA's seismic risk assessment accounts for multiple factors when developing the structure's Importance Classification. These factors are then used to adjust the return periods for various Performance Criteria Limit States (i.e., Serviceability, Ultimate and Survivability) and subsequently the magnitudes of ground accelerations used in design. Although Memphis is known for sandy soils, liquefaction was determined to be unlikely based upon the subsurface conditions encountered at the site.

The new five-span NSR bridge was classified as a multi-span regular bridge due to uniform pier stiffness, relatively uniform superstructure mass and stiffness, straight alignment, and very minor skew. Therefore, the equivalent lateral force procedure was utilized. The period of the structure, T_m, was computed as 0.185 seconds. Seismic weights were calculated based upon superstructure dead loads and 50% mass participation of the piers. Longitudinal seismic assessment neglected the abutments for Level 1 and 2 ground motions. For Level 3 ground motions, one abutment was assumed to be engaged, with spans in contact with the backwall. The longitudinal stiffness of the abutments was based upon soil passive resistance equaling 2/3H (ksf) without the flexural stiffness of the abutment piles considered. Longitudinal seismic demand was proportioned to each substructure element based on stiffness for Level 1 through Level 3 ground motions. Transverse seismic demands were proportioned to substructure units based upon tributary area due to simple spans.

POPLAR AVENUE BRIDGES

The Poplar Avenue bridges are comprised of steel plate girder superstructures with composite cast-in-place (CIP) concrete deck, supported by CIP concrete piers and abutments. The steel superstructures were designed to be constructed off-site in modular units and lifted into their final position during a single weekend closure per bridge. Substructures for each bridge consist of closed western abutment on micropiles, a single median wall pier on micropiles, and a stub eastern abutment on driven piles. Western abutments and median piers were constructed under traffic, while the eastern abutments were constructed during weekend closures and re-buried until the bridge replacement weekend.

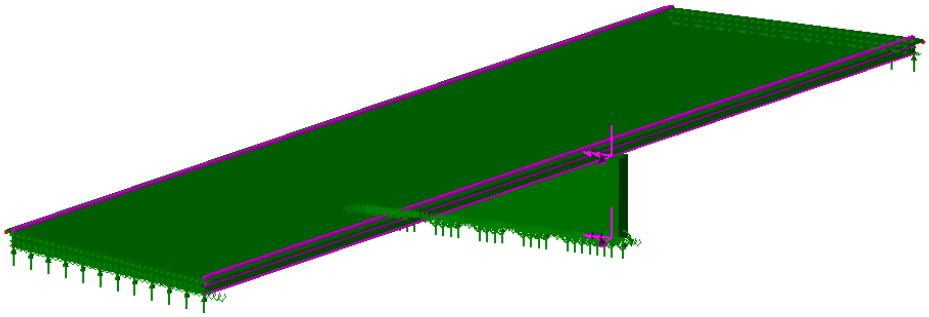

Figure 3 – LUSAS Finite Element Model of WB Poplar, Isometric View

Superstructure Design

Superstructure design was constrained by the need to improve vertical clearance above I-240 with minimal adjustment to the existing Poplar approach profiles. Additionally, both bridges were designed for simple span behavior to eliminate the need establish continuity at the pier, thus minimizing complexity and construction time of weekend bridge replacement. Abutment backwalls are integral with the girders and were poured at the off-site bridge farm and lifted into place with the superstructure units. Typical framing elements were used through most of the superstructure, with additional top flange lateral bracing added on both sides of the pier to ensure lateral load path continuity from bridge deck to pier diaphragms is maintained in the closure pour zone.

Each Poplar Avenue bridge superstructure was built in four modular units at the bridge farm, and then rolled to the project location using Self-Propelled Modular Transporters (SPMTs) while being continuously monitored for excessive deformation during transport to ensure the deck would not be overstressed. The pieces were then lifted into their final position using a tandem pick between a 600 Ton and a 400 Ton crane, with the largest single piece weighing over 1,000 kips with a length of 155 feet. After the superstructure units were placed in their final position, the longitudinal deck joints and closure pour over the pier were completed using Class X Concrete.

Figure 4 – Tandem Pick Between a 600 Ton and a 400 Ton Crane Superstructure Unit Erection

Pier Bearing Design

In addition to serving as the sole link between superstructure and substructure, pier bearing design was primarily driven by two goals:

1. Provide a simple design with low installation difficulty to minimize construction time and risk during weekend closures
2. Fill the vertical gap between existing top of pier cap and proposed bottom of girder, which varies from approximately 8 inches to 18 inches.

To meet these needs, heavy steel pedestal bearings are utilized at the piers. Load is transferred to the substructure through two high strength steel anchors per bearing, which were installed during the weekend closure after demolition of the existing bridge was completed. Bearing pedestals are placed on plain elastomeric pads to accommodate girder end rotations.

Figure 5 – End view of Poplar Avenue Girders showing Bearings

Pier Design

Though the new concrete piers encase the existing median piers, the existing pier structure was largely neglected for the purpose of the new pier design, and the piers were detailed to minimize interaction with the existing structure except at the cap. The new pier wall section was detailed to minimize formwork complexity and maximize speed of construction. The pier wall includes a plastic hinge in the weak axis, which is reinforced with A706 steel to allow the use of a reduced overstrength factor for design of attached elastic elements.

Figure 6 – Poplar Avenue Median Pier During Construction

Micropile Foundation Design

Micropiles were fully designed and detailed in the contract plans. Because the existing median piers were founded on spread footings, micropiles were designed to support all bridge loads in the final condition. Seismic demands governed design in both the axial and lateral direction.

Subsurface conditions in the project area are characterized by dense sands extending to a practically indefinite depth. As a result, axial geotechnical capacity is achieved through soil friction alone. In order to achieve adequate geotechnical resistance, Type B (Pressure Grouted) Micropiles were utilized.

Several casing sizes were investigated for a number of factors. Projected material availability and ability to resist lateral flexure loads were critical criteria for casing selection. Ultimately, 7.625” diameter casings were selected for final design of all structures.

Though micropiles afford the option of aggressive pile batter angles, the design utilized typical 1H:4V pile batter at the piers despite the high lateral demands. This decision was informed by a number of factors, including foundation stiffness effects and a desire to avoid creating a sustained high compression force in the footing. As a result, piles are subject to significant lateral flexural demands in combination with high axial loads in the seismic load case. Pile casing joints within the high flexural demand zones were reinforced as needed.

Micropiles were subject to verification and proof testing at every structure location. Modified load testing schedules were developed to account for LRFD factored design loads and differentiate between testing requirements for Extreme Event loads and Factored service condition loads within a single comprehensive load schedule. All tested piles exceeded their required minimum performance criteria.

Figure 7 – Poplar Avenue Abutment Micropiles

NSR BRIDGE DESIGN

The existing bridge over I-240 was a six-span, double-track, rolled beam bridge constructed by TDOT in 1958 as part of the Memphis Circumferential Interstate Highway project. The bridge had been owned and maintained by TDOT for the last 60 years. The new structure had to meet current seismic design

requirements in accordance with codes developed by AREMA. The proposed replacement structure was a 338-foot-long, five-span, ballasted-deck, double-track, steel deck plate girder bridge.

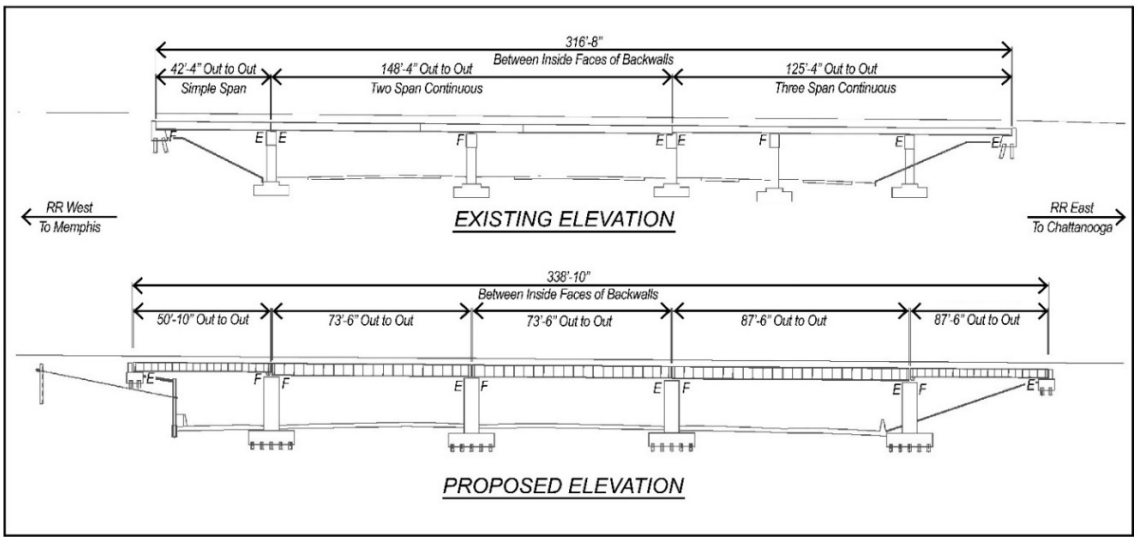

Figure 8 - Existing and proposed bridge elevations

Superstructure Design

Typical NSR deck plate girder structures used on public projects feature a concrete deck utilizing four girders to resist load from each track and additionally a pair of exterior beams to provide a trainman's walking surface integrated into the ballasted deck. However, the high seismic hazard at the project site dictated that the self-weight of the superstructure be minimized to reduce seismic demands on the substructures. To lighten the superstructure, a variance was requested and approved by NSR to use a steel deck plate and eliminate the exterior beams in favor of a discrete trainman's walkway brackets attached to the primary deck plate girders, resulting in a 30% weight reduction versus the typical cross-section.

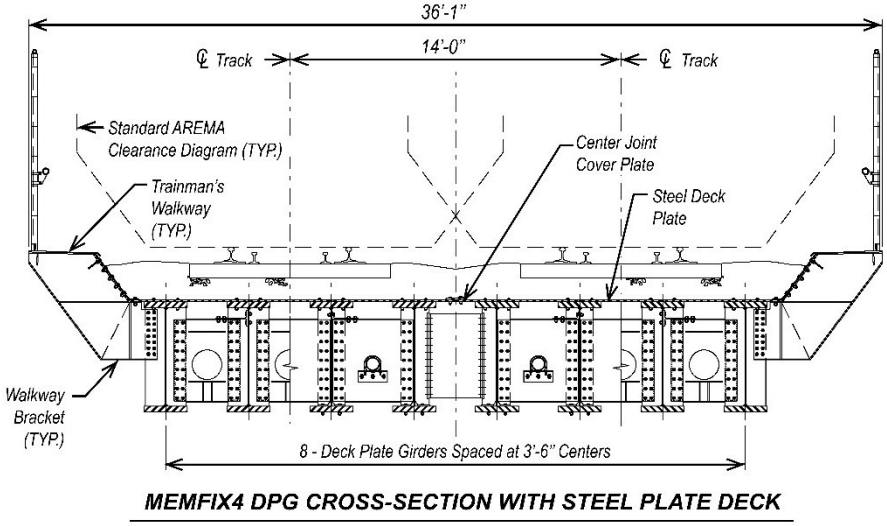

Figure 9 – MemFix4 NSR bridge deck plate girder cross-section

NSR Bridge Slide

The task force explored multiple options to construct the replacement bridge while maintaining rail service and vehicular traffic through the project site. As an additional constraint, Norfolk Southern required that the new bridge be constructed on the existing alignment in order to minimize the introduction of new curves and alignment shifts in this section of rail. Ultimately, it was determined that the use of the same superstructure in both the temporary and permanent locations was the most economical solution. This meant that the permanent superstructure would first be erected on temporary substructures on the adjacent and parallel shoo-fly alignment. During two weekend closures of I-240, the permanent steel superstructure was erected in two beam, modular units which did not require any interruption of train traffic. Once train traffic was shifted to the shoo fly, the existing bridge was demolished making way for the construction of permanent piers and abutments on the original alignment. Once the permanent substructures were in place, a lateral bridge slide of the superstructure from the temporary substructure to the permanent substructure was required.

A scheme for two separate bridge slides was developed by the task force to eliminate the need for a double track outage. Also, in order to minimize the duration of single-track operations, it was decided to move the bridges as fully-intact as possible without removing any dead load due to track and ballast. The design team detailed the superstructure to function as two independent, five-span, ballasted-deck, single-track bridges. These single-track bridges were then moved from the temporary substructure to the permanent substructure one track “half” at a time during full closures of I-240.

Figure 10 – Utilizing a first-of-its-kind center joint allowed the superstructure to be constructed separately and slid one track at a time. Incorporating a custom shoring system allowed the joint to be bolted up, waterproofed, and covered with ballast without impacting the rail.

This approach, which required the lateral repositioning of all five spans simultaneously, necessitated development of detailed special provisions for the slides. These special provisions included a geometry control plan, monitoring surveillance plan, contingency plan, and tolerances for positioning, alignment, elevation, and twist of the bridge.

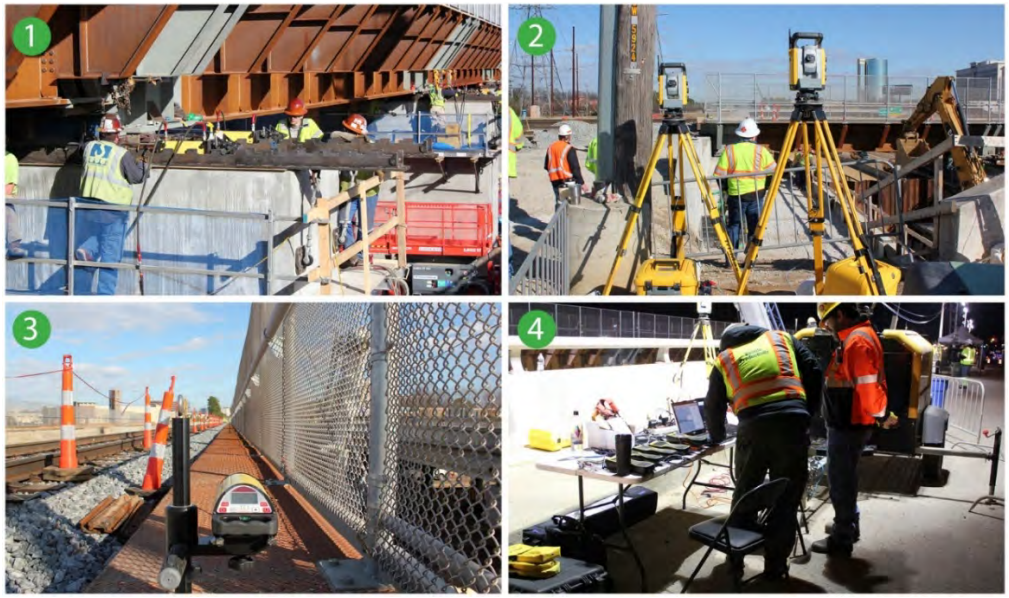

Figure 11 – Careful monitoring during the slide operations

Slide System

In order to perform the lateral slides in a controlled manner and meet the tolerances specified, the GC chose to use a jack and slide system. This procedure used a unified system which included 30 conventional jacks to raise all five spans of each bridge half simultaneously. Once the spans were jacked a few inches, enough to clear the pre-cut bearing anchor rods, they were lowered onto blocking within slide tracks installed along the edges of the temporary and permanent substructures. The slide tracks were made of built-up steel channels with positive key-hole cutouts within the flanges and were anchored to the bridge seats (see Figure 12). The segments of blocking, situated between the flanges of the slide track channels, were made up of steel tube shapes and plates welded together. A low-friction material attached to the bottom steel surface of the blocking, combined with the polished surface of the slide track, reduced the demand on the sliding jacks.

Figure 12 – The slide track at an abutment for the NSR bridge.

Collectively, the design features of the jack-and-slide system allowed the superstructures to be moved laterally in an incremental fashion, allowing the measurement and recording of span movements and ensured that movement to was controlled within allowable tolerances.

The 35'-3" lateral slides of the two 2.2-million-pound bridge halves of the 338-foot bridge superstructure took place over two weekends in February 2019. During these two slides, the interstate was shut down from approximately 10:00 p.m. Friday until about 5:00 a.m. Monday to allow ample time for the GC to mobilize, set up and test the jacking equipment prior to the slides, and then demobilize and clean up the roadway afterward. Additionally, 12-to-16-hour single track outages were granted by NSR.

Figure 13 – The first of two bridge slides; the structure of the siding track is moving into its final location while rail traffic is maintained on the adjacent main track.

The slide of the structure supporting the siding track took place on the morning of February 2nd and returned the siding track to service 16 hours later (see Figure 12). The main track structure slide was performed on the morning of February 9th and returned the main track to service 12 hours later. Both slides were performed within the tolerances specified in the special provision and were completed within the time frames required by TDOT and NSR, a success that can be attributed to the careful planning of the task force and collaboration of all parties involved.

Belden-Laurel; Project No. 20-6(105); Control No.: 31342; Structure No.: S020 38968

Accelerated Bridge Construction

Abstract

The goal of this project is to have the bridge completely prefabricated off-site and will be replaced beginning spring 2018 while the roadway will be closed for 30 working days for the bridge replacement, traditional construction methods would have required the partial or complete closure of the road for several months, resulting in substantial traffic disruption.

Project description

This project is intended to increase the safety and efficiency of highway 20, as well as help provide important economic development opportunities for the surrounding communities.

The project to replace the bridge on U.S. 20 over Middle Logan Creek in Cedar County is part of seven miles of highway pavement repairs and asphalt overlay and is designed to increase the bridge's structural capacity, increase the water way area and eliminate existing and any future scour issues, improve roadway conditions, and widen the bridge and approaching roadway to enhance safety. The Nebraska DOT desires to receive this grant from FHWA to use a variety of innovations on the project.

The bridge replacement project on Highway20 over Middle Logan Creek will employ the first full accelerated construction technique in Nebraska. Instead of taking the typical six months of detours and road construction, the project will inconvenience travelers for about 30 days by using about a 7 miles detour.

Most of the bridge will be pre-cast meaning, the abutment cap substructure; the deck, approach slabs with integrated concrete rail and other parts of the installation will be formed off-site, likely at a location near the bridge site. The precast deck will also have the concrete barrier precast onto the precast panels, which eliminates the need for cast-in-place and cure times after the precast panels are installed. The precast deck integrated with concrete rail will be formed and delivered by certified precaster/prestress plant which is about 140 miles away.

Nebraska department of transportation is not new to this technology in fact NDOT has used and built lots of precast elements in bridge construction but never used a full precast system. NDOT has collected a lot of accelerated bridge construction details from projects around the country and try to take the best of the ideas and combine into one project.

This project takes the approach that for ABC to be successful; ABC Designs should allow maximum opportunities for the general contractor to do its own precasting at a staging area adjacent to the project site or in the contractor's yard with its own crews. This is particularly true for substructure components that have traditionally been constructed by contractor crews.

Substructure components are made of conventional reinforced concrete and can be precast by the general contractor.
Components will be designed to allow the contractor to self-perform the precasting by paying special consideration to the following:
• Components that is simple enough to fabricate.
• Components that allow some tolerance for erection.
• Maximum repetition of components to reduce formwork cost.
• Component weights do not exceed 50 tons.
• Substructure components that do not need prestressing or posttensioning.

Additional reasons for accelerating the construction of this bridge:

- The bridge construction requires a full closure and detour of all traffic
- This highway was closed and detoured recently because of a bridge construction project (fall of 2014) and the department does not want to cause the neighborhoods residents and businesses additional inconvenience and detour delay.
- This ABC method will allow the road to be reopened in about 30 days
- NDOR has used prestressed deck panels on other projects, so this is not new to Nebraska contractors and fabricators.
- NDOR has not used precast elements for substructures but this method has been used by many other States and is proven to be effective
    - The bridge contractor will be allowed to build the precast elements (but not the prestressed deck panels)
- This project will be the first use of precast approach slabs in Nebraska
    - NDOT intend to continue using precast approach slabs for accelerated construction on I-80 in and around Omaha and Lincoln areas where the traffic is very congested and overnight approach slab replacement is very desirable.
    - These Omaha area projects will be let starting in 2018

Performance Goals/Measures

NDOT shall work with FHWA on the development and implementation of a plan to collect information and report on the project's performance with respect to the relevant outcomes that are expected to be achieved through the innovation in the project. NDOT shall report on the specified performance indicators below. Those Performance indicators are established to track 1) speed, quality and efficiency of ABC, 2) public and workers safety, and 3) public satisfaction. Those Performance indicators are considered as the project's stated goals. NDOT will include baseline measures from previous experience and lesson learned as well as post-project outputs, and will inform the AID Demonstration in working toward best practices, programmatic performance measures, and future decision making guidelines. NDOR will submit a final report to FHWA within 6 months of project completion which documents the process, benefits, and lessons learned including development and/or refinement of guidance, specifications, or other tools and methods to support rapid adoption of the innovation(s) as standard practice.

Project Expectation and goals

- Using traditional cast-in-place construction methods would have required a six-month road closure and detour to do the job, the Nebraska DOT estimated, rather than the 30 days it will take to remove the old bridge and install the new one with accelerated methods. As a result, the project performance goal is reducing the time traffic is impacted by more than 50 percent. NDOT has been engaging the AGC in Nebraska and the neighboring states and will hold another contractor /AGC meeting after the completion of the project seeking feedback and lessons learned on how to improve /simplify the strategy and details on future implememtation.
- By closing the bridge for ABC traffic the risk of incidents or worker injuries will be minimized therefore safety improvement is expected during the project. Widening the bridge and updating the side barriers and beam guards are expected to improve future safety on the bridge.
- Motorists will notice a smoother ride across the bridge than in the past, since asphalt overlay over waterproof membrane will also be used as part of future and "deck for life" preservation strategy. The Department already had done public involvement and intends to survey the residents, farmers and businesses before and after the project to seek any feedback and measure their satisfaction.

Project cost

Conventional construction 6 months: $1.1M
Duration for ABC: 30 days

Project cost ABC: $1.78M (see attached bid tab under group 6A)

This cost was based primarily on previous projects which precast deck elements were used such as NUDECK on Kearney East project and usage of UHPC connection on precast superstructure modular built on geosynthetic abutment on Primrose.

Using prefabricated bridge systems and innovative materials nearly will double the cost of building the bridge compared to traditional construction, but a preliminary economic analysis that included user costs estimate that overall, the project may cost about the same or maybe less than a project using conventional methods. User cost savings on the project totaled estimated to be $300,000 because the shorter bridge closure time resulted in lower vehicle operating costs and delay costs.

Incremental Innovation

NDOT innovation philosophy is:
_ integrating diverse structural systems Innovation
_ Incremental improvement in a number of specific bridge details to fully leverage previously successful work.

Project Innovations

_ Precast NUDECK
_ Superstructure units create a full integral abutment for rapid construction
_ SCC precast and CIP mix
_ SCC joints
_ UHPC mix
_ UHPC joints
_ Durable, moment-resisting joint between deck panels and approach slab panels.
_ Durable, moment-resisting joint between the 42" concrete rail segments.

Project Innovations

_ NUDECK which is a precat deck panel system researched and implemented successfully last year with FHWA and University of Nebraska partnership. (See attached Kearney Bridge presentation) .

_ Use of 48" panel to girder pocket spacing connection instead the traditional 24" (see narrative attachment for more information and details of the NUDECK system).

_ Use of UHPC for panel to panel transverse connection, also, to connect NUDECK, precast approach slab to integral abutment at the end floor. (See attached presentation and plans).
_ SCC will be used to improve consolidation and increase the speed of construction for:

1- Precast Abutment cap to piles connections,
2- Precast/prestrssed NU girder to precast deck panel connections longitudinally
3- Approach slabs connections.

Nebraska ABC Project information

Existing bridge
US 20
Bridge over
Middle Logan creek
Cedar County, NE
3-spans steel girder bridge- 100ft
Built in 1938

Replacement design by Nebraska DOT (see attached plans)
_ Single simple span 130 ft long
_ Bridge width 42'-8"out to out
_ 7- Prestressed NU 1100 (43.3")
_22- half NU panels 12 ft x 21'-8" integrated with 42" concrete rail
_ 8- approach slab panels- 10'-8" x 23-'-3" integrated with 42"concrete rail
_ 8- paving section panels- 10'-8" x 33-'-6" integrated with 42: buttress rail

ABC Stages

Stage 1 work (Prior to bridge closure)

_ Prercast the NUDECK panels and NU girders by certified precaster
_ precast abutment cap and wing wall on site or close to the site

Stage 2 work (30-day "ABC" period)

_ Close Bridge / Demolish existing bridge
_ Drive piles and steel sheetpiles
_ Assemble precast wings (4 pieces)
_ Assemble integral abutments cap (2 pieces)
_ Assemble Grade beam cap (2 pieces)

Stage 3 work (30-day "ABC" period)

_ Erect NU girders (7 girders)
_ provide NUDECK seat after shim shots (7 girders)
_ Assemble NU precast deck (11 x 2 pieces for both sides))
_ Assemble precast approach slabs (4 approach slab pieces and 4 paving section pieces total of 16 pieces for both sides)
_ Cast SCC deck panel closure pour over center girder and fill SCC in the 4" hole to connect the precast deck panels to the girders.
_ Cast UHPC closure transverse joints and grind precast deck
_ Re-open Bridge to traffic – end ABC period

_ Apply asphalt overlay with water proof membrane under roadway work phasing plans

ABC SUPPLEMENTAL SPECIFICATIONS

Special Provisions

_ Precast Concrete Substructure Elements
_ Prefabricated Superstructure NUDECK
_ Precast Approach Slab Elements
_ UHPC Infill Joints
_ Removal of Existing Structure

_SCC mix field application

_ Performance base UHPC specifications

Nebraska DOT Commitment:

NDOT is aware of the required commitments to the project and accept the willingness to:

(1) Participate in monitoring and assessment activities regarding the effectiveness of the innovation(s) and subsequent technology transfer and information dissemination activities associated with the project;

(2) Accept FHWA oversight of the project; project is already a PODI (so this is a good first step)

(3) Conduct before and after customer satisfaction determinations; and

(4) Commit to deployment of the innovation as standard practice in the future, if the deployment is successful.

(5) NDOT and FHWA Colorado/Nebraska Office are planning to show case this project by inviting around 20 officials including the neighboring states state bridge Engineers to witness the erection and the grouting of the substructure and the precast deck panels

Nebraska Department of transportation, NDOT met with FHWA Nebraska division and plan to apply for Accelerated Innovation Deployment (AID) Demonstration funds

- Nebraska understands that these funds may be awarded up to the full cost of the innovation (not just the delta costs) up to a maximum of $1 Mill
- In the application NDOT will include:
- Prefabricated Bridge Elements and Systems – EDC 1
- Accelerated Bridge Construction (ABC) – EDC 2
- Ultra-High Performance Concrete Connections for Prefabricated Bridge Elements (UHPC) – EDC 3 & 4
- To provide concrete evidence of project milestones, financial capacity, and commitment in order to support project readiness, the department already established the following:
    - The project utilizes federal fund 80-20 split
    - The project letting is October,2017
    - Construction to start in April , 2018
    - The design plans are already at 100% completion and was let February 2018 (see attached)
    - Completion date of the bridge part is June,2018

TDOT Fast-4 on I-24 – ABC Project Using Design-Bid-Build

Ted Kniazewycz, P.E., F.ASCE, Director – Structures Division, TN DOT (615)741-3351
ted.kniazewycz@tn.gov

ABSTRACT

The Tennessee Department of Transportation has embraced the Accelerated Bridge Construction and alternate project delivery philosophies in the completion of several diverse projects. Recently, the Department successfully utilized the more traditional Design-Bid-Build (DBB) delivery method on the high-profile Fast-4 project in downtown Nashville where two pairs of bridges were replaced with only 4 weekend closures. A high degree of plans coordination by the engineer and the development of a comprehensive logistic plan by the contractor along with attention to design, detailing and execution were all required to lower project risk and deliver a successful DBB ABC project.

INTRODUCTION

The TDOT Fast-4 on I-24 project was the first large scale Design-Bid-Build ABC project undertaken by the Tennessee DOT. The project included the replacement of four bridges over four weekends utilizing prefabricated bridge elements (PBES) on existing strengthened substructures. The PBES utilized precast, prestressed concrete box beams with longitudinally oriented conventionally reinforced full depth deck panels. The geometric configuration of two bridges led to a framing system that had tapered box beam spacing and full depth panels that were trapezoidal in shape such that no two beams or panels were of the same dimensions.

The project design followed TDOT's ABC philosophy of minimizing inconvenience to the traveling public by limiting full roadway closures to a maximum of 56 continuous hours over a regular Friday night to Monday morning work period.

Prior to the weekend closures, the substructures were widened and strengthened to facilitate the required geometric configuration for the project. The addition of shear walls provided capacity to the existing caps and allowed for the shifting of the beam bearing areas for the new beams. This work could be completed under regular work schedules as it did not impact the traveling public.

The contractor for the project, Bell & Associates Construction, LP out of Brentwood, Tennessee, had full responsibility to determine the means and methods for completing the project – including the phased demolition of the project, logistics for on-time sequential delivery of the beams and panels, and installation of all required components within the maximum 56-hour work window. Some complicating factors on the project include an active mainline CSXT railroad track under two of the bridges along with restricted right-of-way that limited working and staging areas for the numerous PBES components. For the largest bridge replacement effort, there were a total of 155 loaded trailers with beams or panels that had to be maneuvered through the congested site. An additional complication on the site was the need to establish level bearing areas between the existing beams to allow for the placement of variable height steel shims during the weekend construction phases. These bearing areas incorporated the smaller existing beam seats and were constructed using conventional concrete and mild reinforcing. Once these areas were completed, the Contractor could obtain the bearing area elevation and calculate the needed shim thickness.

Other details incorporated into the project included a new TDOT continuity diaphragm detail that provided connection to the substructures with minimal weekend construction impacts, deck continuity reinforcing for the full depth deck panels and a refined deck joint detail that helped to simplify the panel fabrication process.

PROJECT DETAILS

The Fast-4 project involved the major rehabilitation of two pairs of bridges along a ½ mile stretch of I-24 in downtown Nashville. The traffic within the project limits was approaching 130,000 ADT with no break in traffic volumes between week-day and week-end counts due to the number of business and tourist destinations accessed from this interstate corridor. The bridges were experiencing deck failures which resulted in emergency lane closures causing major traffic disruptions. TDOT selected their preferred ABC method that took advantage of the bridge components that were still serviceable and allowed for new precast concrete elements to be fabricated to fit the serviceable components. Additionally, the prefabricated elements could be procured at an on-demand schedule which resulted in minimal impact to the traveling public and reduced risk to the contractor since the bridge elements were new construction and there was total control on the element dimensions and opportunities to provide improved fit-up tolerances.

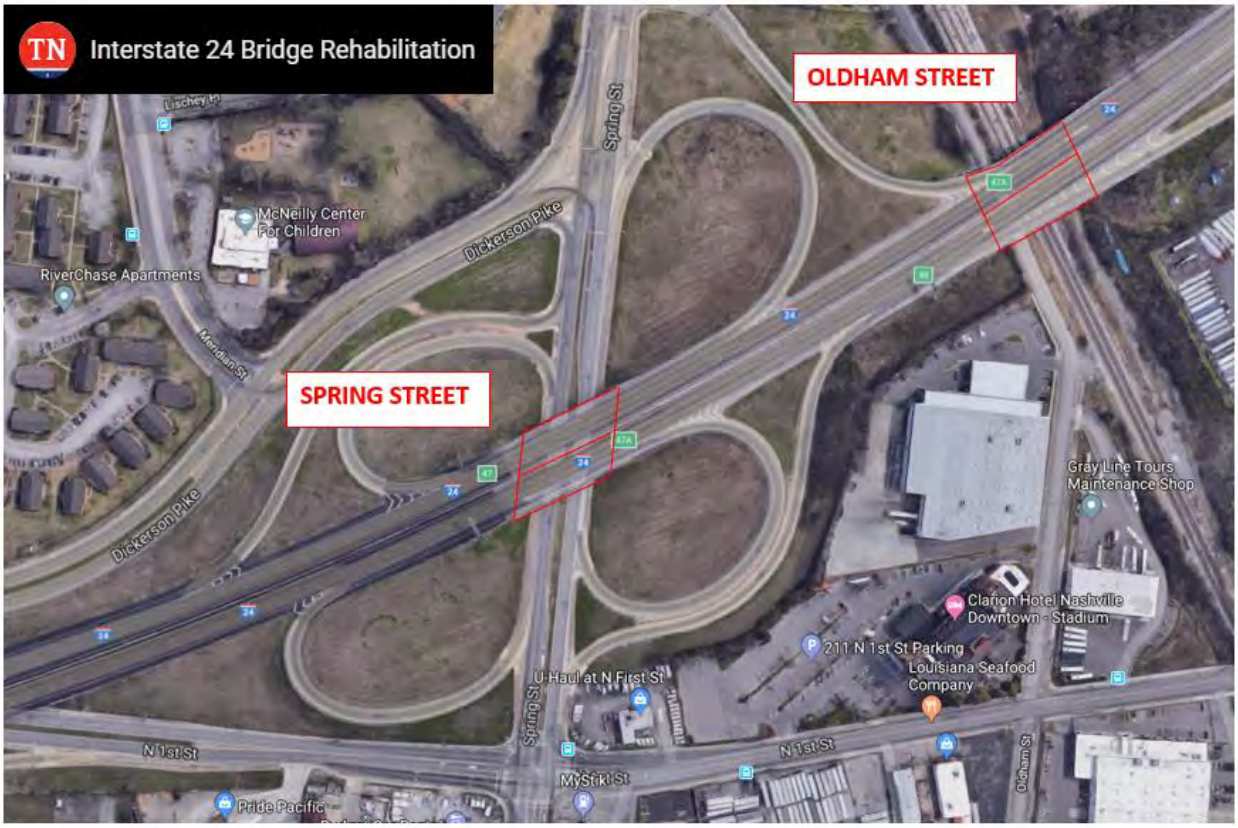

SPRING STREET BRIDGE SITE

These two bridges were four-span structures comprised of AASHTO Type III beams with continuous concrete decks. The structure was constructed at a 45-degree skew and had accommodations for full cloverleaf entrance / exit ramps. The substructures were multi-post bents and stub type abutments supported on driven HP piles.

Because of the need to adjust beam seat location and redistribute where loads were applied, the existing substructures were strengthened through the addition of reinforced concrete shear walls.

For this location, it was possible to place the new prestressed box beams in a parallel framing configuration which allowed for uniform beam lengths per span and typical dimensions for the full depth deck panels.

Having both new beams and panels reduced the risk of panel fit-up issues. Additionally, the connection of the panels to the box beam was designed to be only 12” wide which provided ample support width for the deck panels on the 36” wide beams. The deck panels were orientated parallel to the beams instead of the more traditional transverse orientation. Panels were designed to a maximum length of 45 feet which allowed for a single panel in the end spans and two panels in interior spans. Joints between the panels in both transverse and longitudinal directions were strengthened with lacing bars which provided a strong connection between the panels and the projecting beam stirrups.

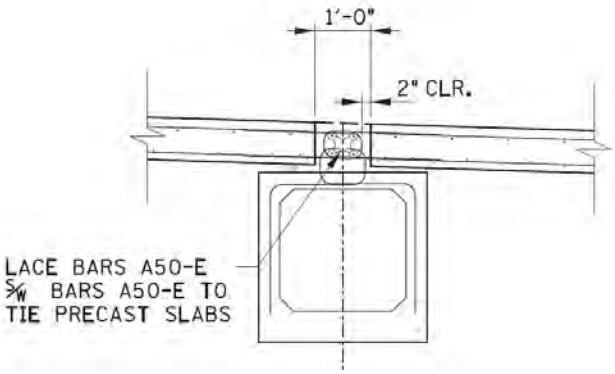

OLDHAM STREET BRIDGE SITE

These bridges were five span continuous bridges with steel beams spanning over a local road and a mainline CSXT railroad. The rehabilitated bridge utilized the existing substructures which had to be strengthened for the heavier precast superstructure and variable beam spacing.

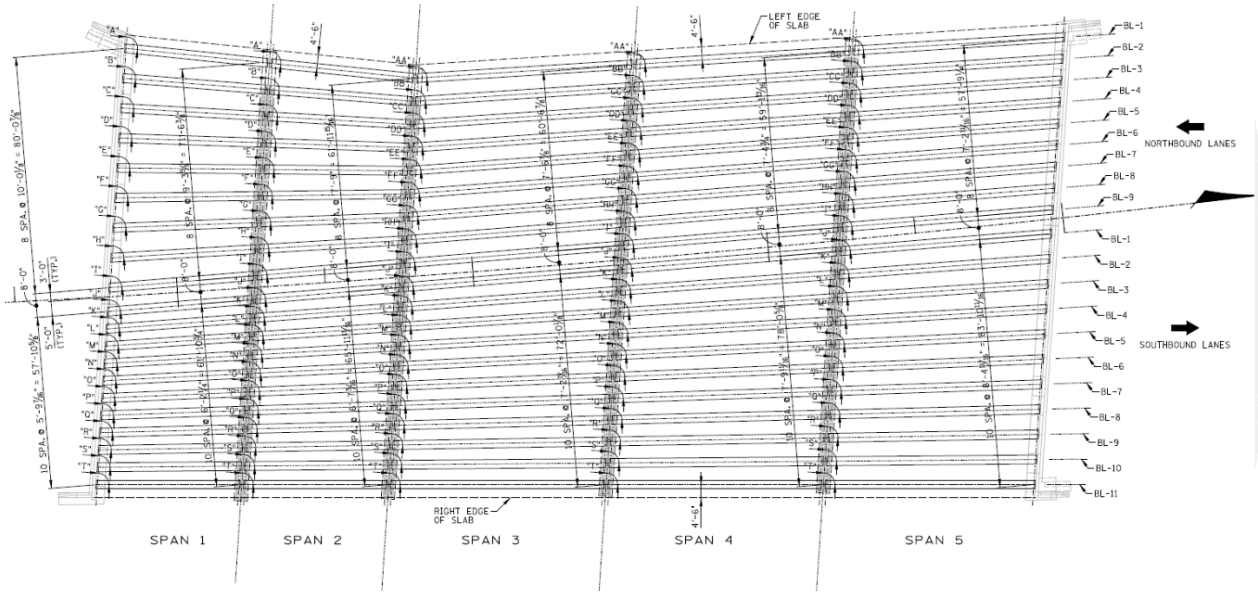

FRAMING PLAN

Beams were equally spaced at each substructure on each side of the CL of the roadway. This provided a uniform layout for the beams and allowed for controlled dimensions of the panels. It was important for the beams to align at each substructure so that the new diaphragm detail developed by the department could be utilized. TDOT had traditionally used a diaphragm that ran the full length of the bent providing continuity for the superstructure. The new detail only provides the diaphragm for the width of each beam.

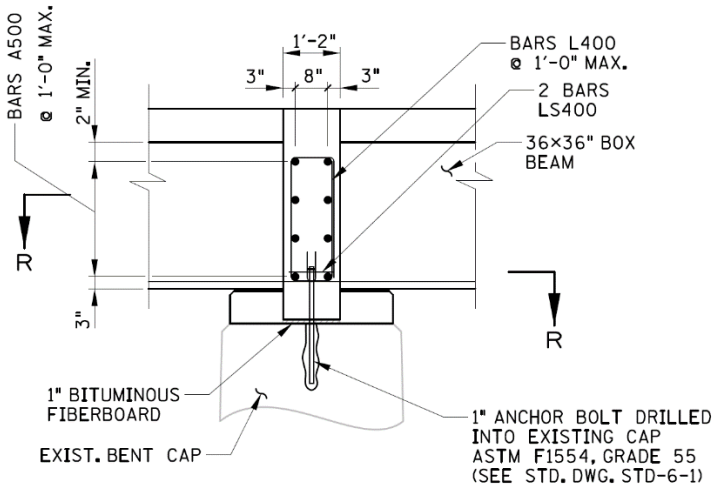

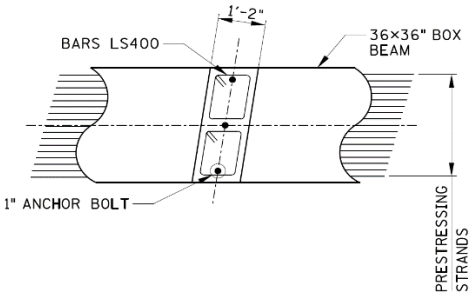

With the variable beam spacing for the panels, the panel geometry was the next issue to tackle. The parallel framing of the beams resulted in each beam being a unique length. It also made every full depth deck panel a unique dimension.

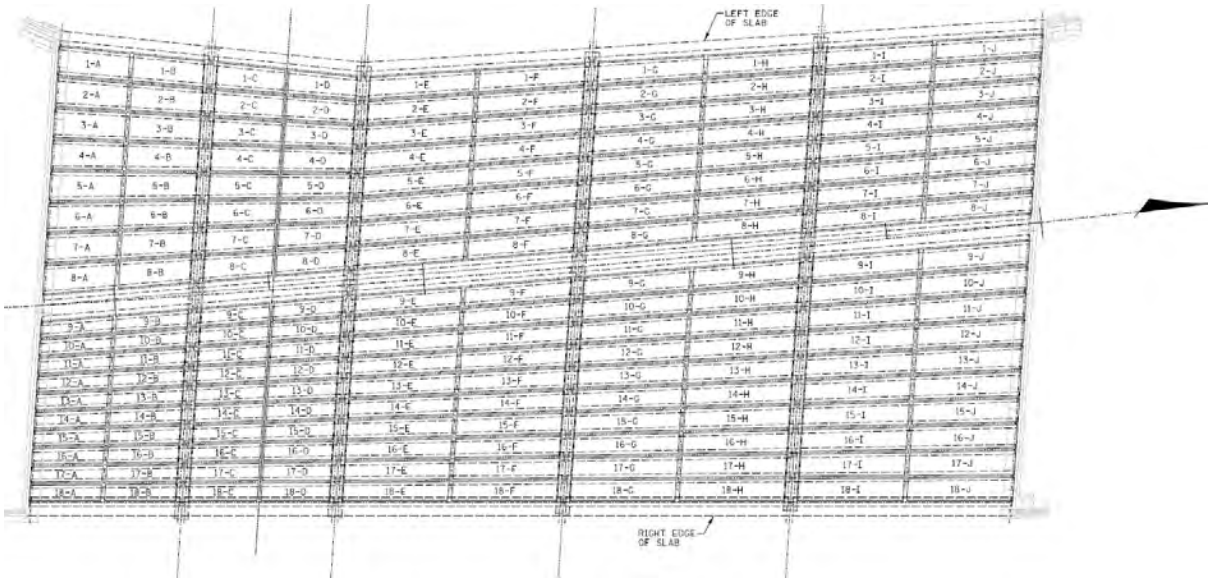

PANEL LAYOUT PLAN

The panels for all bridges were drawn to full size scale with all rebar included. This provided assurances that conflicts during the panel erection process would be lessened during the closure weekends - which reduced risk for the Contractor and the Department. The panels were dimensioned and labeled such that shop drawing preparation would be easily confirmed against the contract plans. Each of the 180 deck panels on the Oldham Street bridge had unique dimensions and corner angles.

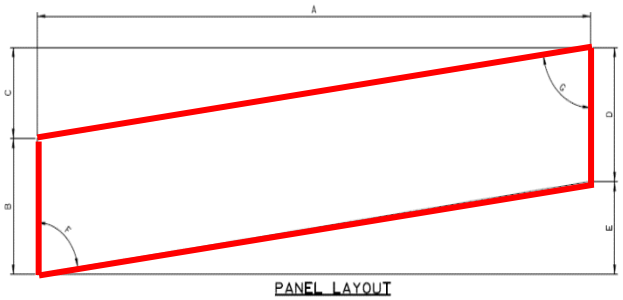

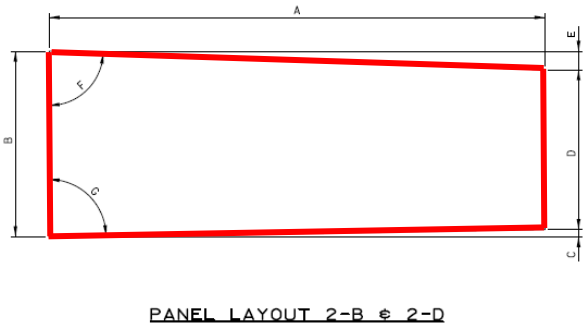

The closure pour material was specifically formulated for this project. Standard high strength, non-shrink grouts were not readily available in the quantities required. For the entire project, approximately 40,000 bags of this material would have been required and the production time would not have met the compressed schedule required by TDOT. The important mix parameters needed for this project include early strength gain, low chloride ion penetration, and exceptional bond strength. The final mix design provided 4000 psi in 4 hours (6,000 psi at 24 hours) with a one-hour pot life in the ready-mix truck which allowed 3-4 yard batches to be used on the project.

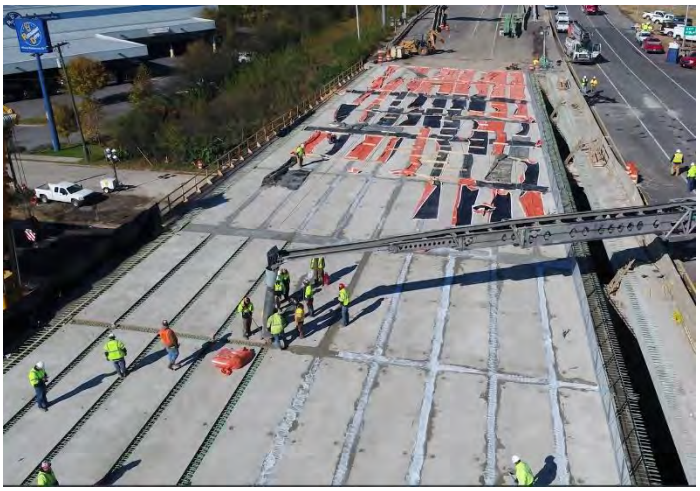

CONSTRUCTION LOGISTICS

An extensive construction erection plan had to be developed to meet the requirements of the CSXT Railroad. These plans included location of all cranes and identified unloading zones for all precast elements. The railroad also required crane capacity to be 150% of the actual rigged load weight. These requirements added to the complexity of the project.

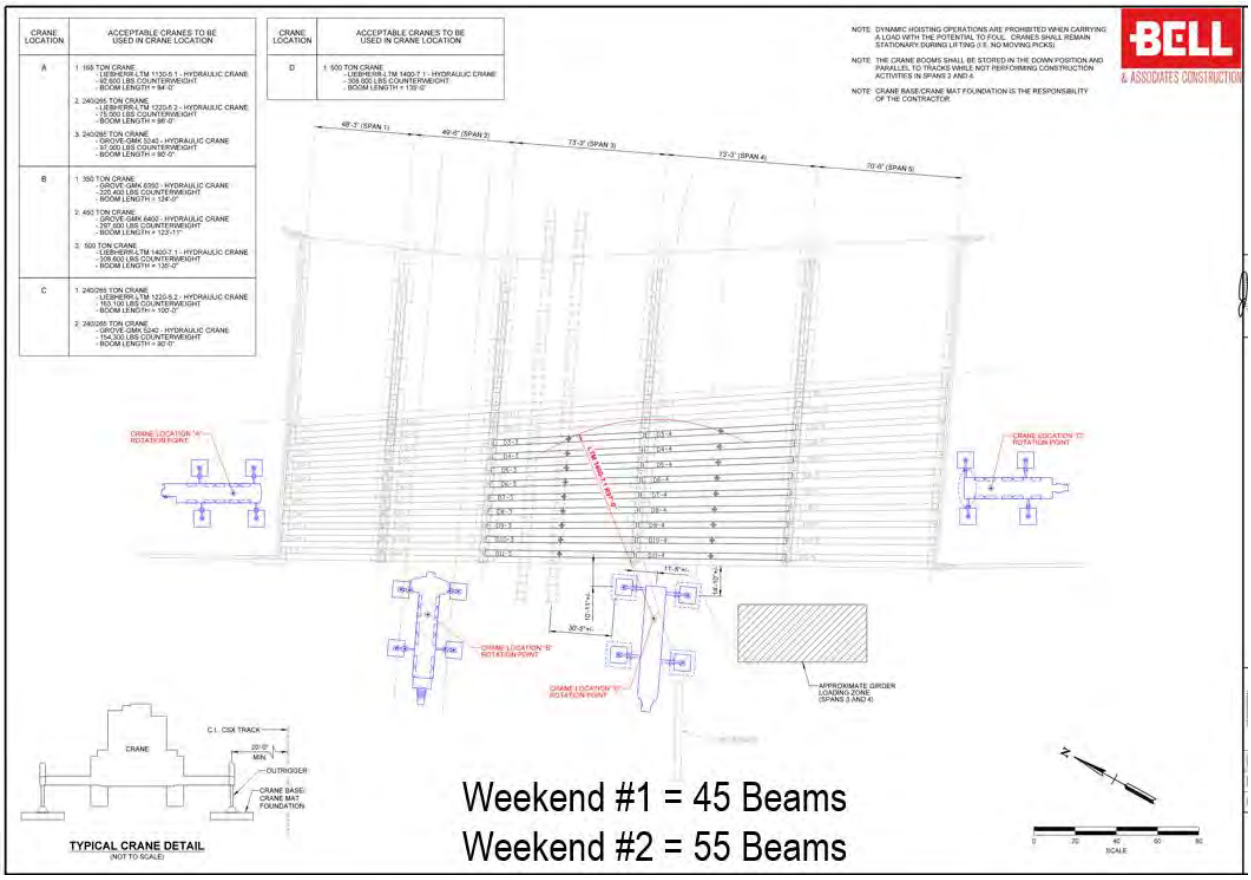

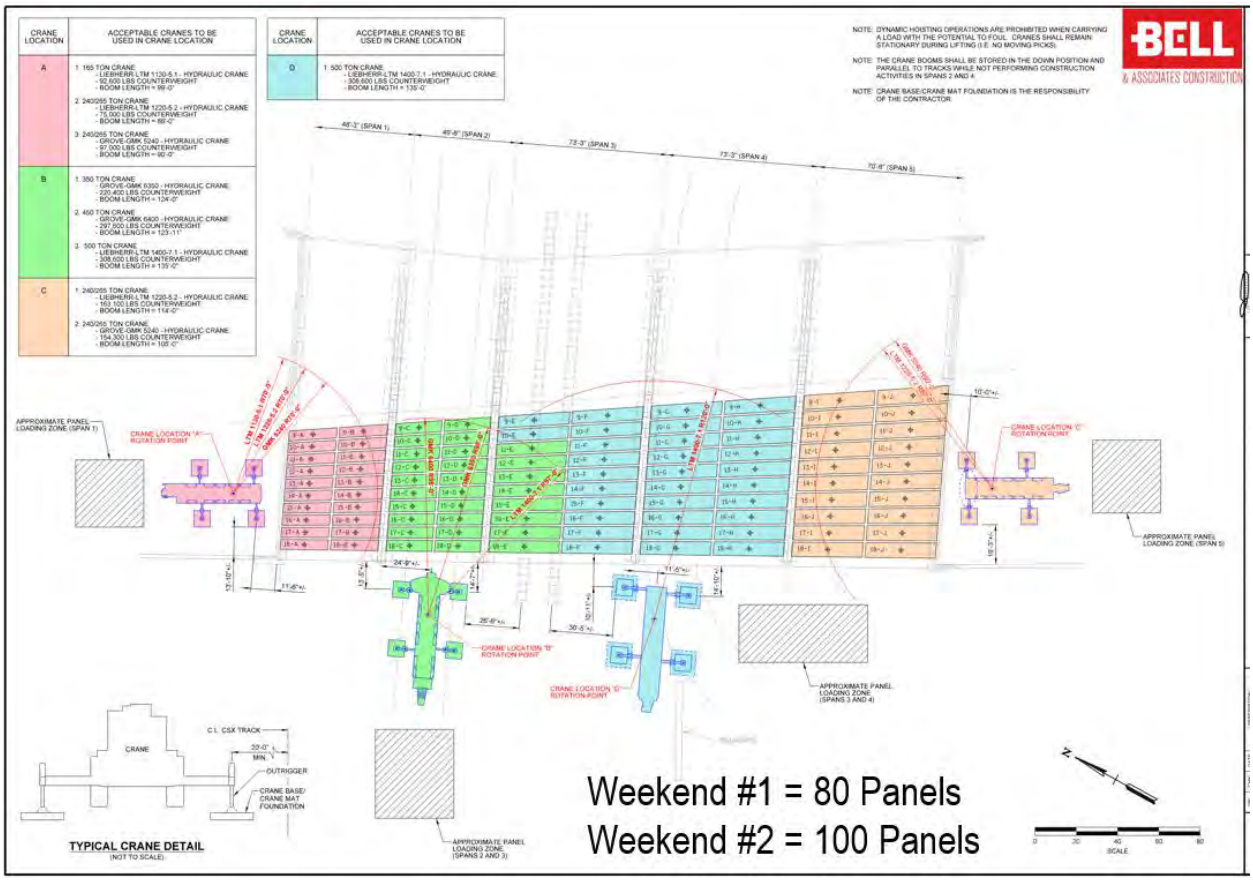

Crane operations were required to cease any time a train had to pass through the construction site. This required that the crane not hold any load that would be in line with the path of the train tracks. This requirement added approximately eight hours to the contractor's schedule as 26 trains was the normal rail traffic in this corridor.

The contractor used a color-coding scheme to make sure the correct beams and panels arrived at the crane in the right sequence. Workers in the marshalling yard and at the work site were in constant communication to keep the constant flow of trucks to the cranes.

To aid in the movement of the precast elements, the design engineer developed a lifting lug configuration and spacing for all elements that allowed the contractor to use the same spreader beam and rigging for all precast elements. The engineer evaluated the full depth panel stresses with the placement of the lifting lugs to confirm that no additional detrimental stresses would be transferred to the panels. This was key since every panel was a unique dimension and the lifting lugs needed to be placed to keep the panels level during the lifting process.

For the second Oldham Street bridge, there were 55 beams and 100 panels to install during the weekend closure period. Each element required a separate trailer for delivery either due to the element weight or overall dimensions. This logistical challenge required the contractor to stage elements in different locations so delivery vehicles could have dedicated routes to each crane location. It also required extra cranes on the project site to load the various trailers since staging areas were limited in the congested urban environment. The contractor developed different routes for each crane location that included running on roads that were open to local traffic. The movement of the trucks was aided using local law

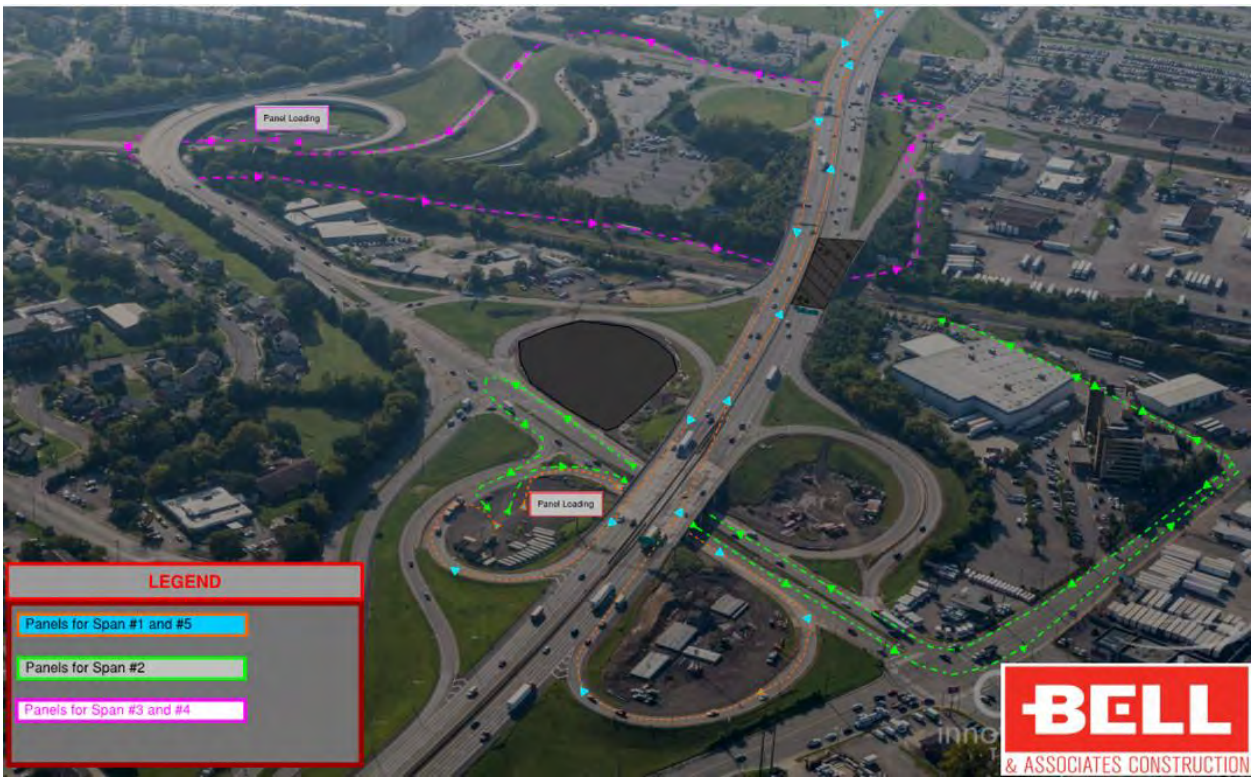

enforcement at key intersections. During all the installation timeframes, traffic was able to move without major congestion delays for the trucks or local traffic.

CONCLUSION

The Tennessee Department of Transportation embraces Accelerated Bridge Construction to successfully deliver projects and lessen traffic impacts to the traveling public. Various ABC projects have been completed by numerous contractors such that ABC routine - and even complex projects can be delivered using traditional project delivery methods. For complex projects, such as the I-24 Fast 4 project, close coordination between the Department and the Contractor along with detailed, well-engineering plans can yield an innovative project with lower overall risk to both TDOT and the Contractor.

The goal of ABC projects for TDOT is to minimize impacts to the traveling public and provide structures with an extended service life. Continued improvements in ABC project delivery in Tennessee and the strong performance documented by the entire project team are reflected in the success of the I-24 Fast 4 project.

ABC REPLACEMENT OF CSX BRIDGE OVER THE CAHABA RIVER

Amrithraj Anand, E.I.T., Heath & Lineback Engineers, Inc., (770)424-1668, aanand@heath-lineback.com
John Heath, P.E., Heath & Lineback Engineers, Inc., (770)424-1668, jheath@heath-lineback.com
Brian Adams, P.E., Heath & Lineback Engineers, Inc., (770)424-1668, badams@heath-lineback.com

ABSTRACT

A unique accelerated bridge construction approach was employed to replace the CSX Railroad Bridge over the scenic and pristine Cahaba River in Elvira, AL. The existing, original three-span structure designed in 1907 with an 80'-180'-80' span arrangement consisted of plate-girder end spans and a 40'-6" deep through truss for the main span was replaced with three new deck plate girder spans using an ABC approach that involved both longitudinal and transverse slides. The project team utilized state of the art equipment and design methodologies, ranging from Self-Propelled Modular Transporters (SPMTs), self-climbing towers and drone lidar scanning to comprehensive finite element modeling, staged construction analyses and 3D modeling, to carefully study and devise a replacement and demolition procedure. Although unexpected site conditions, including two rain events and a storm with 70-mph winds, challenged the replacement schedule, the rail line was opened 96 hours after initial closure. This paper describes the development and execution of the complex roll-in replacement of the railroad bridge with focus on the construction engineering.

PROJECT BACKGROUND

In 2016, CSX made the decision to replace their bridge over the Cahaba River near the city of Elvira, AL. The bridge is located on the main CSX freight rail line connecting Birmingham and Montgomery. At the bridge site, the rail track and bridge are aligned essentially North-South, and the bridge crosses the Cahaba River immediately downstream of the confluence with Buck Creek. The river valley is approximately 60 ft. deep. The river is usually only a few feet deep but rises quickly during rain events. There is exposed rock near the bridge. The site is constrained by private woodland and is only accessible via CSX Right of Way (R/W). The Cahaba River is the longest substantially free-flowing river in Alabama and is among the most scenic and biologically diverse rivers in the United States. It is closely watched and preserved by the Cahaba River Society.

Figure 1: Original bridge designed in 1907

The existing bridge was a 111-year-old, 3-span structure designed for two tracks, each offset 6 ft. 6 in from the centerline of the bridge. The two short end spans were comprised of three simply supported built-up plate girders with a span length of 80 ft. The main span was a 180 ft. through truss bridge with a maximum depth of 40 ft. 6 in. CSX operates the freight line as single track in the vicinity of the bridge.

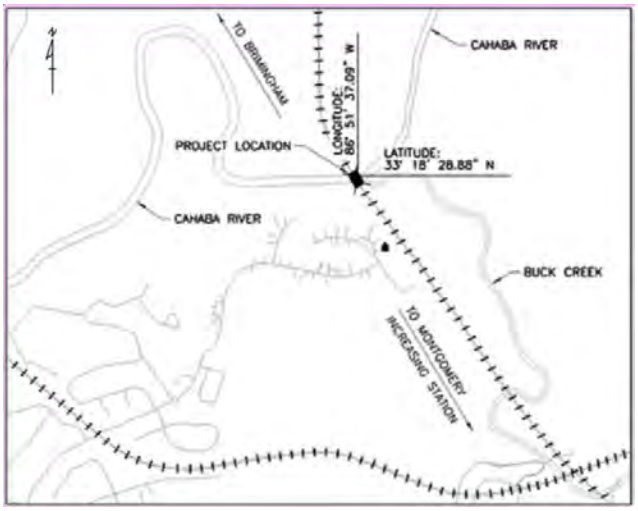

Figure 2: Project Location

CSX had determined the structure was at the end of its service life and should be replaced. TranSystems Corp. was commissioned to design a replacement structure. The replacement design was a new superstructure to be built upon the existing piers and abutments that would be re-used in the replacement bridge. The superstructure was designed as three simply supported spans (80 ft.- 180 ft.- 80 ft.) of welded plate girder supporting a single track. The new spans were designed to be centered on the existing operational track requiring a 6 ft. 6 in. lateral shift of the existing bridge centerline.

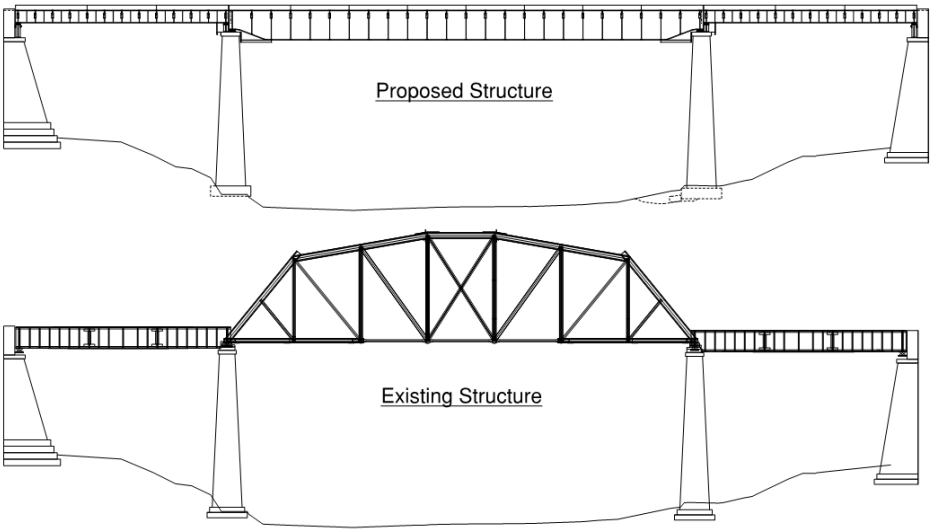

Figure 3: Elevation of proposed and existing structures

The construction documents included a requirement that temporary construction impacts to the river and its banks be minimized and established a 56-hour track closure period for demolition and replacement. The construction documents also required all construction access to be along the Railroad R/W with a nominal construction easement near the bridge site.

CONCEPT DEVELOPMENT

Brasfield & Gorrie General Contractors (B&G) proposed an innovative approach to replace the main span that involved rolling in the new span inside the envelope of the existing truss, using self-climbing towers to support both the new span and the truss, cutting the ends of the truss off, laterally sliding into alignment and lowering the new span into place. This low impact method utilizing only two lines of shoring and allowing the replacement to be done in the given time frame, won them the project. B&G retained Heath and Lineback Engineers, Inc. (H&L) as their designer and selected Burkhalter as the jack-up shoring, heavy hauling and sliding equipment subcontractor.

The replacement plan was:

Ahead of the 56-Hour Closure Window and under train traffic:

1. Build the new superstructure spans complete in lay down areas adjacent to the track area behind the abutments.
2. Modify the truss as necessary for the staged construction/demolition/removal.
3. Install, but do not engage, self-climbing shoring at the second nodal points from the ends under the new struts.

During the 56-Hour Closure Window:

1. Remove and replace End Span 3 using cranes placed near the bridge end.
2. Roll in the new Span 2 superstructure into the existing through truss span from the north side over Span 1.
3. Engage the jack-up shoring to support the new and old span 2 on the shoring.
4. Remove and replace End Span 1 using cranes placed near the bridge end.
5. Cut out Truss Panels 1 and 7 and laterally slide the new Span 2 into position.
6. Lower the old truss after and the new span until the new span engages the new bearings.
7. Remove the top bracing of the old truss and lower it further until the truss clears CSX operational limits.

After the 56-Hour Closure Window and under train traffic:

1. Complete lowering of the old truss and demolish.

Figure 4: New span staged inside the existing truss, transported using SPMTs

CSX awarded the project to B&G. B&G retained H&L as their construction engineer and Burkhalter Lifting, Rigging and Transport Professionals, (Burkhalter) was hired as a subcontractor to provide the self-climbing shoring, sliding and the heavy hauling services.

SCOPE OF CONSTRUCTION ENGINEERING

H&L was tasked with the role of “giving wings” to the innovative concept. All details of the roll-in, load transfer, modification to the truss for removal, analysis and strengthening for lateral stability of the truss

after bracing is removed and developing a procedure for the change out and demolition would be H&L's responsibility. The work included consideration of the geometrical constraints, capacities of the temporary structures under the various loading configurations (the new Span 2 weighed 1000K complete and the old truss weighed 900K complete), capacity of the permanent structures to withstand the temporary loads during the launch and installation, capacity of the cranes to support operations and the demolition/construction sequences.

H&L identified the following key design stages:

- Development of a roll-in system to transport the new bridge into the existing truss.
- Modifications to the truss for removal (addition of diagonal strut)
- Development of a Load Transfer Procedure
- Examination of truss stability during bracing removal
- Concrete footing design for the jack-up towers and development of the Demolition Plan

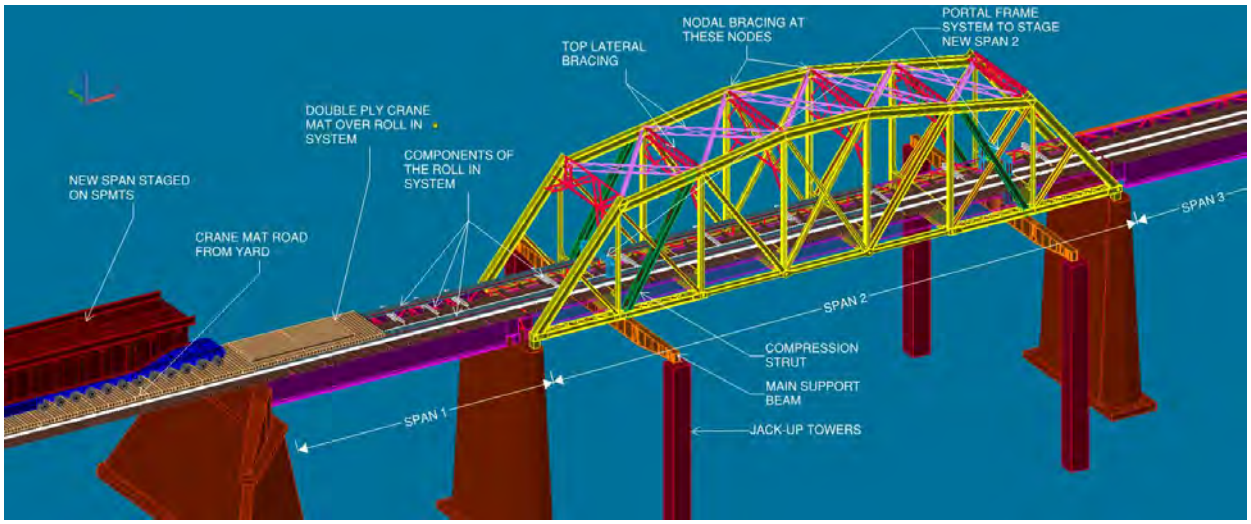

Figure 5: Components of the replacement scheme

H&L would also design all the critical crane picks and review Burkhalter's calculations for the Jack-up System. After the team completed detailed analysis of constructability, structural capacity and geometrical constraints, the original plan was refined as discussed herein.

DESIGN ISSUES AND SOLUTION

Development of Finite Element Model

A comprehensive finite element model was used to study the stability of the truss during bracing removal, to study the interaction between the new span and the existing bridge due to differential deflections during roll-in and to calculate forces on the truss chords during various stages of the bridge replacement.

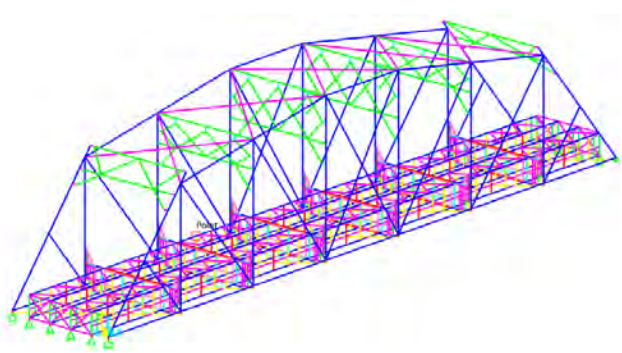

Figure 6: CSiBridge FEM model of the Truss

Analyses were performed on three-dimensional finite element models developed using CSiBridge 2019. Truss chord members and all top and bottom lateral bracing members were modeled as frame elements. The floor beam and stringers were modeled with shell elements for the webs and frame elements for the flange. Rigid links were used to create offsets cause by gusset plates to maintain member geometry. Member section geometry was carefully extracted from the exiting plans to create custom frame sections in CSiBridge using the section designer.

The truss chords and diagonal strut/tie members were lattice type built-up sections. A reduced bending stiffness for these members was calculated as studied by Duan et al. (1). Since stability was being studied, the stiffness parameters would need to be accurate. Hence, for members with lacing, a reduction factor was applied to the calculated Moment of Inertia where the lacing provides shear flow between flanges. Lacing weight is accounted for in the model through the application of mass modifiers to the frame members.

3D Model and Point Cloud

A 3D model of the bridge was created in AutoCAD to communicate designs more efficiently and to aid in conflict resolution of components. This model was created by extracting the centerline geometry from the finite element Analysis model and extruding the appropriate sections. The 3D model was then used to extract line templates for the final plans. B&G performed a drone lidar scan of the structure during early stages of planning. The point cloud generated by the lidar scan helped the design team rapidly verify existing plan dimensions and calculate clearances.

Roll-In System

The team examined all possibilities for the transverse positioning of the new Span 2 during the roll-in. It quickly became apparent that the span would have to be rolled in centered on the truss due to very tight clearances and to keep load distributions even on the approach span and the truss. It would then have to be translated (slid or rolled) sideways to its final position centered on the existing track.

Initially the plan was to roll the bridge in on several Hillman rollers using a hydraulic skid system. H&L quickly identified that the relative stiffness interaction of the new and old spans during roll-in was a concern that needed to be studied. The finite element model was used to capture the interaction of the truss and approach spans during roll-in. After analyzing the critical stages during the roll-in it was clear that the hard points developed at the piers and abutments would potentially cripple the Span 2 girders and a hydraulic jack system would be required to equally distribute loads over at least 10 rollers. B&G evaluated this option and after discussion with Burkhalter, elected to use Goldhofer SPMTs as the carrier during roll-in. The SPMTs provided multiple axles with hydraulic adjustments capable of protecting the new superstructure girders throughout the roll-in by ensuring equal axle loads.

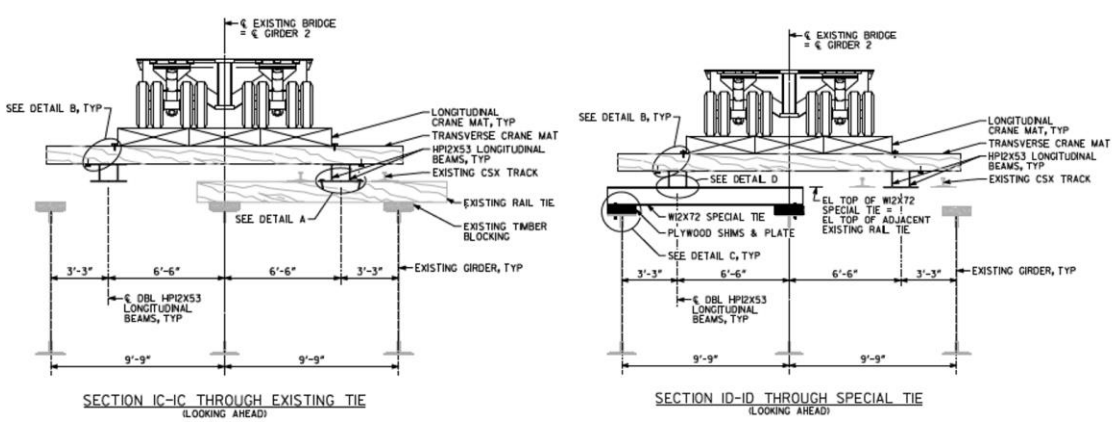

Figure 7: The roll-in system at the approach span

However, the SPMT system added loads and geometrical constraints that had to be considered. The SPMTs required approximately 3 ft. 6 in. of the available vertical clearance between the deck and the truss portals and a wide travel path. The SPMTs are heavy (57Kips/unit). H&L determined that the load demand on the approach span girders during roll-in was significant, and a method was needed to share the load to all three girders of the span. H&L developed a load distribution system hybrid steel beam/crane mat design that met the clearance constraints, provided adequate riding area for the SPMTs and distributed loads equally to the three approach girders and the four stringers on the truss. The system comprised of simply supported transverse spreader beams spanning two of the three main girders and special continuous longitudinal beams (built-up member fabricated from a pair of HP12x53's) which in turn support a double-ply timber crane matting.

Figure 8: The longitudinal built-up beams have been installed and other components are being flown into place

Compression Strut Design

The main span was a seven-panel Pratt Truss. In order to create clearance to lower the truss it was necessary to remove Panels 1 and 7 and temporarily support the truss at Panel Points 2 and 6. Therefore temporary compression struts needed to be added to the structure. In the early stages of concept development, the design team identified that the design of a practically constructible strut for the new load path would be a challenge. The existing steel, manufactured in the early 1900s, was not weldable, which meant the connections had to be bolted. Further, bolted connections were difficult due to the built-up sections containing rivets and an assortment of angles, channels and plates. The strut would also have to bridge the existing tension chord at the panel. Given the challenging constraints, it was clear that the strut could only carry the weight of the truss alone. The new bridge could not be placed on the truss during the lowering operation.

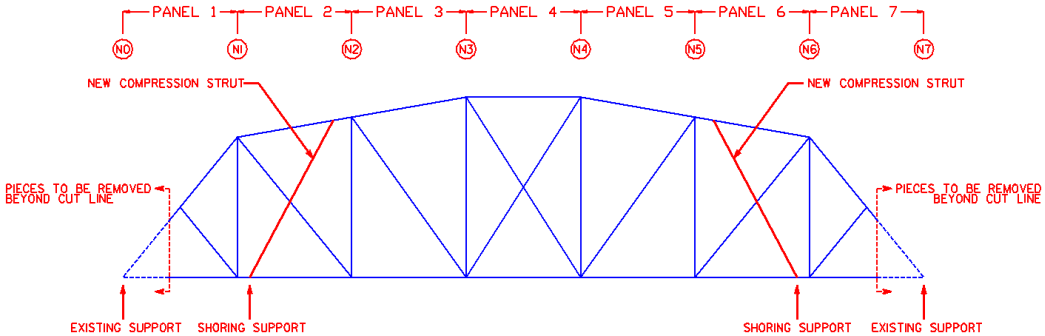

Figure 9: Schematic showing strut locations

The concept strut contained two heavy channel sections tied together by batten plates and wrapped around the tension chord. The top and bottom connections were heavily reinforced to prevent any local failures of the truss chords. The concept was detailed in a 3D model and a construction procedure was developed. The 3D model helped immensely in communicating the details and the construction sequence with the design team. B&G provided their input and agreed that the design was feasible. The final design was done in 2D plans using a template extracted from the 3D model. H&L provided detailed final drawings at a shop level for construction. The strut was later constructed to fit up with no issues.

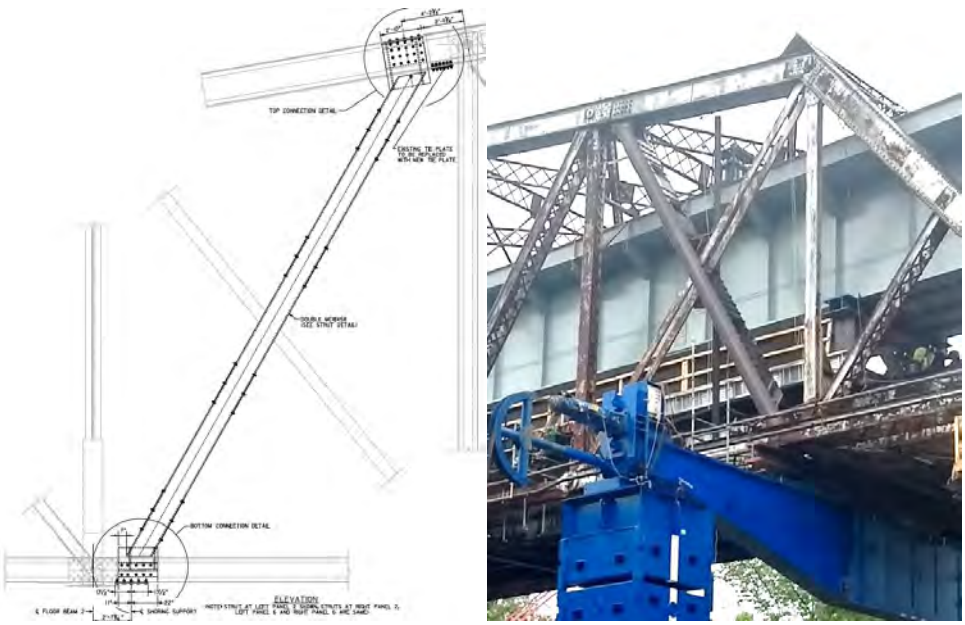

Figure 10 & 11: Final drawing of the strut & The strut as constructed on site

Load Transfer System – The Portal Frame

The need for the load transfer system that would carry the new bridge loads directly to the shoring system was twofold: 1) the temporary compression struts could only carry the weight of the existing truss; therefore, the weight of the new superstructure had to be separately transferred to the jack-up system. 2) The SPMTs had to be driven out once the new span had been delivered into place.

Figure 12: The new bridge has been staged on the portal frames and the SPMTs have been driven out

A “portal frame” system was developed that would tie into the roll-in system and be supported on the shoring. The tie-in to the roll-in system was critical for stability. Using cables for stability was not feasible

as the differential deflections during load transfer would make it impossible to keep the cables tensioned at all times. After roll in, the frame served as a base upon which the SPMTs would set the new bridge. The SPMTs would then drive out of the portal opening.

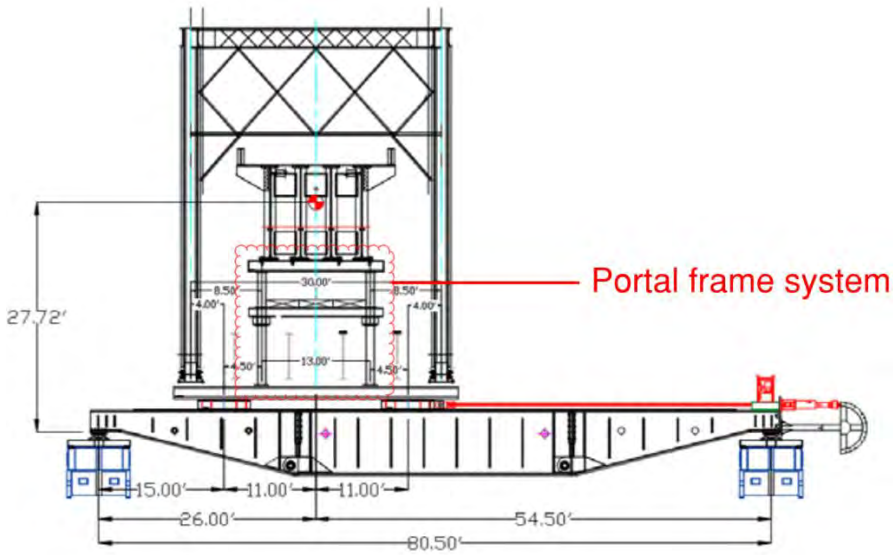

Figure 13: The portal frame system

The tie-in into the shoring system provided slight complications. The portal frame columns were connected and transferred load through the continuous longitudinal beams. When the load was transferred through these columns, the truss would bounce back up as the load was relieved off the truss and transferred to the shoring. But the “spaghetti” longitudinal beams of the roll-in system on the truss would remain pinched at the column-beam connection. Analysis of the truss revealed that if this load transfer was done in one action, it would cripple the roll-in beams as shown in Figure 14.

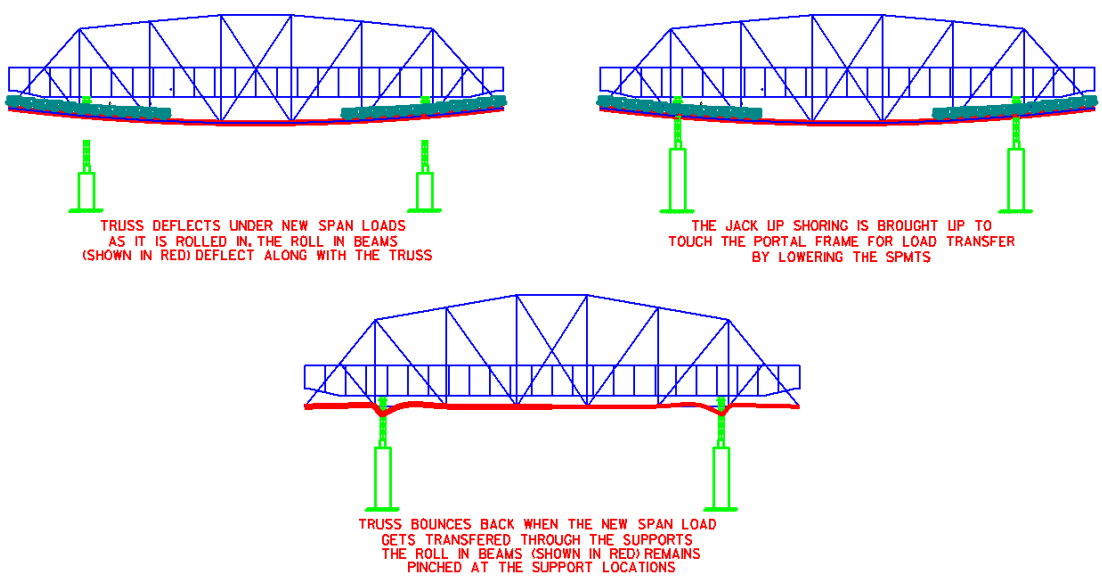

Figure 14: The theoretical crippling of longitudinal beams under the absence of a load transfer procedure

A detailed load transfer procedure with calculated theoretical deflections using the FEM Model was hence developed to solve this issue. This involved alternating rounds of lowering the SPMTs and raising the shoring tower heads. When the SPMTs lower, an amount of load gets transferred from the truss to the

shoring towers, causing the truss to bounce up and introduce bending in the roll-in system. In the next step, the shoring towers are then raised to correct for this bounce back and relieve any load in the roll-in system. This process was continued until all the load was transferred to the shoring tower system.

Truss Stability

To lower the truss below the new bridge, all the top lateral and portal bracing of the truss would need to be removed. This leaves the top compression chord unbraced over a length of approximately 150 ft. Further, review of the plans revealed that the nodes of the truss were true pins with no moment continuity. This meant that without modifications, the chord would buckle out of plane like a “chain link” under load. Hence modifications to the truss were carried out to allow the lateral bracing to be taken out. To provide moment continuity, plates were designed to be added to the top of the top chord at nodes, and a brace was designed to improve the flagpole bracing action of the posts.

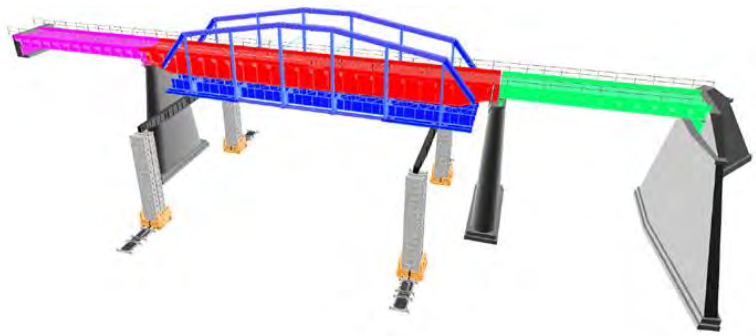

Figure 15: Lowering stage of the concept replacement procedure.

The 3D FEM model was used to conduct a stability study. A bracing removal procedure was developed to remove the bracing in stages: 1) All the portal bracing was removed and all the top lateral bracing was removed except the one in the middle panel. 2) The truss + new span 2 system was lowered until new span 2 engaged its bearings.3) the truss was lowered further until the new bridge just touched the lateral bracing in the middle bay. 4) Temporary K-Braces were added under the new bridge. 5) The middle bay lateral bracing was removed and the truss was lowered all the way for demolition. The sequence was developed via Eigenvalue buckling analysis on the FEM model for each stage of the procedure. The bracing and the stability modification would be designed for accidental side loads during the slide and wind loads.

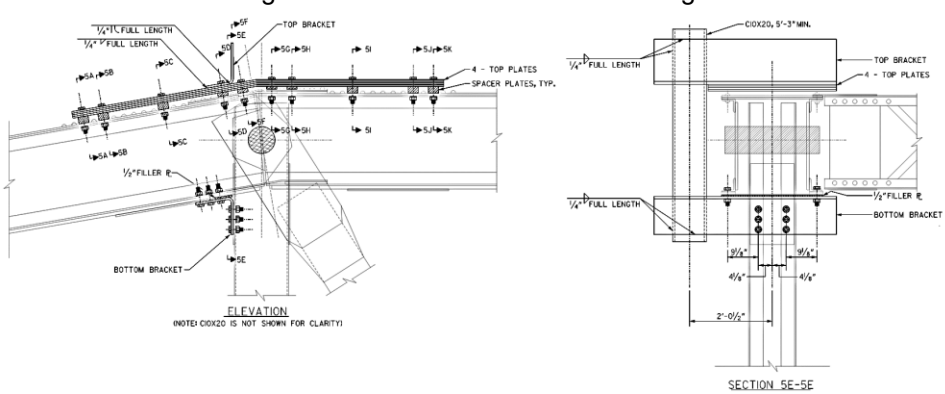

Figure 16: Elevation and Section of the node reinforcement

Truss Demolition

After the truss was lowered under the new span, it had to be removed and demolished. Limited access to the truss sitting in the middle of the river valley made it difficult for the cranes to pick the trusses whole. The truss therefore needed to be picked in pieces and had to be supported at all panel points to relive chords off the load so that they could be cut. To reduce impact to the river while adding supports in the river bed, a scheme was developed based on using rip rap filled bags placed in the river to provide an even base for

the shoring stands with no disturbance to the rock. The rip rap bags could be easily removed after demolition without any disturbance to the river bed. During discussions, Burkhalter identified the availability of pipe stands from a different project. H&L incorporated these stands and designed a braced shoring system for the truss to be supported on. The base of the towers were designed using a combination of crane mats and HP sections to distribute the loads.

The supports utilized lean-on bracing for ease of construction and to accommodate any support settlement. As seen on Figure 17, only the middle bay was designed to have diagonals and the outside bays would transfer the shear to the middle diagonals. This would also help accommodate the inevitable differential settlement between the tower rows as the outside bays could move vertically. To ensure that no towers were overloaded, a load transfer procedure was developed using a combination of shimming in stages and load monitoring on the jack-up towers. This was accompanied by a detailed truss cutting procedure that allowed the stiff truss to “unravel” onto the stands. The individual cut pieces were light enough for the cranes to reach from their stations.

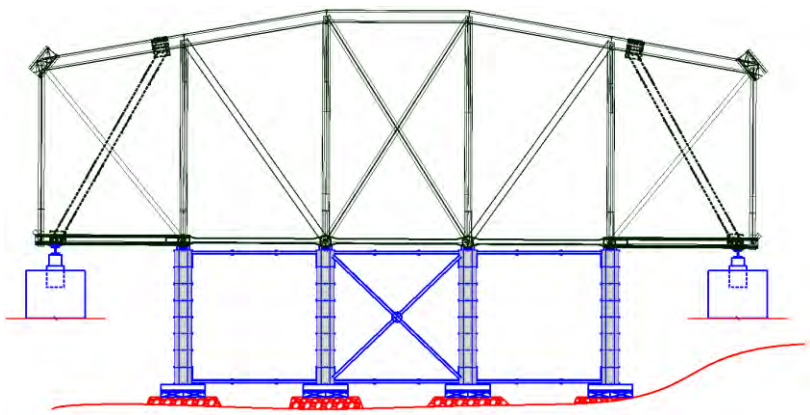

Figure 17 Shoring system for truss demolition

CONCLUSION

The unique ABC approach employed in this project presents a viable solution for the replacement of ageing steel truss bridges many of which are railroad bridges that would require replacements to be carried out in short periods.

Figure 18: New bridge after changeout

REFERENCES

1. Duan, L. & Reno, M. & Uang, Chia-Ming. (2002). *Effect of compound buckling on compression strength of built-up members*. Engineering Journal. 39. 30-37.

RAPID REPLACEMENT OF TWO WASHINGTON DOT STREAM CROSSING BRIDGES USING PREFABRICATED ARCH BRIDGE SYSTEMS

Michael G. Carfagno, P.E., Contech Engineered Solutions, (513) 645-7535, mcarfagno@conteches.com
Kali Dickerson, P.E., Stantec, (425) 289-7348, Kali.Dickerson@stantec.com

ABSTRACT

The Washington Department of Transportation (WSDOT) used different approaches to solve challenges faced on two stream crossing bridge replacement projects in 2018. Using the same contractor for both projects, the same prefabricated bridge system was implemented to successfully replace both bridges in record times. To improve fish passage in the Little Pilchuck Creek under State Route 92 in Snohomish County, Washington, WSDOT engineers proposed replacing a 12'x 6' concrete box culvert with one of three alternate precast concrete structures, each one detailed in the bid drawings in a conventional design-bid-build project. To minimize impacts to the 12,000 drivers who travel SR 92 every day, the contract only allowed for two weekend closures and one two-week continuous closure of SR 92 with liquidated damages accruing if construction extended past the two-week closure. The successful low bidder, as well as the majority of the other bidders, chose the 66'-0" span twin-leaf precast arch alternate which allowed the use of precast strip foundations in lieu of the pedestal foundations required by the other two alternatives. Modular block MSE walls were used as headwalls and wingwalls to complete the bridge structure. Although the contractor ran over the two-week closure by a few days, due to some unforeseen delays during construction, the project was deemed a success by all parties. On the second project, WSDOT planned to replace the existing 3-span, 150-foot-long Wildcat Creek Bridge, on a remote section of US 12 east of White Pass in Mount Rainier National Park, with a new pre-stressed concrete girder bridge using the Design-Build delivery method. Using Design-Build allowed the contractor to be innovative and develop a proposal that used a 54'-0" span twin-leaf precast concrete arch buried structure with precast foundations and MSE retaining walls with a short-term detour to minimize traffic impacts. This scheme reduced the construction time and traffic impact from over three months utilizing the pre-stressed girder option to just 17 days. The precast arch structure also resulted in a savings of $2 million over the pre-stressed girder option. Other benefits from the buried bridge structure were the avoidance of pile-driving, as well as a reduced footprint of the bridge structure and limited tree removal. This paper will introduce the concept of twin-leaf precast arch structures, how they can be a strong alternative to conventional bridges and will discuss these two WSDOT Accelerated Bridge Construction projects highlighting the construction sequencing, challenges faced, and the lessons learned.

INTRODUCTION

Multi-leaf precast arch structures can be economical substitutes for short to medium span conventional bridges. The Washington Department of Transportation took advantage of twin-leaf precast arch structures using two different delivery methods to solve challenges faced on two stream crossing bridge replacement projects in 2018. Both projects were determined to be candidates for using accelerated bridge construction techniques to reduce impacts to traffic and as such twin-leaf precast arch structures ended up being the chosen structure for both projects. This paper will provide details of the design and construction of both bridge replacement projects illustrating how twin-leaf precast arch structures can reduce construction time significantly over conventional bridges.

MULTI-LEAF PRECAST ARCHES

Multi-leaf precast arches are structures that have been split into 2 or 3 pieces in order to simplify shipping to the jobsite. A number of different systems exist in both twin and triple leaf configurations. The main differences between the systems are the number of segments that the arch is broken up into and how the joints between segments are detailed. Some systems treat and detail the joint as a pin connection while others make the connection fixed with full moment continuity. The BEBO bridge systems that were used

on both of the WSDOT projects in this paper were twin-leaf structures that have fixed connections at the joint between segments at the crown of the arch. The BEBO Bridge System was developed in Switzerland in the mid 1960's.

Segments of multi-leaf precast arch structures are shipped to the jobsite on their sides on flatbed trailers. The most typical method of erecting twin leaf arch structures is by use of two double drum cranes that allow the arch units to be lifted off the flatbed trailers and then rotated in the air into the setting position and then moved into their final resting location (Figure 1). If two cranes are not used, then a shoring system must be used to hold the first half of the arch in place when the crane is moving the second piece into position.

Figure 1: Twin-leaf arch erection

US 12 WILDCAT CREEK BRIDGE REPLACEMENT

WSDOT utilized a fast-tracked design-build project approach to replace the aging 150-foot span timber and steel girder Wildcat Creek Bridge under a tight construction window—seven months after project award. Located on US Highway 12, one of only three routes across Washington's Cascade Mountains, the bridge is a critical piece of infrastructure for an important freight route. The bridge is located in the WSDOT south central region, just east of white pass, and services approximately 2100 vehicles per day.

Existing Bridge – Deteriorated Condition

The original Wildcat Creek Bridge, constructed in 1936, was showing significant signs of deterioration due to age and normal wear. The bridge was comprised of a 35-foot main span and three 19-foot side spans on either side of the main span. The main span was composed of steel girders with a cast-in-place concrete deck and supported by rigid concrete frame piers. The side spans were each composed of timber girders and concrete deck and supported by braced timber piers.

The bridge was showing significant signs of deterioration and constant repairs were required (Figure 2). The bridge steel elements were accumulating rust. The bridge deck was experiencing several significant deterioration locations, some even as large as 3-feet by 3-feet and completely penetrated through the 6-inch thick deck. The concrete piers exhibited significant spalling and excessive exposed rebar.

Figure 2: Existing Bridge Deterioration

WSDOT Preliminary Design

WSDOT's preliminary design included a standard girder bridge made of precast, prestressed concrete girders, cast-in-place (CIP) deck, and CIP concrete barriers (Figure 3). The preliminary design increased the curb-to-curb width by 3-ft, and utilized a single bridge structure, spanning the full 150-foot crossing.

The preliminary design also proposed a temporary detour bridge to be used while the permanent structure was being constructed.

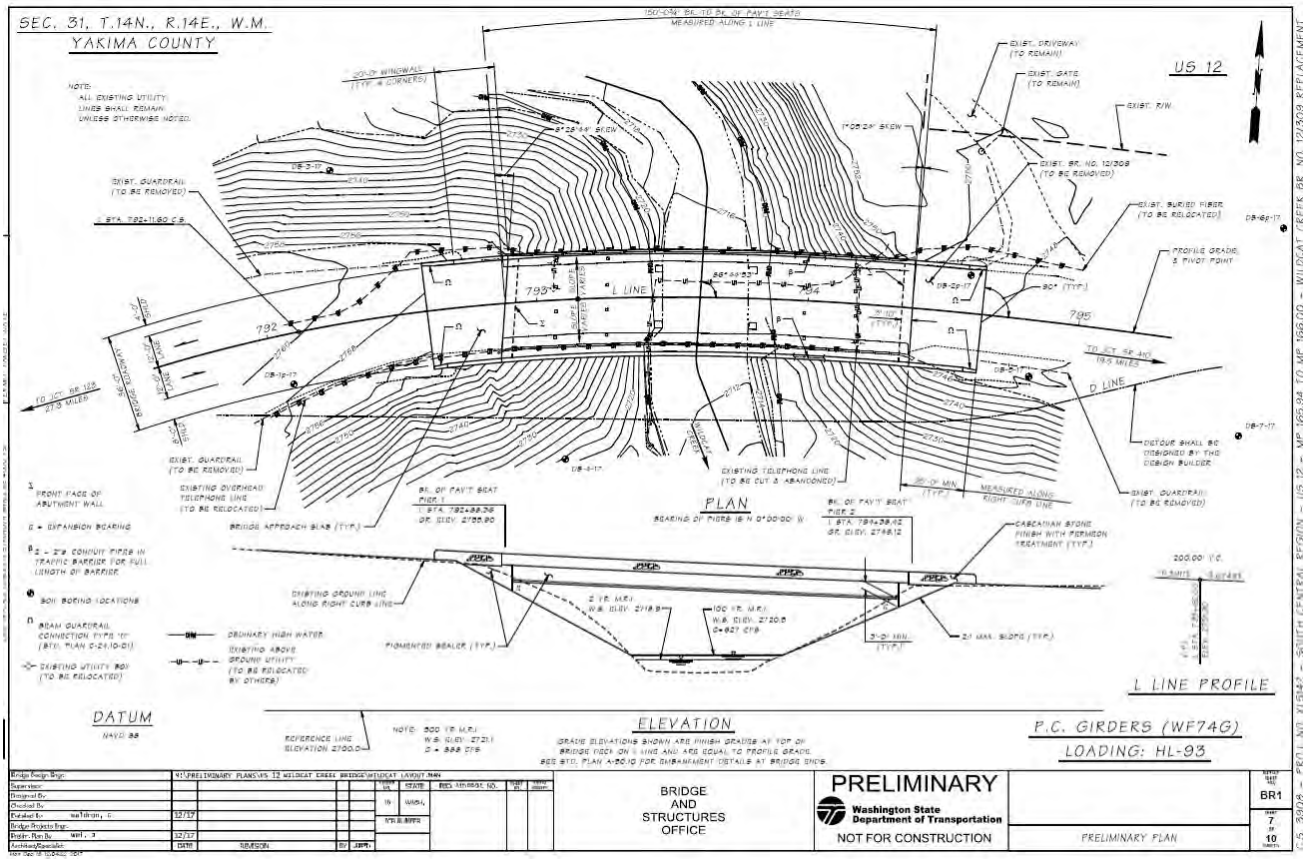

Figure 3: WSDOT Preliminary Design

In addition to the significant added cost of building two bridges (instead of one), this temporary alignment had significantly more environmental impacts than the DB team's proposed solution. By eliminating the need for a second, temporary bridge, the team was able to reduce the number of trees removed from the project site.

Design Build method of delivery
WSDOT obtained accelerated funding from Connecting Washington Transportation Funding Package for the Wildcat bridge replacement. Bridge replacements fall under the Highway Preservation Budget, which addresses the most critical needs for bridges and allows WSDOT the option to use expedited contracting for emergency protection of highways. Therefore, the project needed to be delivered very quickly. The agency budgeted $12 million and four to five months of construction. The DB team developed effective design and construction methods to accelerate the bridge replacement timeline while reducing impacts to the environment, traffic, and the surrounding community, all primary goals of the project. Overall project goals included,

- Minimizing Impacts – design and construction methods that accelerate structure replacement and reduce impacts to the environment and traffic.
- Collaboration – collaborate effectively to identify issues early in the schedule and efficiently develop positive solutions.
- Environmental Compliance – Meet or exceed environmental requirements with no permit violations.

The design-build delivery method was used for this project to allow for design and construction innovations and reduce the overall cost and schedule for the project. Alternative Technical Concepts (ATCs) were utilized by the DB teams to propose deviations from the WSDOT basic configuration. The project was awarded and delivered on an accelerated schedule, with the bridge opening to traffic only 6-months after notice to proceed!

Project Timeline:
- Qualifications – less than one month
- Proposal – two months
- Notice to Proceed – two months after Proposal
- Bridge Open to Traffic – six months after NTP

Design Build Team
The winning design-build team was composed of the following firms:
Owner – WSDOT
Contractor – Graham
Lead Designer – Stantec
Arch Designer – Contech Engineered Solutions
Wall Designer – Reinforced Earth

The multi-discipline design-build design team conducted an alternatives analysis and developed an innovative solution utilizing a 54-foot pre-cast arch buried bridge structure. Stantec also eliminated a temporary detour bridge in favor of a full road closure. The design-build team generated several ideas for ATCs, but eventually only decided to use one.

Maintenance of Traffic
Through the approval of an ATC, the design-build team was able to eliminate the temporary detour bridge in favor of a full road closure. The team worked with local authorities and stakeholders to develop a detour based on a previously used route familiar to the public. The detour route used added an additional 20 minutes around the bridge site (Figure 4). The full closure lasted for 17 continuous calendar days, and work was conducted during the allowable in-water work window.

Prior to full closure of the bridge, the DB team performed a full inspection of the whole detour route and made repairs along the route as necessary before using. Additional inspection and repairs were made along the detour route after the bridge was opened to traffic. This project approach reduced traffic impacts from three months to just seventeen days.

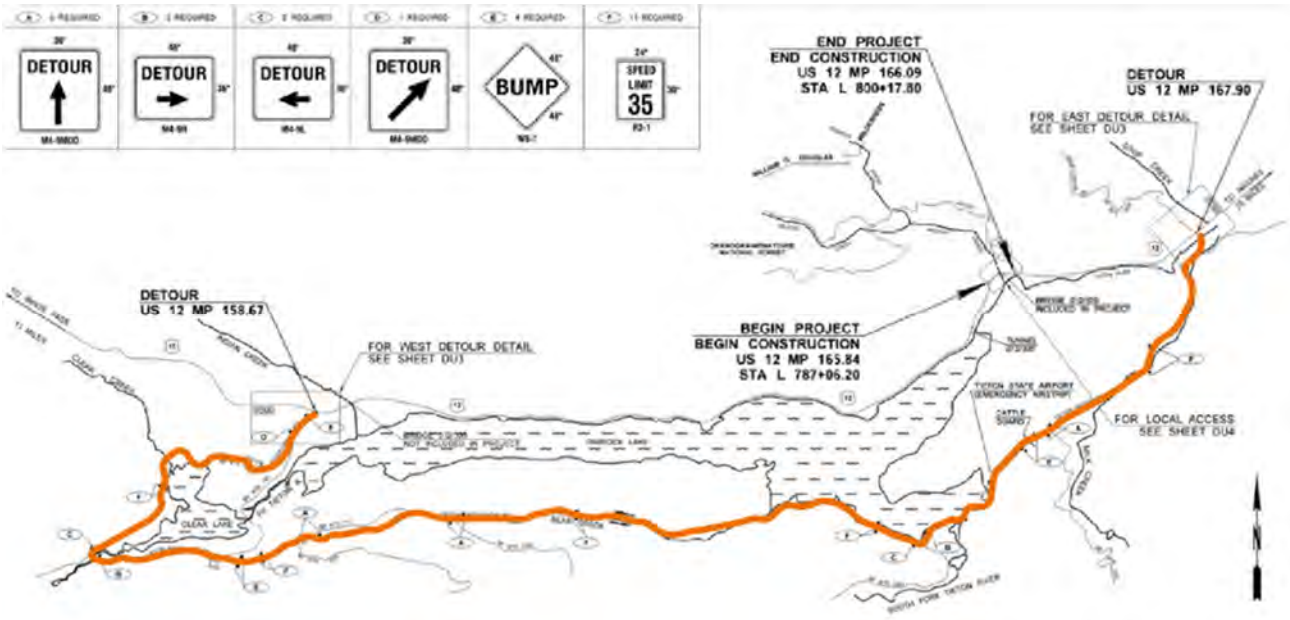

Figure 4: Detour Route

Utilities
The project included close coordination with utility owners including AT&T for both temporary and permanent locations of sensitive fiber optic lines and Rimrock Water Association (RWA) for potable water and fire suppression lines to confirm that utility relocations occurred on time to keep the project on schedule. The team worked with AT&T to develop conduit locations and collaborated with RWA, assisting with concept development for the use, size, and location of pipe sleeves.

The design team was able to avoid underground telephone cable and sewer lines near the east abutment of the bridge. Several utility lines were able to be abandoned, including a powerline for RWA, a Rimrock store area cable and an above ground telephone line owned by WSDOT.

Construction Schedule
The installation logistics for this remote project location, on a tight timeframe, were quite complex. Through careful planning and sequencing, all the parts and pieces were brought together in the correct progression.

Through an approved ATC, the DB team was able to eliminate the temporary detour bridge originally proposed in favor of a full road closure. To determine how long the road would need to be closed, the team built a highly detailed, hour-by-hour schedule that penciled out to 17 days of round-the-clock construction. The team worked with Yakima County and other stakeholders to develop a detour based on a previously used route familiar to the public. By reducing construction to 17 days, the team cut inconvenience to the traveling public, residents, and local businesses by 80% and eliminated the safety concerns and expense of managing live traffic adjacent to the project. Construction was completed using two shifts per day, seven days per week.

US 12 was closed on the evening of October 5th, 2018 and reopened to traffic on October 22nd, 2018—ahead of schedule. The new arch structure adds stability, maintains natural hydrology and fish habitat, and compliments local and regional aesthetics.

BEBO Twin Leaf Arch Buried Bridge
The design build team selected a BEBO twin-leaf C54' span x 26'-4" rise structure with 13'-0" of soil cover as the best fit structure for the site (Figures 5 & 6). The bridge consisted of eight (8), six foot wide arch rings with an overall width of 48'-0". The maximum height of soil cover over the arch is 13'-0" with a live load of AASHTO HL-93.

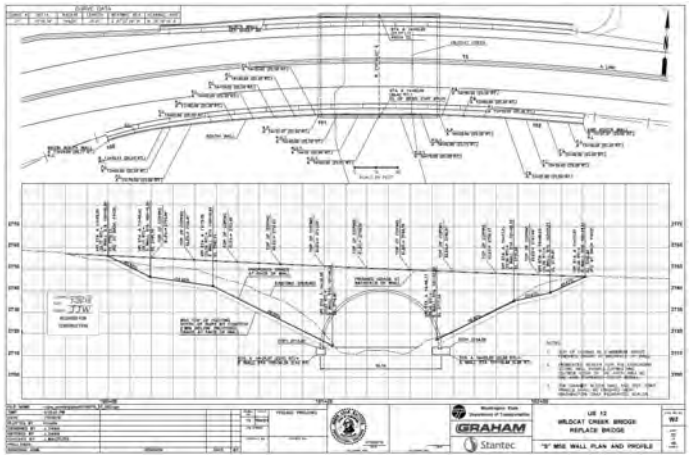

Figure 5: Wildcat Creek Plan and Profile

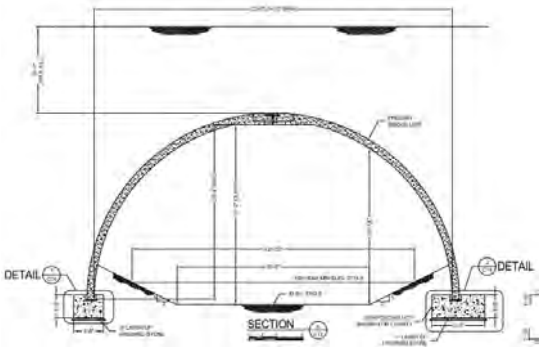

Figure 6: Typical Cross Section

Precast Foundations and Closure Pour

Precast strip foundations were used in order to speed construction (Figure 7). Cast-in-place concrete closure pours between precast foundation segments were used to provide continuity to the foundation. Based on the varying soil conditions the strip foundations were different widths under each arch leg. The precast foundations were set on a 4" layer of crushed stone and had longitudinal reinforcing bars extending from each precast foundation segment to provide longitudinal continuity. Once the foundation segments were set transverse reinforcing bars were tied in and then high-early strength concrete was cast in the closure pours(Figure 8). A minimum compressive strength of 4000 psi was required before the arch sections could be set on the foundations.

Figure 7: Precast Foundations Set in Place

Figure 8: Foundation Closure Pours

Arch Unit Installation

Once the foundation closure pours had cured overnight and reached the required 4000 psi compressive strength the arch units were installed. Cranes on each side of the bridge structure at the existing roadway elevation were used to set the arch units. The arch units are set on top of a 1" nominal stack of either Masonite or plastic shims that are set on top of the keyway that was formed into the top of the strip foundations. Hardwood wedges are used to keep the arch sections from spreading and to align the arches. There is a tongue and groove joint at the middle or "bullnose" section of each arch ring to provide alignment during arch erection (Figure 9). Once an arch ring (2 arch halves) are set, a curved bolt is installed as a safety precaution to make sure the arch halves do not separate. Each arch segment has reinforcing bars extending out at mid-span into the crown joint so that splice bars (Figure 10) can be tied across the joint to make the reinforcing continuous and provide a moment connection once cast-in-place concrete is cast into the crown joint. It took approximately 9 hours to erect all 8 arch rings.

Figure 9: BEBO Crown Joint

Figure 10: Crown Joint Reinforcing in-place

Once the arch units were set, the foundation keyway was grouted and then the crown joint concrete was placed. Once the crown joint concrete reached a compressive strength of 5000 psi, the backfilling and MSE wall construction could commence.

MSE Wall Construction

A Reinforced Earth MSE wall was used for the headwalls and wingwalls of the bridge structure. The contractor stockpiled granular backfill for the MSE walls on either side of the bridge structure and used bulldozers to push the material down to the wall elevation where an excavator on each side of the bridge placed the material which was then compacted (Figure 11). MSE wall construction lasted 5 days and was the construction item that took the longest to complete.

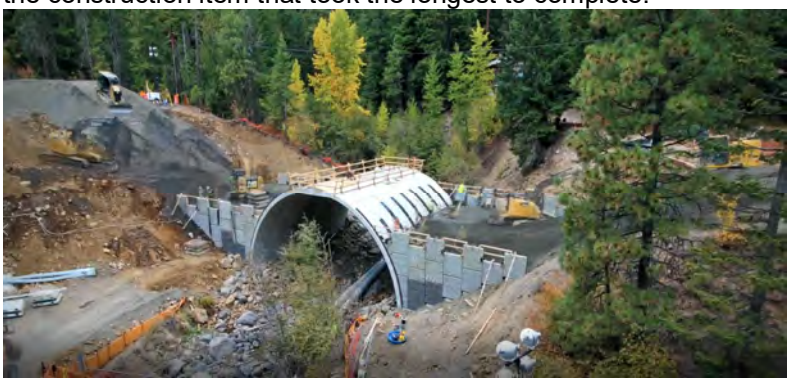

Figure 11: MSE Wall Construction

Lessons Learned – Contractor's Perspective
The Contractor provided feedback that there could have been better quality control of the precast arch units as an error by the precaster caused a delay of approximately 2 hours during arch setting due to fabricating not enough tongue arch units and too many groove arch units. The contractor also stated that better quality control of the MSE wall panel deliveries with the right number of the right type of panels being delivered at the appropriate time would have also sped up construction. Even with these two minor delays, the contractor was able to demolish the existing bridge and construct the new bridge in 17 days working two shifts per day.

WSDOT Experience
After the project was complete (Figure 12), the Washington Department of Transportation put together an information sheet on the project titled "Practical Solutions in the Workplace" which was distributed throughout their offices. The information sheet outlined that the original plan was to replace the existing deteriorated bridge with a new pre-stressed concrete girder bridge with a span of about 150 feet. It explained that the "practical solution" was the project was delivered using the design-build method which allowed the contractor to be innovative in proposing a precast concrete arch bridge that allowed for rapid construction. The outcome was approximately $2 million in savings, reduced traffic impact by 3 months and a more sustainable solution that reduced the project footprint and tree removal. The project has won numerous awards from AGC, ACEC as well as being named the #7 bridge project of 2019 by Roads & Bridges magazine.


Figure 12: US 12 Wildcat Creek Final Construction

LITTLE PILCHUCK CREEK
The Washington State Department of Transportation (WSDOT) utilized a conventional design-bid-build project approach to replace an existing 12' x 6' box culvert that was a fish barrier in Lake Stevens, Washington, a town located approximately 35 miles northeast of Seattle (Figure 13). The project objective was to remove the fish barrier culvert which would provide full fish passage an additional 1.7 miles upstream of the project site. At the 30% plan set stage with the drawings showing a standard WSDOT precast structure shape, the project engineer's office (PEO) decided to leverage industry competition by asking industry competitors to provide alternate structure designs for the contract. A small stipend was provided to both the Pretek Group and Contech Engineered Solutions to provide alternate structure designs for the project so that contractors could choose which alternate they felt was best and then submit a bid for that alternate.

Due to the volume of traffic that would be affected during the box culvert replacement, WSDOT only allowed for two weekend road closures for ground improvement and one 13 calendar day full roadway closure. Jet-grouted columns were installed under the spread foundations in order to mitigate a 10' thick layer of liquefiable soil (Figure 14)

Figure 13: Existing Box Culvert on Little Pilchuck Creek

Figure 14: Jet-Grouted Column Installation

Structure Alternates

Structure Alternate 1 was the WSDOT standard precast 3-sided structure "VC60" culvert shape with a 60' span and 8'-3" rise (Figure 15). It is a shape that has 3 flat chords to make the arch along with large haunches. The precast culvert was set on precast pedestal walls which resulted in about 12' of fill over the top of the structure.

Structure Alternate 2 was the Pretek Eco-Span single leaf precast arch with a 60'-8 5/8" span and 11'-6" rise on precast pedestal walls with CIP foundations (Figure 16). The maximum cover on top of this structure was approximately 7'.

Structure Alternate 3 was the Contech BEBO twin-leaf arch with a 66'-0" span and 24'-0 rise on precast strip foundations. The maximum cover on top of this structure was about 6'-6" (Figure 17).

Alternate 3 had the advantage of not requiring pedestal walls to achieve the vertical clearance which was only able to be achieved using a twin leaf structure.

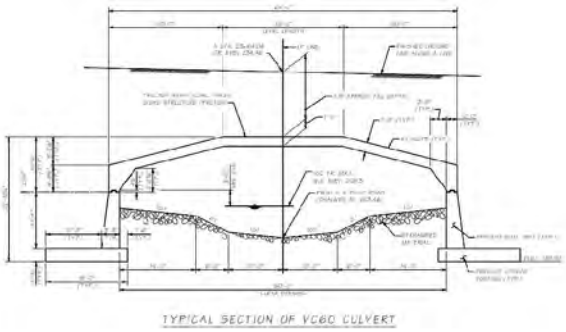

Figure 15: Structure Alt. 1 – WSDOT 3-sided

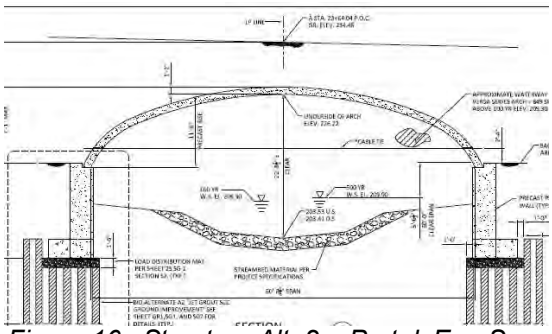

Figure 16: Structure Alt. 2 – Pretek Eco-Span Arch

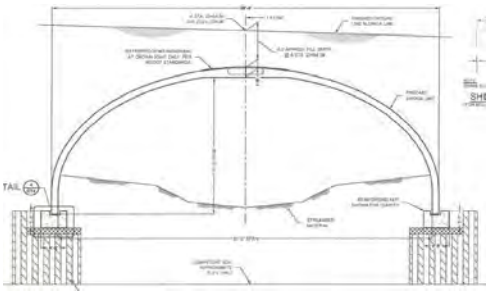

Figure 17: Structure Alt. 3 – Contech BEBO Arch

Figure 19: Little Pilchuck Creek Final Construction

Winning Alternate

Out of the 9 responsive bidders, 7 of them bid on alternate 3. The successful low bidder, Graham Contracting, used Alternate 3 and was $400,000 lower than the lowest bid for the next alternate which was Alternate 1.

Construction

Construction of the Little Pilchuck structure was very similar to the Wildcat Creek project in that once the detour was in place and the roadway closed, excavation for the foundations progressed, precast strip foundations were installed and a slight deviation from what was called for on the contract plans the twin leaf arch units were installed prior to the foundation closure pour concrete being placed due to a material approval issue. Once the arch units were installed the foundation closure pour concrete was placed, the keyway was grouted and then the crown joint reinforcing and concrete were placed. Once the crown joint concrete reached a compressive strength of 3000 psi, backfilling and construction of the Keystone wingwalls and headwalls commenced (Figure 18). Construction was substantially complete by the end of the 13 day roadway closure with the exception of the guardrail and some other ancillary items that caused the contractor to go over the 13 day closure by about 4 days (Figure 19).

Figure 18: Construction Stages showing foundations, arch erection and Keystone wall construction

CONCLUSIONS

Both the Wildcat Creek and the Little Pilchuck Creek bridge replacement projects demonstrated how twin-leaf precast concrete arch structures can be economical substitutes for conventional bridges with the added benefit of rapid construction, on the order of weeks instead of months, when accelerated bridge construction techniques are added to the construction requirements. The 66' span x 24' rise twin-leaf precast arch structure on the Little Pilchuck project allowed for the use of strip foundations in lieu of more costly and time-consuming pedestal wall foundations which resulted in a savings of approximately $400,000 over the next alternate structure with pedestal wall foundations. The 54' span twin leaf precast arch structure on the Wildcat Creek project resulted in $2 million in savings and reduced traffic impact by 3 months over the 150-foot span conventional prestressed concrete girder bridge. Whenever a bridge span is sized based on the bank to bank span at the roadway level versus the required opening for the waterway or roadway there is an opportunity to substitute a precast arch structure with a much smaller span that could provide significant savings in both cost and construction time.

ACKNOWLEDGEMENTS

The authors gratefully acknowledge the support of Graham Construction and the Washington State Department of Transportation.

INTERFACE SHEAR BEHAVIOR OF UHPC WITH AND WITHOUT SUPPLEMENTAL REINFORCEMENT

Zachary B. Haber, Ph.D., Federal Highway Administration, (202) 493-3469, zachary.haber@dot.gov

Benjamin A. Graybeal, Ph.D., P.E., Federal Highway Administration, (202) 493-3122, benjamin.graybeal@dot.gov

INTRODUCTION

Ultra-high performance concrete (UHPC) provides numerous opportunities for innovation in the design and construction of highway bridges. For example, leveraging the advanced properties of UHPC, pretensioned girder geometries can be optimized to span distances much greater than girders composed of conventional or high-strength concretes. Optimized girders would likely include thin webs, tall sections, and large pretensioning forces. This would drive significant interface shear demand into the interface between the girder's flanges and the web. To date, little research has been conducted on the interface shear behavior of UHPC-class materials. To address this gap, the structural concrete research group at the Federal Highway Administration's (FHWA) Turner-Fairbank Highway Research Center (TFHRC) is currently executing an experimental program to evaluate the interface shear behavior of this class of materials. The first phase of the testing program examined monolithic UHPC interfaces with and without supplemental mild steel reinforcement. Tests were conducted on single shear pushoff specimens. This extended abstract briefly describes the experimental program and highlights the key findings of this research. Results are compared with existing high-strength concrete and UHPC interface shear test data and design code provisions.

EXPERIMENTAL PROGRAM

A total of five S-shaped specimens were designed and fabricated. Figure 1-a and 1-b present the specimen geometry and cross-section details, respectively. The quantity of passive reinforcing steel was the only variable investigated. Four interface reinforcement ratios were considered, which ranged from 0% to 0.98%. The interface reinforcement was composed of two-legged #3 stirrups. The tensile properties of the steel rebars were evaluated using ASTM International (ASTM) A370. The #3 bars had a measured yield strength of 55 ksi. The shear interfaces measured 12 inches tall and 7.5 inches wide, which resulted in an interface area of 90 in^2; interfaces were monolithic.

Specimens were constructed in the Structures Lab at FHWA's TFHRC. The specimen forms were built on the lab floor with the top face open to the air (shown in Figure 1-c). During construction, UHPC was placed into the form at the same location for each specimen (shown in Figure 1-c). The UHPC flowed across the interface region and into the bottom leg of the specimen. This maintained similar fiber distributions among specimens. The UHPC-class material used in this study is commercially available in the United States. The UHPC mixture was dosed with 2% steel microfiber reinforcement by volume. The fibers had a nominal length of 0.5 inches, a nominal diameter of 0.008 inches, and a minimum tensile strength of 290 ksi. The measured compressive strength of the UHPC ranged from 21.7 to 23.2 ksi; strength was measured according to ASTM 1856 on the day of test for each interface shear specimen.

Specimens were tested upright in a load frame that employed a servo-hydraulic ram capable of applying 600 kip of load. Specimens were carefully installed into the load frame so that the interface shear plane was vertically aligned with the applied load path. Each specimen was leveled and plumbed prior to being grouted in place on steel bearing pads. Load was applied at a rate of 0.05 in/min prior to rupture of the interface, and 0.1 in/min thereafter if the specimen had post-rupture load-carrying capacity. Specimen deformation was captured using a commercially available digital image correlation (DIC) system. The DIC system was used to capture interface slip and specimen rotation. Deformation measurement locations are shown in Figure 1-d. Applied load was measured using a 1000-kip load cell.

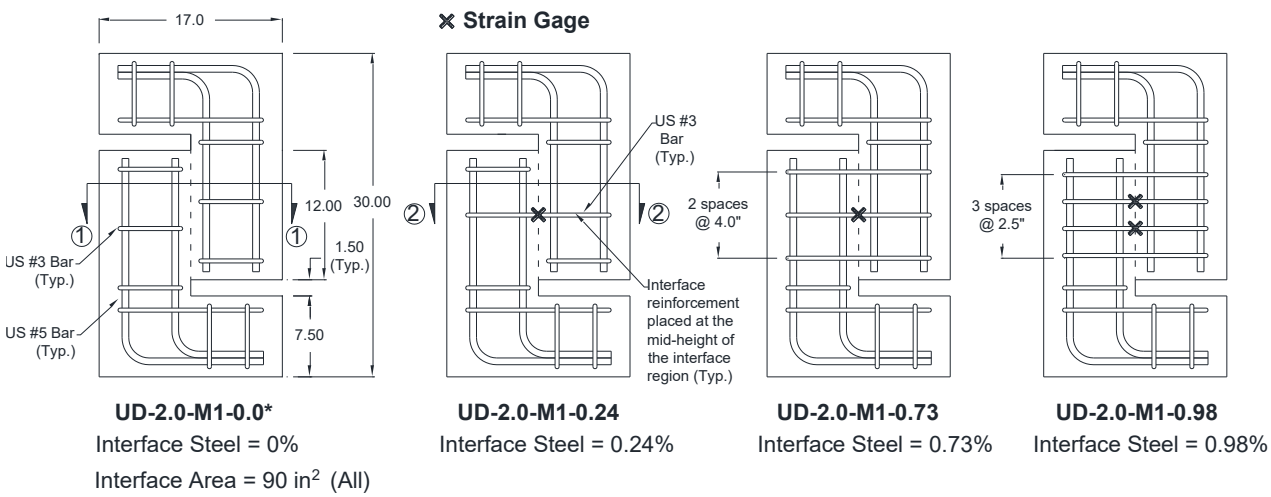

a) Specimen geometry and reinforcement layout: * Two identical specimens were tested.

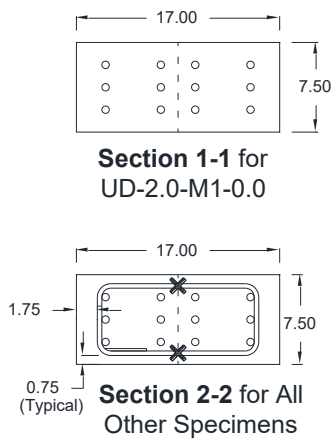

(b) Specimen cross-section details.

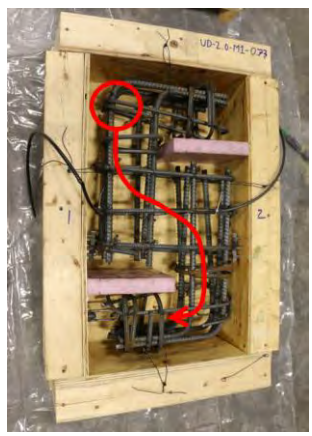

Casting location and flow direction shown in "red."

(c) Specimen construction.

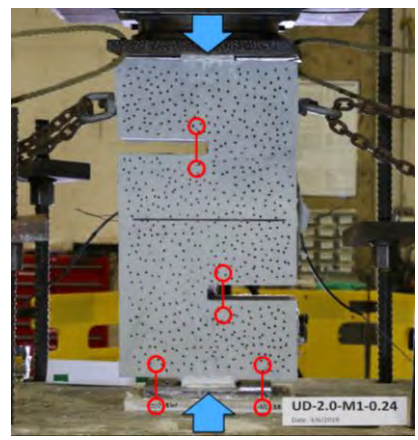

= Denotes a virtual instrument in the DIC system.

(d) Test setup and virtual instruments.

Figure 1. Specimen details and test setup (all units in inches). Source: FHWA

RESULTS

Figure 2 shows the characteristic load-slip curves for specimens with (UD-2.0-M1-0.98) and without (UD-2.0-M1-0.0) interface reinforcement. The load-slip response for all five specimens was observed to be initially linear and then softened slightly as the load increased. The UHPC showed initial cracking along the shear plane at stress levels between 1.1 and 1.6 ksi in specimens that included interface reinforcement; cracking was confirmed using strain gage data recorded from interface reinforcement. Each specimen experienced rupture of the monolithic UHPC interface either at, or shortly after, reaching peak load. Interface rupture was abrupt and resulted in significant or complete loss of load-carrying capacity.

Specimens with interface reinforcement were able to carry post-rupture loads. In these cases, once rupture occurred, the reinforcement was able to restrain the complete separation of the two L-shaped segments of the specimens. However, the two L-shaped segments did undergo noticeable deformation, which is termed "mobilization" as noted in Figure 2. The mobilization deformations ranged between 0.18 and 0.33 inches. Increasing the level of interface reinforcement was found to decrease the post-rupture mobilization. After mobilization, the load-slip behavior is governed by dowel action of the interface reinforcement, which eventually fractured (see Figure 2) as deformations became large.

The relationship between the peak shear stress and the passive clamping pressure provided by interface reinforcement is shown in Figure 3; clamping pressure is equal to the area of interface steel times the yield strength of that steel. This plot also shows relationships from previous research on high-strength concrete and UHPC; the data shown reflects monolithic, initially uncracked interfaces. The plot also shows the capacity of normal-weight concrete per the American Association of State Highway and Transportation Officials (AASHTO) Bridge Design Specification (BDS) (1). In general, the data collected in this study exhibits a proportional relationship between the ultimate shear stress and clamping pressure. However, the relation is not as significant as that found by Crane (2). The data collected herein suggests that the mild steel interface reinforcement does not significantly contribute to the interfacial shear resistance of UHPC when reinforcement ratios are below 1.0%. This is likely due to UHPC's inherently high interface shear strength. The measured interface shear strength of monolithic UHPC was approximately six times higher than that predicted by the AASHTO BDS for normal-weight concrete, and three times higher than that measured for high-strength concretes.

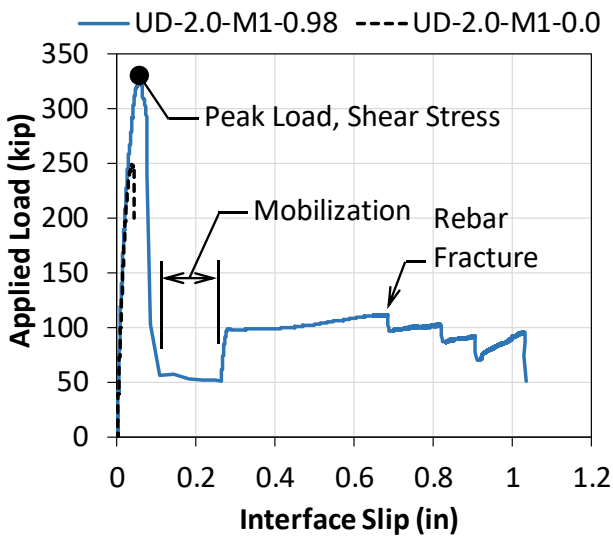

Figure 2. Characteristic Load-Slip Relations. Source: FHWA

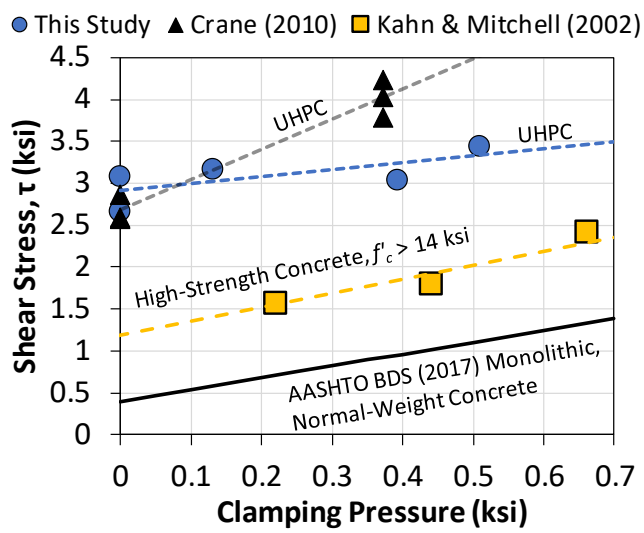

Figure 3. Shear stress vs. clamping pressure. Source: FHWA

CONCLUSIONS

UHPC-class materials exhibit interface shear strengths that are significantly higher than those exhibited by conventional or high-strength concretes in the monolithic condition. The interface shear provisions in the AASHTO BDS significantly underestimate the monolithic interface shear capacity of UHPC. The primary variable studied herein was the quantity of reinforcement crossing the shear interface. A proportional relationship was observed between the ultimate shear stress capacity and the passive clamping force provided by the interface reinforcement. However, the relationship was not as significant as that observed in a previous study. The experimental results show that interface reinforcement ratios below 1.0% are not effective in maintaining the UHPC's peak interface shear load-carrying capacity. UHPC has an inherently high interface shear capacity. As such, reinforcement ratios below 1.0% do contribute to higher interface shear capacities, but cannot maintain peak load after rupture of the interface; lower post-rupture loads can be sustained.

REFERENCES

1. AASHTO. (2017). *AASHTO LRFD Bridge Design Specifications.* Washington, D.C.
2. Crane, C. K. (2010). "Shear and Shear Friction of Ultra-High Performance Concrete Bridge Girders." Dissertation, Georgia Institute of Technology.
3. Kahn, L. F., and Mitchell, A. D. (2002). "Shear Friction Tests with High-Strength Concrete." *Structural Journal*, 99(1).

FIELD-CAST CONNECTION PERFORMANCE: SOLUTIONS TO SHRINKAGE AND INTERFACE BOND ISSUES

Igor De la Varga, Ph.D. SES Group and Associates, (202)493-3433, igor.delavarga.ctr@dot.gov
Robert P. Spragg, Ph.D. Federal Highway Administration, (202)493-3233, robert.spragg@dot.gov
Benjamin A. Graybeal, Ph.D., P.E., Federal Highway Administration, (202)493-3122, benjamin.graybeal@dot.gov

ABSTRACT

Field-cast connections between prefabricated bridge elements have traditionally been a weak link in accelerated bridge construction (ABC) systems. Although high quality prefabricated steel and concrete elements can be delivered to the project, the field construction activities related to connecting the elements have been less controlled and have used materials with lesser durability. These connections, including their design, materials, interfaces, constructability, and durability, must be robust else the advantages gained through the use of ABC can be lost through poor system performance. Grout-like materials are often used for these connections, with cementitious grouts being the most common due to its low cost. However, serviceability problems in the form of shrinkage and loss of interface bond have been observed in these connections. This paper presents a summary of suite of research studies focused on improving the shrinkage and interface bond properties of field-cast connections. Strategies to improve both properties are suggested, creating the opportunity for better performing ABC solutions.

INTRODUCTION

Accelerated bridge construction (ABC) has become popular in the bridge construction industry. More than 120 projects have been completed solely in the United States as of 2019 (1). The use of prefabricated bridge elements (PBE) is one strategy that can meet the objectives of ABC. These structural components are built offsite, and include features that reduce the onsite construction time and mobility impact time that occur from conventional construction methods (2). Once transported to the construction site, these elements need to be connected. Cementitious grouts are most often used to easily and efficiently complete these connections due to their low material cost. However, serviceability problems often in the form of shrinkage and loss of interface bond have been observed in these connections.

SHRINKAGE

Shrinkage is an inherent mechanism of any cement-based material. When cement reacts with water, the hydration reaction products occupy less volume than the reactants (3). Once the hydrating material reaches its set point, this volume reduction causes internal stresses that may ultimately crack the material. This effect is harsher in drier environmental conditions, where the evaporation of the material's water contributes to increased shrinkage. Cementitious grouts are then expected to exhibit some degree of shrinkage, despite their popular commercial nomenclature of 'non-shrinking' materials. Figure 1(a) shows high shrinkage deformations of several commercially-available cementitious grouts that could be used in PBE connection applications (adapted from (4)).

INTERFACE BOND

Large amounts of shrinkage in PBE connections are expected to affect the bond between the grout connection and the prefabricated concrete element. Bond in cement-based materials is a complex mechanism affected by many simultaneous parameters including as shrinkage of the materials being bonded. Other parameters include substrate surface moisture/roughness levels, and curing and rheological properties of the materials, to name just a few (5). To visually understand the shrinkage and potential bond issues of a grouted connection, Figure 1(b) shows the cracking pattern of a cementitious grout that

connected two concrete elements tested under mechanical fatigue loading (6). Cracks before loading (blue lines) correspond to shrinkage cracking, which propagated through the material as well as to the grout-concrete interface after the specimen was loaded (yellow lines).

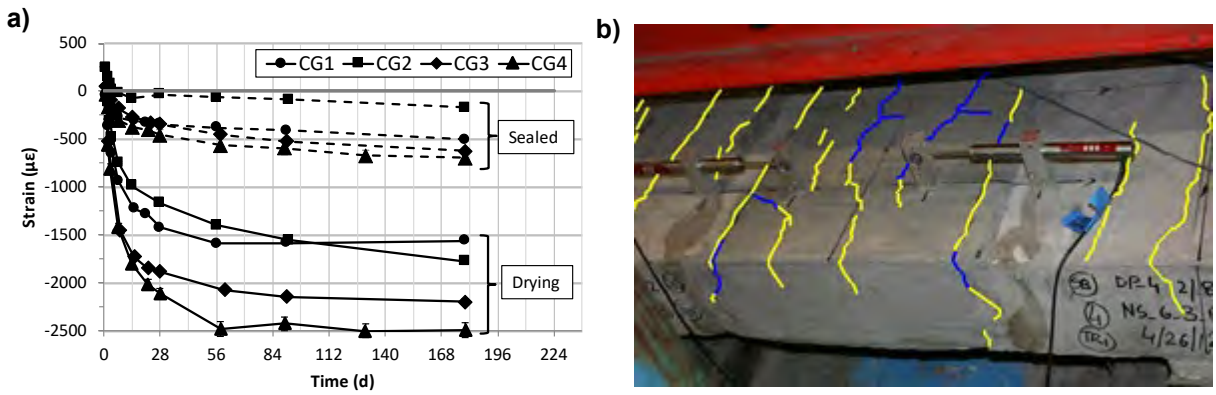

Figure 1. (a) Measured autogenous (sealed) and drying shrinkage of four commercially-available cementitious grouts (adapted from (4)), (b), Grout-concrete connection showing shrinkage cracks (blue lines) and mechanical loading cracks (yellow lines) (6).

SOME PROPOSED SOLUTIONS TO SHRINKAGE AND INTERFACE BOND ISSUES

Some of the results obtained in investigations carried out by the authors of this paper to overcome shrinkage issues in cementitious grouts are presented here; namely, the inclusion of internal curing (IC) in cementitious grouts, and the use of advanced materials such as ultra-high-performance concrete (UHPC). While the former technology has been proven in conventional concretes with successful outcomes (7), the latter has gained much popularity given the outstanding performance that the material provides. Figure 2(a) shows the measured shrinkage of a commercially-available cementitious grout with and without IC, compared to a UHPC material. As observed, both internally-cured grout and UHPC significantly exhibited less shrinkage than the control grout in both drying and sealed (autogenous) humidity conditions. Reasons to explain these results can be found elsewhere (8).

Similarly, one of the investigated solutions to overcome the potential loss of bond due to high shrinkage at the grouted connection is presented in Figure 2(b). The figure shows 'pull-off' tensile bond strength results of both a cementitious grout and a UHPC. In this case, the effect that different substrate surface roughness levels have on the bond strength was studied. The different roughness profiles were achieved through the use of commercially-available in-form retarders (6). As expected, the rougher the surface, the higher the bond strength. However, the UHPC material only needed a minimum roughness level to achieve much higher bond strengths, explained by the ideal consolidation properties and high mechanical properties of this type of material (9).

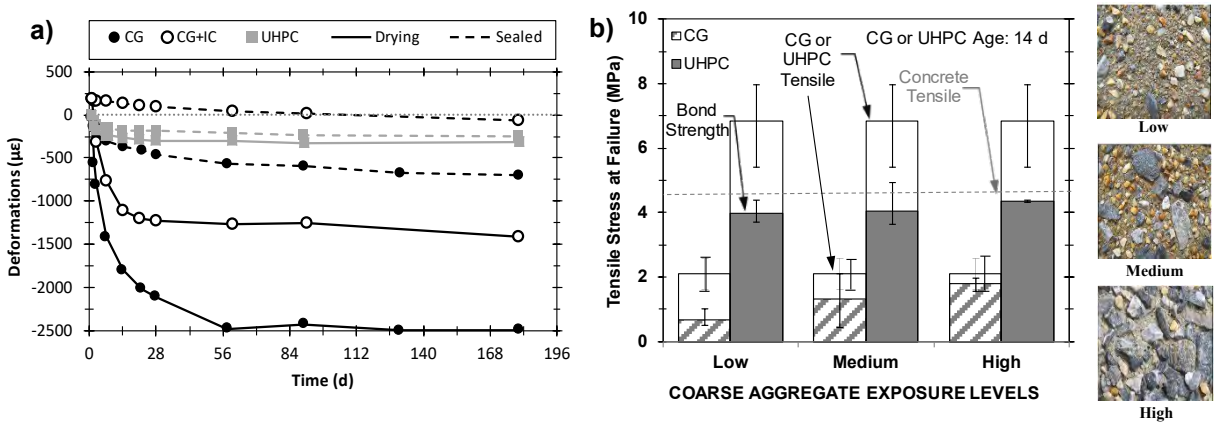

Figure 2. (a) Measured autogenous (sealed) and drying shrinkage of a cementitious grout with and without IC, and an UHPC (adapted from (8)), (b) Tensile bond strength of a cementitious grout and an UHPC cast over a concrete substrate surface roughened at different levels (8).

CONCLUDING REMARKS

Design and detailing of connections between prefabricated bridge elements is critical to achieving a functional, durable, and robust structural system. Cold joints between the prefabricated concrete elements and field cast closure grouts are unavoidable and can result in premature shrinkage cracking and loss of bond at the grout-concrete interface. Therefore, the paper presented easy-to-implement solutions to address some of these issues. A broader set of solutions and recommended practices are provided in the conference presentation.

REFERENCES

(1) Florida International University. University Transportation Center - Accelerated Bridge Construction Project Database. http://utcdb.fiu.edu/

(2) Culmo, M. P. (2011). Accelerated Bridge Construction - Experience in Design, Fabrication and Erection of Prefabricated Bridge Elements and Systems (No. FHWA-HIF-12-013). In *FHWA-HIF-12-013*. Retrieved from Federal Highway Administration - U.S. Department of Transportation website: http://www.fhwa.dot.gov/bridge/abc/docs/abcmanual.pdf

(3) Le Chatelier, H. (1900). *Sur les changements de volume qui accompagnent le durcissement des ciments* (5th ed.). Paris, France: Bulletin Société de l'Encouragement pour l'Industrie Nationale.

(4) De la Varga, I., & Graybeal, B. A. (2015). Dimensional stability of grout-type materials used as connections between prefabricated concrete elements. *Journal of Materials in Civil Engineering*, *27*(9). https://doi.org/10.1061/(ASCE)MT.1943-5533.0001212

(5) Silfwerbrand, J., & Beuhausen, H. (2005). Bonded concrete overlays–bond strength issues. *International Conference on Concrete Repair, Rehabilitation and Retrofitting*, 19–21. Cape Town, South Africa.

(6) Haber, Z., De la Varga, I., & Graybeal, B. A. (2016). Performance of grouted Connections for prefabricated Bridge Elements. Part II: Component-Level Investigation on bond and Cracking. *2016 PCI Convention and National Bridge Conference*. Nashville (TN), USA.

(7) Bentz, D. P., & Weiss, W. J. (2011). Internal Curing: A 2010 State-of-the- Art Review (No. NISTIR 7765). In *National Institute of Standards and Technology (NIST) Report 7765*. Gaithersburg (MD), USA: National Institute of Standards and Technology - U.S. Department of Commerce.

(8) De la Varga, I., Haber, Z. B., & Graybeal, B. A. (2018). Enhancing Shrinkage properties and bond performance of prefabricated bridge deck connection grouts: Material and component testing. *Journal of Materials in Civil Engineering*, *30*(4). https://doi.org/10.1061/(ASCE)MT.1943-5533.0002235.

(9) Haber, Z. B., Munoz, J. F., De la Varga, I., & Graybeal, B. A. (2018). Bond characterization of UHPC overlays for concrete bridge decks: Laboratory and field testing. *Construction and Building Materials*, *190*, 1056–1068. https://doi.org/10.1016/j.conbuildmat.2018.09.167

END ZONE DESIGN AND BEHAVIOR OF PRESTRESSED UHPC GIRDERS

Alireza Mohebbi, Ph.D., National Research Council Associate at the Turner-Fairbank Highway Research Center, (202) 493-3073, alireza.mohebbi.ctr@dot.gov
Rafic El-Helou, Ph.D., Genex Systems, LLC, Turner-Fairbank Highway Research Center, (202) 493-3482, rafic.elhelou.ctr@dot.gov
Benjamin Graybeal, Ph.D., P.E., Federal Highway Administration, (202) 493-3122, benjamin.graybeal@dot.gov

INTRODUCTION

The use of ultra-high performance concrete (UHPC) in bridge engineering and highway infrastructure has been gaining momentum in recent years. UHPC can be used in prestressed bridge girders to deliver new benefits for highway bridges compared to conventional concrete including longer spans, shallower superstructure depth, and smaller cross sections. In this study, several full-scale prestressed bridge girders with different depths and web thicknesses were constructed utilizing two commercially available UHPC products. The end zone design methodology was similar to the American Association of State Highway and Transportation Officials (AASHTO) design method except that it allowed the steel and UHPC to concurrently resist cracking stresses in the web. As implemented, the methodology limited the allowable UHPC stress to a conservative estimate of the tensile cracking strength. This paper constitutes a discussion of the end zone behaviors of heavily prestressed UHPC girders and explains the design methodology. The results presented herein focus on end zone behaviors of two representative girders, each made with a different UHPC-class material, and validates the design method through actual strain measurements taken during the release of strands.

END ZONE DESIGN

AASHTO Load and Resistance Factor Design (LRFD) Bridge Design Specifications, section 5.9.4.4 (1), provides a design methodology for end zones of prestressed concrete girders. The design method assumes that four percent of the prestressing force in the bottom bulb of girders contributes to the splitting force in the web. To resist the splitting force, vertical mild steel reinforcement should be placed within the distance of h/4 from the end of the girders, where h is the girder height. For crack control, the size of the reinforcement should be determined so that the stress in the steel does not exceed 20 ksi. The AASHTO design method assumes that the concrete provides no tensile resistance and that only vertical steel reinforcements resist the splitting force. The AASHTO design method can be used as a starting point to design prestressed girders with UHPC-class materials; however, the tensile behaviors of UHPC provide benefits that can also be engaged in the design. In this study, several full-scale prestressed girders were designed with different geometries and web thicknesses using a similar approach as previously described except that the UHPC and steel reinforcement concurrently resist the splitting force in the web. The total splitting force for these girders was assumed to be four percent of the prestress force in the bottom bulb. The allowable UHPC stress in design was 1 ksi, which corresponded to a conservative approximation of the average of the tensile stress of the UHPC-class materials at first cracking, which was determined by direct tension tests (2). The design assumed that the UHPC contributed to the splitting resistance in the web within the distance of h/4 from the girder end and the remaining resistance was provided by vertical mild steel reinforcements while the stress did not exceed 20 ksi. The girder cross-sectional shapes were based on modified versions of the PCEF section with narrower web thickness. The girders were heavily prestressed with 24 0.7-inch diameter strands in the bottom bulb and two 0.7-inch diameter strands in the top bulb with varying levels of vertical mild steel reinforcement in the end zones. Table 1 summarizes the end zone properties of two representative girders designed and constructed using two different UHPC-class materials. In the context of this paper, the girders will be referred to as Girder A and Girder B.

TRANSFER LENGTH

Transfer length is the required length of strands to develop stress in prestressing steel that gradually increases from zero, where bonding starts, to the effective prestress. According to AASHTO LRFD section 5.9.4.3, the transfer length of steel strands in conventional concrete is $60d_b$, where d_b is the nominal diameter of the strands (1). Transfer length highly depends on the bond strength of concrete. UHPC has a higher bond strength compared to conventional concrete; therefore, the transfer length of the strands in UHPC-class materials is expected to be less. Different methods were used to measure the transfer length of 0.7-inch diameter strands in the girders. One method was to place several vibrating wire gauges (VWG) in a stagger pattern in the bottom bulb within 35 inches of the girder ends and record the change in the strain of the VWG gauges before and after release. Figure 1 shows the measured data of the two representative girders, A and B at prestress transfer. The design and geometry of these girders were the same and the only difference was the UHPC-class material. The plots show that the strain in the bottom bulb gradually increased until approximately 15 inches after which it remained constant. According to the AASHTO predictive relationship, the transfer length of 0.7-inch diameter strand in conventional concrete is 42 inches (1) which is more than 2.5 times the measured transfer length in the UHPC girders.

END ZONE CRACKING AND STRAIN BEHAVIOR

The end zones of prestressed girders may crack because of the transfer of the prestressing force to concrete. The end zones of the girders were closely inspected after release of strands. No cracks of the size often observed in the end zones of conventional concrete girders were observed. However, UHPC cracks are usually small and barely visible with the naked eye. To find hairline UHPC cracks, denatured alcohol was sprayed at the end zones of the girders. Isolated cracks became visible and were marked while denatured alcohol evaporated. Figure 2 shows the cracking of the end zones of the two representative girders. As indicated in the pictures, the horizontal hairline cracks in the web propagated about 5.5 inches and 10 inches in the girders A and B, respectively. The length of the crack in Girder A was shorter than the length of the crack in Girder B because the UHPC-class material in Girder A was of higher tensile strength. Additionally, electrical resistance strain gauges were installed on the vertical reinforcement in the end zone at different heights to measure strain in the rebar during release of strands. Figure 3-a shows strain distribution along the length of the girders based on the maximum measured strain in the rebar. Results demonstrate that strain in the end zone of the girders linearly reduced within the distance of h/4 from the girder end assuming strain compatibility between vertical reinforcement and UHPC. UHPC first cracking strain is also shown in the plot indicating UHPC reached its allowable stress at first cracking in the h/4 region, as was intended in the design. Results are also consistent with the observed hairline cracks at the end zone.

EVALUATION OF DESIGN METHOD AND CONCLUSIONS

According to the end zone design, the stress in steel reinforcement due to prestressing was limited to 20 ksi. To evaluate the design method, stress in the vertical reinforcement was calculated by multiplying the measured strain by the elastic modulus of the reinforcement. Results are shown in Figure 3-b. The stress in all the steel reinforcement was less than 20 ksi within the distance of h/4 of the girder end except for the nearest rebar to the girder end in Girder B in which the stress was 24 ksi. This could be because of the slightly lower tensile strength of the UHPC-class material in Girder B compared to Girder A. In addition, the contribution of the reinforcement close to the girder end in splitting resistant was more than other reinforcement placed further into the girder. This study showed that the current design method for the end zones of prestressed I-girders is applicable to UHPC girders assuming the steel and UHPC concurrently resist cracking stresses in the web.

Table 1. End Zone Properties of Girders.

Girder Name	Top/Bottom Bulb Width	Height	Web Thickness	Reinforcement Over h/4 Region		UHPC-class
	(in)	(in)	(in)	Vertical Steel	Confinement Steel	
A	28	35	3	2-Bundled #5@3"	#3@3"	H
B	28	35	3	2-Bundled #5@3"	#3@3"	J

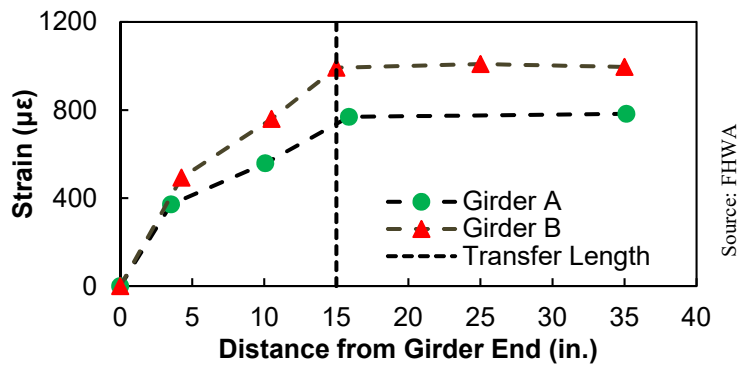

Figure 1. Transfer length of 0.7-inch diameter strands in UHPC girders after release.

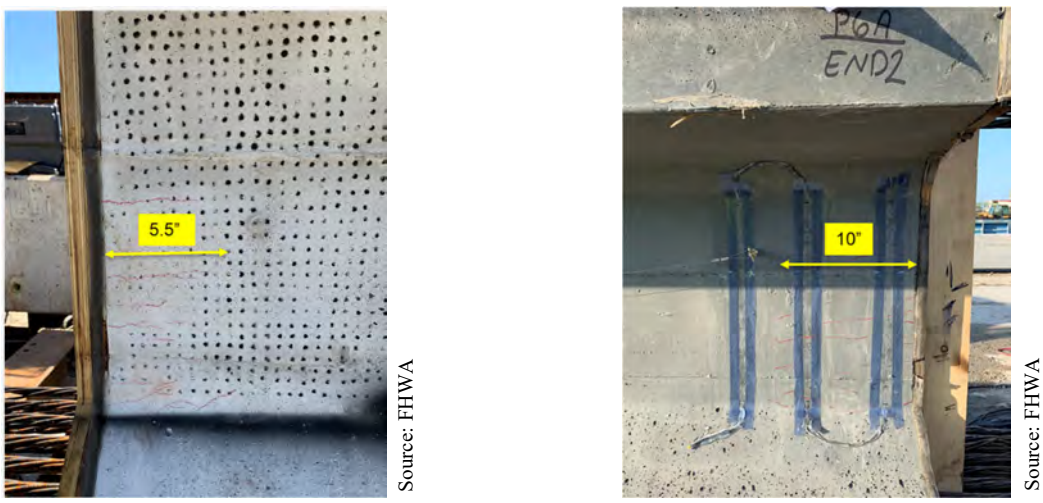

(a) (b)

Figure 2. End zone cracking after release (a) Girder A (b) Girder B.

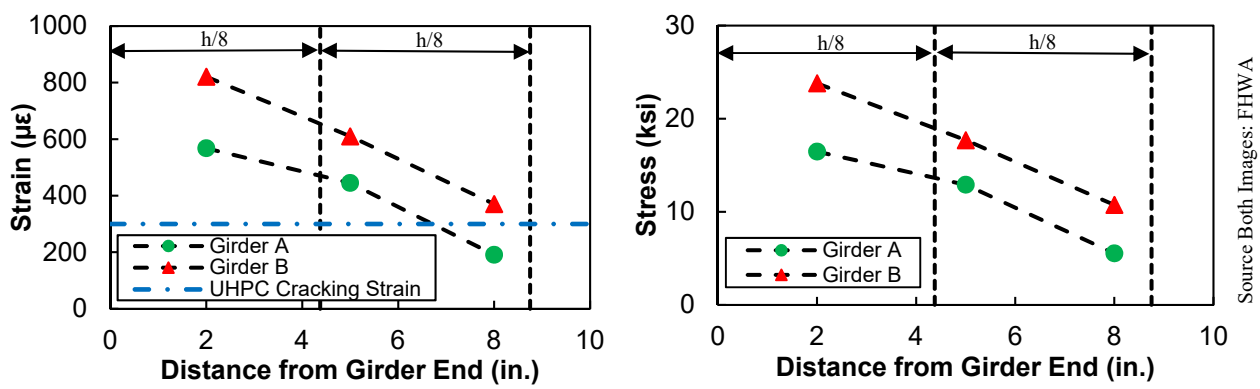

(a) (b)

Figure 3. End zone behavior after release (a) Strain distribution (b) Stress distribution.

REFERENCES

1. AASHTO, "LRFD Bridge Design Specifications," 8th Edition, Washington, DC, 2017.
2. Haber, Z., De la Varga, I., Graybeal, B., Nakashoji, B., and El-Helou, R. "Properties and behavior of UHPC-class materials," FHWA, U.S. Department of Transportation, Report No. FHWA-HRT-18-036. Office of Infrastructure Research and Development, 2018.

REMOTE MONITORING AND INNOVATIVE TECHNIQUES FOR THE CONSTRUCTION OF THE NORFOLK SOUTHERN BRIDGE OVER COTTON RUN, SEVEN MILE, OH

Lisa Hoekenga, PE, SE, Michael Baker International, (216)776-6814, lisa.hoekenga@mbakerintl.com
Brett Mattas, PE, SE, Michael Baker International, (614)538-7606, brett.mattas@mbakerintl.com

ABSTRACT

A storm event on May 24th, 2017 caused settlement of one of the piers of the Norfolk Southern Bridge CF-35.40 in Seven Mile, OH of more than one foot with a corresponding superstructure distortion. Norfolk Southern immediately installed timber cribbing and rip rap around the piers to restore service under reduced speeds. A structural monitoring system consisting of tilt meters and settlement gages were installed on the bridge with remote viewing capabilities while permanent improvements were developed. A replacement structure was designed to replace the existing structure utilizing accelerated bridge construction techniques. The 24-hour outage was executed on May 21, 2018, one year after the storm event.

INTRODUCTION

A large storm event came through Seven Mile, Ohio on May 24th, 2017. The mayor of Seven Mile, Vivian Gorsuch, described the storm as the worst flooding that the city has seen in 35 years McCrabb (1). The Butler County Emergency Management Agency estimated that the storm brought almost 5 inches of rain in two hours and local newspapers reported that U.S. 127 had been overtopped in several locations. Just downstream of the U.S. 127 bridge over Cotton Run is the Norfolk Southern bridge CF-35.40. The bridge spans over Cotton Run which flows into Seven Mile Creek in Seven Mile, Ohio.

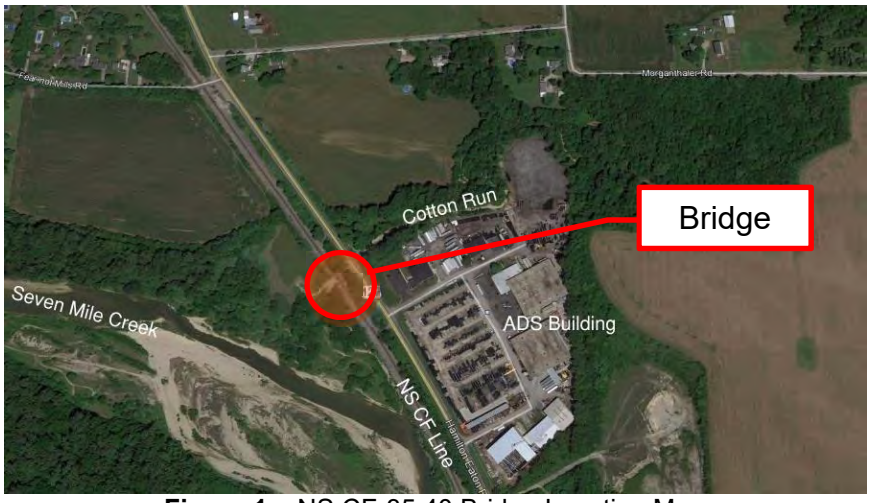

Figure 1 – NS CF-35.40 Bridge Location Map

The flash flooding through Cotton Run created a scour condition around the East Pier of the NS CF-35.40 resulting in settlement of the pier by more than a foot. The pier settled nearly vertically with no noticeable rotation suggesting that the settlement may have been the result of a bearing capacity failure after the scour removed the adjacent over burden material rather than removal of material from beneath the footing. The pier settlement resulted in movement and rotation of the two concrete box beam spans supported on the pier and ultimately a loss of support at track level.

Figure 2 – NS CF-35.40 over Cotton Run after Storm Event, May 25th, 2017

Norfolk Southern personnel were on site soon after the storm to assess the damage and prepare an immediate response to restore service to this line. The bridge is located on the Northern Region's Lake Division and supports one track carrying approximately 15-20 trains per day between Cincinnati and Richmond, continuing on to Muncie. This is a prime route for time-sensitive shipments between Detroit, Chicago, Fort Wayne and to the south through Cincinnati, so restoration of rail operations was needed as soon as possible. Norfolk Southern contracted with Fenton Rigging & Contracting and they mobilized immediately to install rip rap and stone in the scour hole and constructed a timber mat support around the East Pier to serve as a "catch bent". Steel beams were used to brace the East Pier against the adjacent East Abutment and West Pier to provide lateral support of the pier. Additional ballast was added above the settled portion of the superstructure and the track realigned to reestablish service on the track.

EXISTING BRIDGE INFORMATION

The existing structure was a three-span concrete slab beam bridge supported on concrete piers and concrete gravity abutments. The record drawing on file for this bridge indicate the current substructure was built in 1926 and that the piers are founded on spread footings 8'-0" wide and 4'-0" deep (see Figure 3.

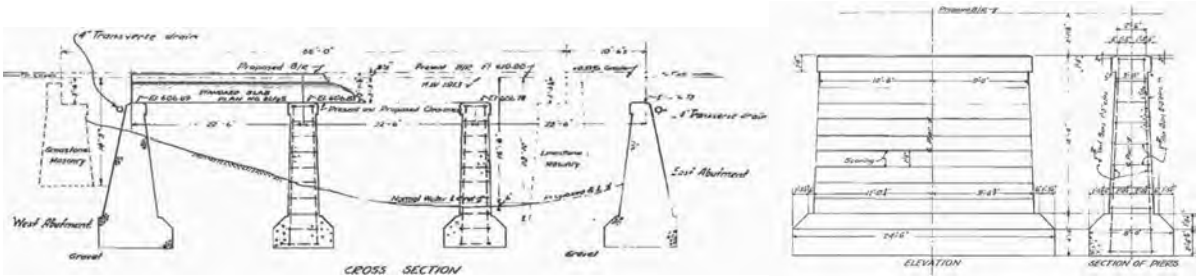

Figure 3 – NS CF-35.40 over Cotton Run Existing Cross Section and Bridge Pier Details

The bridge was built as a replacement to another structure with the new abutments located on font of and behind the previous abutments, maintaining approximately the same overall bridge length. The spread footing foundation for the pier proved to be insufficient for the hydraulic scour conditions of Cotton Run during the storm event. The foundation elements for the US-127 highway bridge just upstream had been retrofitted in 1983 with steel sheet piling around the piers and abutments during a planned superstructure replacement. This scour countermeasure likely prevented a similar failure of the highway bridge.

MONITORING SYSTEM

Bracing the bridge with a rip rap base, timber cribbing and steel rolled shapes (see Figure 4), provided additional resistance to complete collapse of the bridge if additional settlement or rotation of the pier occurred. However, additional settlement of the weakened soil beneath the pier footing could occur at any

time resulting in misalignment of the tracks. Additionally, another storm event might result in sudden failure of the weakened bridge. Because Norfolk Southern restored operations on the bridge at a reduced speed, they needed to be able to stop trains if additional settlement of the bridge occurred. Periodic surveying was considered and determined to be too costly and would be difficult to execute during storm events similar to the one that precipitated the scouring and undermining of the East Pier. More importantly, periodic surveying would not provide the required real time information necessary to justify a decision to suspend train operations if required. Ultimately, a monitoring system was selected to log readings of bridge movement at less than 5-minute intervals and transmit an alarm if large movements of the structure were detected. This monitoring system would provide real time warning to Railroad Operations, allowing them to halt trains over the bridge if the track and/or structure was further compromised.

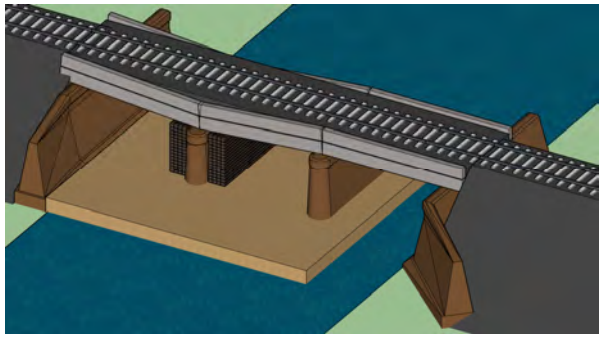

Figure 4 – Model of Bridge with Emergency Repairs

MONITORING SYSTEM

Geo Instruments, Inc. was subcontracted to install the monitoring system on the bridge, process sensor readings and maintain a project website that provided real-time data readings and graphs. The system was comprised of electrolevel tiltmeters, settlement gages, and a data logger fitted with a cellular phone connection. The data logger reported the instrumentation readings in addition to battery condition and temperature. The batteries were maintained by solar panels mounted on the enclosure. See Figures 5 & 6 for instrument locations.

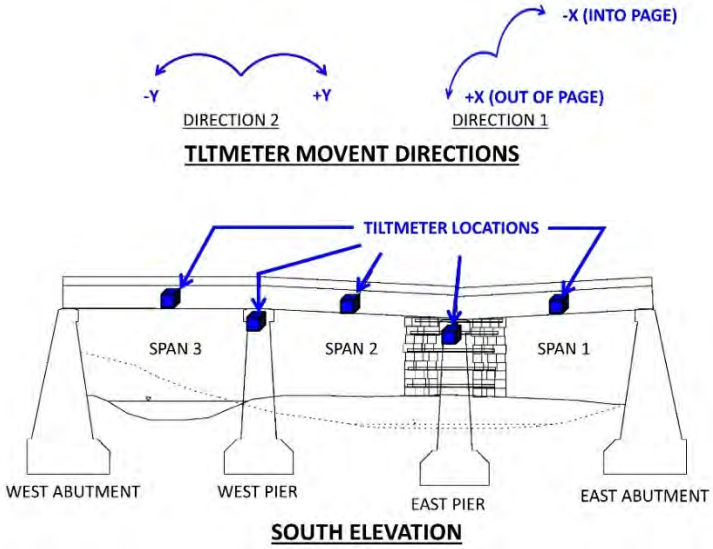

Figure 5 – Placement of Tiltmeters on South Side of Bridge. North Side Similar.

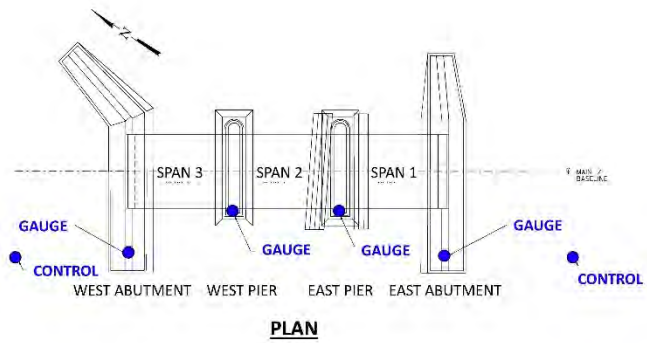

Figure 6 – Placement of Settlement Gauges on Piers and Abutments

RESULTS OF MONITORING

The monitoring was able to detect sudden movement events. Most movement was related to thermal expansion and contraction of the bridge. A typical sudden movement event is shown in Figure 7.

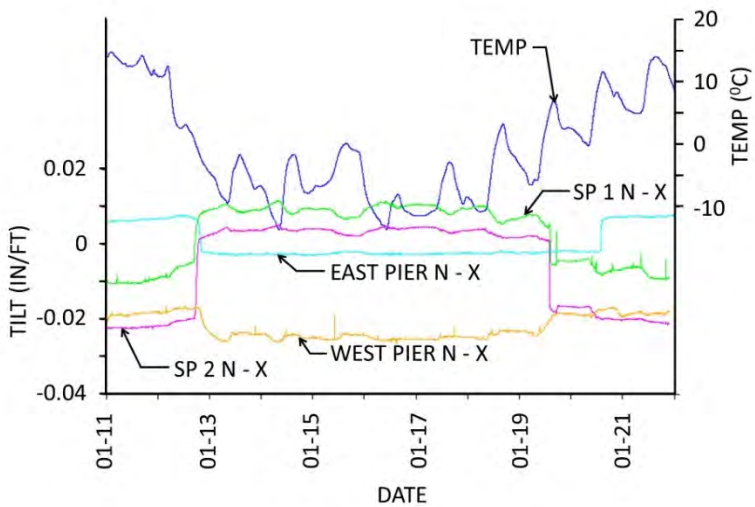

Figure 7 – Movement Event on North Side of Bridge, January 12 – 19, 2018

In this case the extremely low temperature resulted in rotation of span 1 and span 2 and corresponding rotations of the east and west pier. The movements recovered to their original position as the temperature warmed up. These movements were within the tolerances set up, so no alarm was generated.

The monitoring system detected continued settlement of the east pier during the time between the initial event and the final bridge replacement. Figure 10 summarizes the overall rotation of the tiltmeters on the spans. It can be seen that spans 1 and 2 show equal and opposite rotations as the east pier continued to settle. The total rotation was approximately 0.03 in/ft and 0.025 in/ft for span 2 and span 1 respectively. Span 3 showed much les rotation.

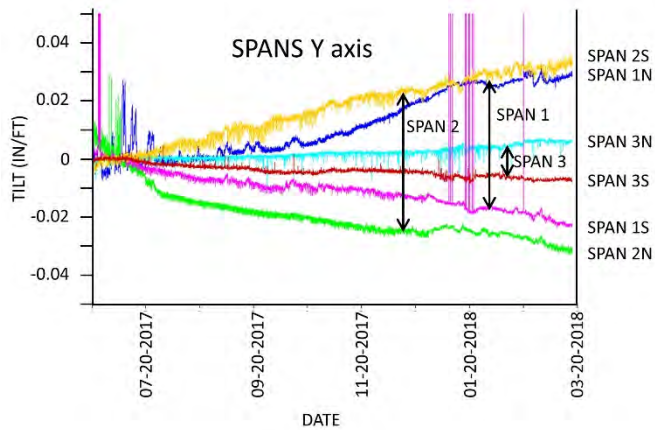

Figure 8 – Summary of Rotation of Span Tiltmeters in Y-Direction

Figure 9 shows the locations and directions of the total rotations shown in Figure 10 above. From the rotations and directions, it can be inferred that the east pier moved downward about 0.55 inches relative to the abutments.

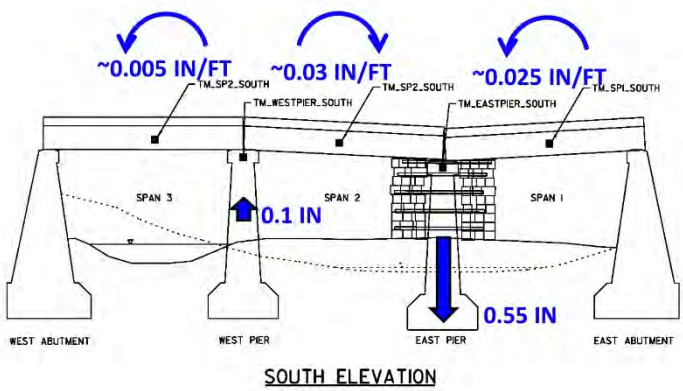

Figure 9 – Average Net Rotations of Span Tiltmeters in Y-Direction

The settlement gauges were severely impacted by daily temperature cycles and solar radiation. However, as shown in Figure 10, a general trend can be discerned. The east pier appears to have settled almost 1 inch while the west pier may have settled up to 0.5 inches during the time between installation of the gauges and replacement of the bridge.

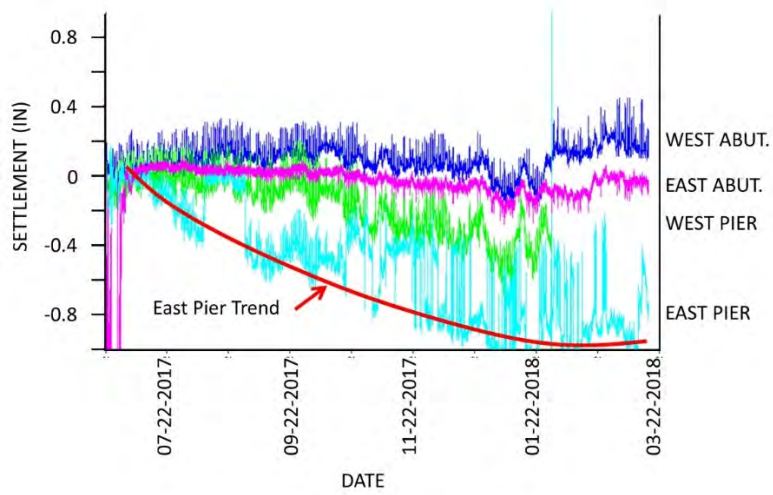

Figure 10 – Settlement Gauge Results

MONITORING SYSTEM LESSONS LEARNED

This monitoring system provided real time information to Norfolk Southern to allow them to continue to operate over the bridge with confidence. Over the 11 months that the monitoring system was in service, the design team learned several key lessons regarding the monitoring system:

- It is important to have a clear and accurate understanding of the relative motion that each tilt meter reports and which direction is reported as positive or negative. The readings from multiple tiltmeters should indicate an overall movement of the bridge that makes sense rather than being viewed as independent motions compared to an alarm level.
- The alarm could be triggered by a single reading of a single gauge exceeding its alarm level. Ultimately, each alarm had to be looked at carefully by the engineer and a decision made regarding the validity of the alarm no matter what time the alarm sounded. Future installations need to include sensor error handling in the alarm trigger before sounding the alarm.
- The problem with malfunctioning tiltmeters generating false alarms indicated a need to have a backup monitoring system that could be used to easily check the current condition of the bridge without traveling to the site. A web cam is recommended for future monitoring as an independent check of the tiltmeter system.
- The settlement gauges are susceptible to solar/thermal effects. There was no place to install the fluid reservoir and lines that were not in direct sunlight. The settlement gauges were used in conjunction with the tilt meters to evaluate false alarms, however, overall reliability of these gauges is low. Future installations of fluid driven settlement gauges need to consider placement of reservoirs and fluid lines out of direct sunlight.
- The monitoring system provided a level of confidence to continue rail operations on the partially damaged bridge in the interim period despite the false alarms.

BRIDGE REPLACEMENT TYPE STUDY

The Design Team mobilized immediately after learning of the bridge's condition and set out to complete a site survey, geotechnical soil borings, and site investigation. Several options were investigated for the replacement of the existing bridge. The criteria used to evaluate the merits of the replacement options were as follows:

- The hydraulic opening for the proposed structure should not increase the 100-year flood elevation of Cotton Run.
- The replacement span should provide increased scour resistance for substructure elements.

- A maximum 24-hour track outage could be accommodated for construction of the replacement span.
- The replacement bridge should accommodate a single track operating at 60 mph.

The Design Team developed six (6) options for replacement of the bridge. Variations of each option were investigated for different construction methods.

The survey data, along with FEMA floodmaps was used to develop a hydraulic model for the watershed and bridge opening. The bridge is located on the Flood Insurance Rate Map (FIRM) for Butler County, Ohio. The length of Cotton Run is not within a detailed study area and has no published base flood elevations. The downstream end of Cotton Run is subject to backwater from Seven Mile Creek, which is in a detailed study area subject to inundation by the 100-year flood with published peak flows and base flood elevations. Therefore, the 25-year storm event with the 100-year backwater from Seven Mile Creek and the 100-year storm event with the 25-year backwater from Seven Mile Creek were analyzed in accordance with accepted methods for coincidental occurrence frequencies. This analysis was done to ensure there were no increases between the existing and proposed conditions.

An existing conditions HEC-RAS model was developed based on a detailed field survey and aerial topography of Cotton Run and its overbanks in the project area. The bridge was modeled using internal cross sections. These cross sections were modified to approximate the existing channel geometry prior to the pier settlement and temporary remediation measures.

The type study options were analyzed within the hydraulic model to determine if they would affect the 100-year flood elevation. Options that raised the 100-year flood elevation were eliminated from consideration. Each of these options were evaluated against the design criteria and ultimately the following options were eliminated:

Option 1 – ELIMINATED - Rehabilitation of the existing substructure and replacing the superstructure with new concrete box beams. The presence of the emergency response rip rap around the East Pier made the installation of a deep foundation to support and stabilize the pier difficult. This option would still leave the bridge with the original substructure elements which were nearing the end of their service life. Finally, it was estimated that this option would require at least a 40-hour track outage, which was not feasible for the railroad operations.

Option 2 – ELIMINATED – Replacing the piers with drilled shafts installed on either side of the existing piers and a straddle bent cap spanning between them. The superstructure would be replaced with concrete box beams. This option was estimated to be the least expensive, however it was also estimated to require a 36-hour outage to install the large pier straddle bents and superstructure. Significant concern about the ability to install drilled shafts through the rip rap at the East Pier while not causing further movement in the East Pier also contributed to the elimination of this option.

Option 3 – ELIMINATED – Four adjacent concrete box culverts. The Design Team could not develop a feasible arrangement of boxes within the limits of the existing abutments that did not increase the 100-year flood elevation. In addition, the time required to install the culverts was considerably more than the prescribed 24 hours.

Option 5 – ELIMIINATED – Two-span bridge replacement. This option was investigated using two different construction methods; slide-in of the superstructure during a track outage and building the bridge adjacent to the existing bridge with a temporary track shift onto the new adjacent bridge and then completing substructure construction in place of the existing bridge where the new span could slide into a final position on the existing alignment. The first construction method (the slide in) was found to be somewhat cost effective but would require more than a 24-hour outage to install. The second construction method required less outage time but was considerably more expensive.

Option 6 – ELIMINATED – This option would build a new permanent alignment adjacent to the existing bridge. The new alignment would be supported by a new bridge built adjacent to the existing bridge. This option was estimated to require very little track outage, only enough time to cut and throw the tracks onto the new alignment. However, the cost associated with this work (including additional retaining walls and/or potential ROW purchase) was much higher than other alternatives.

THE BRIDGE REPLACEMENT DESIGN

The design team ultimately selected Option 4 – Replacement with a new single span bridge that was to be installed during the 24-hour track outage. This single span option utilized a through plate girder span, which reduced the structure depth and brought the bottom of steel elevation up as high as possible. New abutments would be installed in front of the existing abutments and following the removal of the existing piers would provide the required hydraulic opening and have no effect on the 100-year flood elevation of Cotton Run. The replacement bridge was estimated to cost approximately $2 Million and was designed to be constructed around the existing bridge, with prefabricated and pre-erected elements installed during the prescribed 24-hour track outage.

The new abutments are founded on two 5-foot diameter permanently cased drilled shafts. The drilled shafts were located just outside of the existing concrete box beam superstructure to allow for construction during continued rail operations. A precast abutment seat was placed on top of the drilled shafts after the existing superstructure had been removed during the track outage.

A cast-in-place concrete web wall was formed between the drilled shafts and cast-in-place concrete wingwalls were built between the drilled shafts and the existing abutment. The gap between the precast seat and the existing abutment was filled with precast wingwall panel that could be installed after the seat was positioned. The box created by the web walls and wingwalls was filled with flowable fill up to the top of shaft elevations.

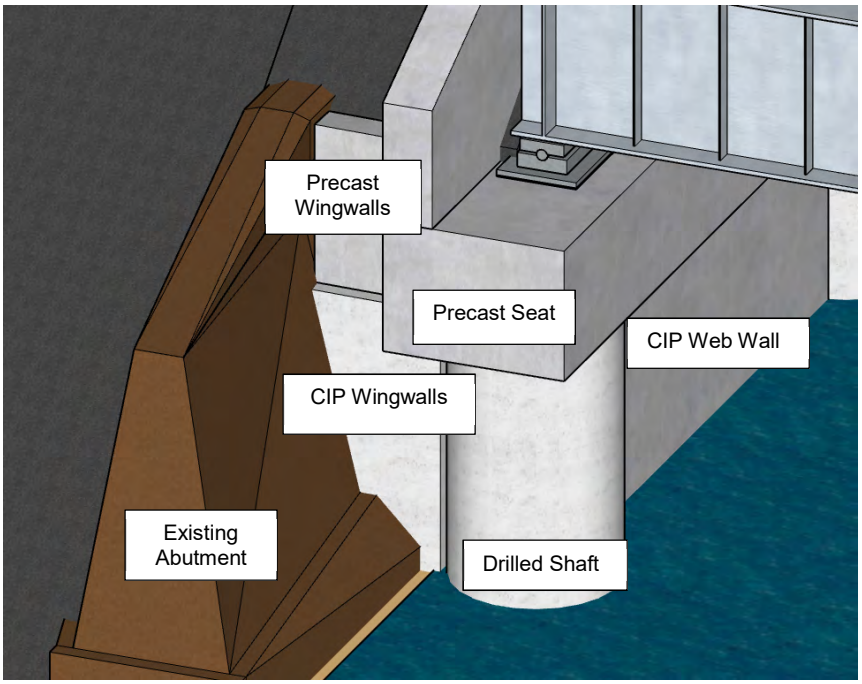

Figure 11 – New Bridge Abutment adjacent to Existing Abutment

The precast concrete abutment seats were designed to span between the drilled shafts and detailed with voids to fit over high strength threaded rods that were embedded in, and extended up from, the drilled shafts. The seats were designed for either a superstructure crane lift into place or a slide-in placement. Due to the girder bearings being centered nearly over the drilled shafts, the slide-in alternative was the

controlling design case for the seats. The threaded rods were tightened down, and the voids were grouted during the 24-hour track outage. Because the existing foundations were spread footings whose scour caused the initial emergency situation, the new drilled shafts were designed to resist all forces ignoring the contribution of the existing abutments.

The new superstructure is a single 52'-0" span through plate girder bridge. The girders were comprised of a 60" deep and 5/8" thick web and 20" x 1 5/8" flange plates. The girders were spaced 20'-0" apart which was just inside of the drilled shaft center to center spacing of 24'-0". The drilled shaft spacing was determined to allow for installation around the existing superstructure. A 4'-0" deep abutment seat on top of the drilled shafts allowed for shear transfer of the girder reaction load directly to the drilled shafts without having to design the abutment seat for large moment forces.

USE OF 3D VISUALIZATION

The abutment seat directly over the drilled shafts included reinforcement as well as anchor bolt sleeves and formed voids for threaded rods. The crowding around this connection was verified for minimum cover and spacing using Trimble Sketchup as shown in Figure 12.

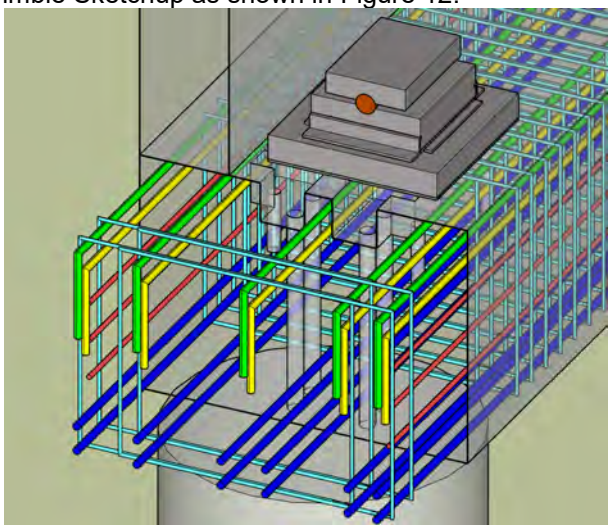

Figure 12 – Precast Seat-to-Drilled shaft connection showing reinforcement and hardware ducts

By constructing a relatively fast model of both proposed alternatives and the existing bridge, 3D visualization was further used to discuss and modify design alternatives including the abutment seat to drilled shaft connection, superstructure details and the existing to proposed abutment interface. This could all be done in real-time with engineers in remote offices to quickly understand, discuss, and reconfigure new options.

BRIDGE REPLACEMENT TIMELINE

Storm Event to Full Replacement

The emergency nature of this bridge replacement project drove the design and construction schedule. Below is a summary of key timeline elements for the ultimate replacement of the bridge.

5/24/2017	Storm and scour event
5/26/2017	Remedial repair measures installed and rail operations resume at reduced speed
6/05/2017	Replacement Type Study begins
6/28/2017	Replacement Type Study complete
7/01/2017	Monitoring System goes live
8/10/2017	90% Plans complete
8/14/2017	Permit submitted

8/30/2017	100% Plans complete
10/05/2017	Construction Bids due
11/14/2017	Permit acquired
1/18/2018	Contractor mobilized
5/21/2018	24-Hour track outage for structure replacement

24-HOUR TRACK OUTAGE FOR BRIDGE REPLACEMENT

On Monday, May 21, 2018, nearly one year after the storm event that damaged the original structure, Norfolk Southern ceased operations for 24 hours to allow for removal of the existing bridge and construction of the remainder of the abutments and the superstructure. The construction schedule called for 18 hours of track outage, with an additional 6 hours as a safety net. Complications encountered during removal of the existing concrete box spans consumed the 6 hours of float and left the remainder of scheduled work items during the outage to be completed without much "wiggle room". The failure of the pier resulted in the concrete spans rotating and locking into one another, which ultimately proved to be very difficult to unlock. The Contractor, McHugh Construction, worked to free the spans and remove them one at a time.

Once the existing spans were removed, the new precast concrete seats and backwalls were installed. The top of the drilled shafts received a layer of leveling grout and the precast seats and backwalls were lifted and set into place over the threaded bars. The threaded bar voids in the precast seat were grouted and the rocker bearings were installed. Simultaneously, precast concrete panels were placed between the back of the new backwall and the front face of the existing abutment.

The through plate girder superstructure had been assembled nearby prior to the outage. During the outage, a crane picked up the nearly 156 kip superstructure and lowered it onto the new bearings. With the new superstructure set, the void behind the backwall was backfilled, new ballast was placed on the bridge deck, and the track panel was laid on top of the new span. Norfolk Southern's track crews quickly took over the construction at this point to reconnect the rails, tamp the ballast and reset the rail alignment as needed.

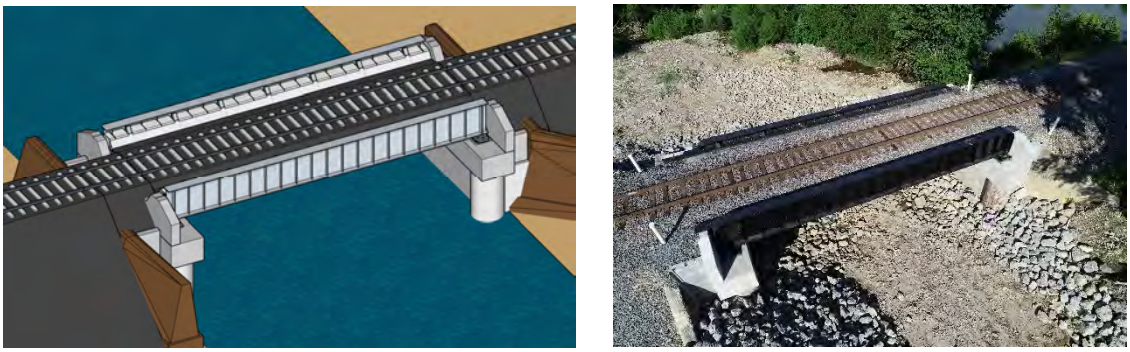

Figure 13 – Model and Photo of Completed Structure

CONCLUSION

The solution implemented by Norfolk Southern proved highly effective in responding to a difficult emergency imposed by the extreme flooding event. The temporary cribbing and comprehensive monitoring system allowed Norfolk Southern to resume operations after the flood while maintaining confidence in the safety of the bridge. The Accelerated Bridge Construction techniques, using prefabricated elements, allowed Norfolk Southern to replace the structure with only a 24-hour closure of service on this critical rail artery. The bridge used proven construction and design techniques which resulted in a cost-effective solution with minimal disruption to rail service. These techniques could be applied to other emergency bridge response scenarios.

REFERENCES

(1) McCrabb, Rick. *Journal-News*. 25 May 2017. <https://www.journal-news.com/news/flooding-the-worst-seven-mile-history/OL2S8t9BNwWbjtekfTnq8H/>.

WASHINGTON STREET (ROUTE 85) OVER THE ASSABET RIVER BRIDGE REPLACEMENT IN HUDSON, MA

Darren Conboy, P.E., Jacobs Engineering Group Inc., (617)532-4228, Darren.Conboy@jacobs.com
David Massenzio, P.E., Jacobs Engineering Group Inc., (617)963-3046, David.Massenzio@jacobs.com

INTRODUCTION

Working closely with the Massachusetts Department of Transportation – Highway Division (MassDOT), the Town of Hudson, and local businesses, Jacobs Engineering Group utilized innovative construction methods and materials including UHPC to help minimize impacts to the local community and successfully deliver a completed bridge within the required time constraints.

The existing bridge carrying Washington Street (Rte. 85) over the Assabet River, which consisted of a deteriorated three-span, masonry arch structure, is a vital link to downtown Hudson, Massachusetts. Washington Street is the primary north-south route through the commercial center of Hudson carrying 21,000 vehicles per day. The bridge was replaced with NEXT-40D beams supported on concrete abutment pile caps and micropiles. The new bridge design and construction had many challenges including complex phased relocations of utilities with utilities located in six of the seven bays, limited space for staging construction equipment and materials due to commercial properties abutting each corner of the bridge, limitations for crane placement and movement, and below-grade obstructions.

ACCELERATED BRIDGE TECHNIQUES

During the design phase, Jacobs estimated the duration of the construction tasks and durations required to demolish the existing bridge and construct the new bridge. After extensive coordination with the local community and the Town of Hudson, the full bridge closure duration was limited to 105 days, which included demolition of the existing bridge. To meet this construction duration, Jacobs employed several accelerated bridge techniques which included:

- Prefabricated substructure elements and High-Early Strength Concrete
- Precast Northeast Extreme Tee D (NEXT-D) beams
- Ultra-High Performance Concrete (UHPC)

Prefabricated Substructure Components

The bridge design included precast backwall and abutment pile caps to expedite substructure installation. The design specified embedded corrugated metal pipes (CMPs) at locations of the proposed piles. High-early strength concrete achieving 3,000 psi strength in 36 hours was required in the CMP voids. The contractor, New England Infrastructure, provided an alternative by using conventional cast-in-place construction combined with installation and testing of the piles prior to the full bridge closure. The elimination of the pile installation and testing from the full bridge closure construction window allowed the contractor to use a lengthier process of casting and curing the abutment caps and backwalls on site. The micropile installations required partial road closures and the piles were installed and tested during off-peak and nighttime hours. Once the bridge was closed, the contractor excavated the soil and cut the piles at the required elevations.

Precast substructure approach slabs and closure panels at the ends of abutments were also used to expedite construction. Closure walls at the ends of the abutment pile cap were specified to align with the existing canal walls on each side of the bridge. The closure walls were designed to facilitate permanent

relocation of Verizon fiber cables. Prior to the full bridge closure, utilities crossing the bridge were relocated to a temporary utility bridge constructed on the west side of the existing bridge. The closure walls consisted of top and bottom precast panels. The bottom panel was installed with the abutment pile caps and the upper panel was not installed until the Verizon cables were shifted from the temporary utility bridge to the new abutment backwalls during the full bridge closure. All other permanent utility relocations were made after the bridge was re-opened to traffic.

Precast Northeast Extreme Tee D (NEXT-D) Beams

The NEXT-D beams are constructed with 8-inch thick flanges, which serve as the roadway deck (see **Figure 1** for the bridge transverse section). This reduced overall construction duration by eliminating the need for a typical cast-in-place concrete roadway deck. The NEXT-D beam shape also provided the opportunity to pre-install the new utilities between the stems of the members at the precaster's facility, greatly expediting the utility relocation. NEXT-D beams offered other benefits, including no requirements for painting and minimal future maintenance.

The proposed bridge geometry limited the width of the new beams, and the 85-foot spans were at the upper limits of the NEXT-D capacity. To meet the AASHTO and MassDOT prestressed beam design requirements, a concrete compressive strength of 10,000 psi was required. Although used in neighboring states, this was MassDOT's first use of 10,000 psi concrete mix for precast concrete beams.

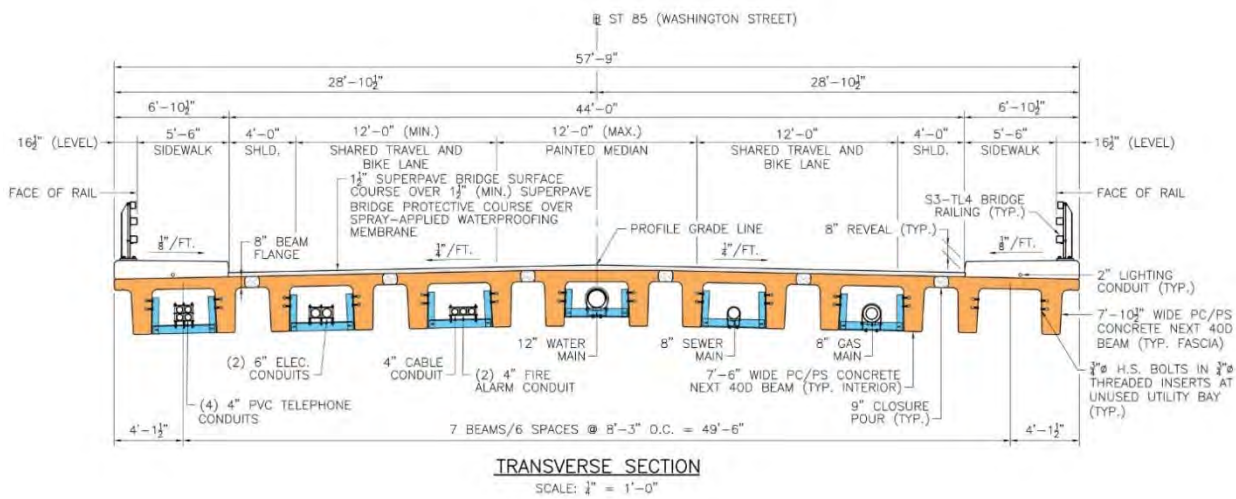

Figure 1. New Bridge Cross-Section

Ultra-High Performance Concrete (UHPC)

The bridge geometry necessitated the use of narrow cast-in-place concrete closure pours between the adjacent beam flanges. Due to the reduced closure pour widths and to achieve high strength rapidly, Jacobs and MassDOT elected to use Ultra-High Performance Concrete (UHPC) for the closure pours. The Hudson bridge project is one of two projects that used UHPC in Massachusetts as part of the FHWA Every Day Counts – 4 program. During design, extensive coordination was required with MassDOT and LaFarge, the supplier of the Ductal JS1000 Joint Fill, to develop the UHPC specifications. A mock-up of the joint was required to evaluate the bond between the UHPC and the beam flanges, and to closely mimic production placement conditions.

After field-casting the closure pours, the UHPC attained minimum compressive strengths of 11,070 psi within 3 days, and the design compressive strength of 14,000 psi within 7 days. The 28-day compressive strength was 21,580 psi.

CONCLUSION

The existing bridge was demolished, and the new bridge was installed and opened to vehicular and pedestrian traffic in 85 days, 20 days sooner than the pre-negotiated outage length. The existing bridge was demolished in 2 weeks; the substructure was constructed in 3 1/2 weeks; and the superstructure was completed in 6 1/2 weeks. Total construction cost, including approach roadway work, was $4.7 million.

The project demonstrated that through proper planning and effective use of accelerated bridge construction techniques, the impacts of needed bridge construction can be greatly reduced even on relatively small-scale projects. This project not only solved the critical needs of Hudson and the region ahead of schedule but also proved the efficacy of UHPC application for future bridge projects throughout Massachusetts.

The presentation will discuss Jacobs' experience on the project and the design and construction challenges that were met through the use of NEXT beams, UHPC and prefabricated bridge elements. Careful preparation and coordination were required to make the application of UHPC successful. UHPC and additional construction materials required Jacobs to work closely with the MassDOT Research and Materials Department to develop a new suite of material and construction specifications. Discussion will include how those piloted requirements for the prefabricated bridge elements, UHPC and concrete mixes were developed, evaluated and their final outcome.

LIGHT WEIGHT DESIGN OF BENT CAPS IN MUNICIPAL BRIDGE ENGINEERING

Hao Hu, Ph.D., Shanghai Urban Construction Design & Research Institute (Group) Co., Ltd., huhao@sucdri.com
Liang Zhou, Chief Engineer, Shanghai Urban Construction Design & Research Institute (Group) Co., Ltd., zhouliang@sucdri.com
Yuanchun Lu, Chief Bridge Engineer, Shanghai Urban Construction Design & Research Institute (Group) Co., Ltd., luyuanchun@sucdri.com
Xingfei Yan, Assistant Chief Engineer, Shanghai Urban Construction Design & Research Institute (Group) Co., Ltd., yanxingfei@sucdri.com

ABSTRACT

Prestressing concrete bent caps with long cantilevers are usually applied in municipal bridge engineering. However, large volume and heavy weight of bent caps put forward higher requests to transporting, handling, and assembling once precast elements are adopted instead of cast-in-place ones. To decrease the weight of bent caps, three structural schemes aimed at practical six-lane superstructures frequently used in China are proposed in this paper. Preliminary test results revealed that all the schemes are easy to construct and fairly effective in decreasing the weight of bent caps, which is very important for the development of precast segmental construction technology.

INTRODUCTION

The precast segmental construction technology has been widely adopted all over the world for the advantages such as improved construction speed, safety and quality, minimized traffic disruption and environmental impact (1). In municipal bridge engineering, the superstructures are usually wide enough to satisfy the increasing traffic quantity. Accordingly, prestressing concrete bent caps with long cantilevers are chosen as substructures to make full use of the space under the bridge. However, large volume and heavy weight of precast concrete bent caps usually make them difficult to transport, handle, and assemble.

Many creative schemes were proposed in order to decrease the weight of precast bent caps. Inverted T-type section was used for the bent cap by Billington (2). The web of the bent cap was made hollow to decrease weight except on the column tops and at the beam ends, where the prestressing tendons were anchored. Calculated results indicated that the maximum length of the bent cap could reach 13.1m and 27m for the single-column and dual-column pier, respectively. However, for the dual-column frame pier, the bent cap should be divided into two segments and connected by wet joints in the middle after being handled in position. Another precast system was developed by Washington State Department of Transportation (3), in which the bent cap was divided into two parts vertically and formed through two steps. The bottom part was precast in the first step and the top part was cast in place on site in the second step. The semi-precast bent cap was applied in the railway track project of Singapore. The outside shell was precast at first, while the internal concrete was cast in place on site using the precast shell as formwork.

In China, six-lane and eight-lane superstructures are extensively employed in municipal bridge engineering, and the corresponding bent caps are normally large in volume and heavy in weight. Obviously, a monolithic bent cap with solid section exhibiting better integrity and carrying capacity is desired. However, in this case, special transport and hoisting equipment were demanded for the bent cap weighting more than 300 tons, which could seriously affect the economic performance of the precast bent caps. Therefore, lightweight design is key to realizing the precast of bent caps. Currently, the common way is to divide the bent caps into two or three segments in the direction perpendicular to the bent cap central line, and then the segments are connected together on site by post-tensioning prestressing tendons (4). Temporary shoring and elevated formworks are needed when a certain width of wet joints was set in the middle, making it tedious to construct and time-consuming to cure. Epoxied joints could also be used to divide the bent cap into three segments, and the joints were then located on the

cantilever. In this way, wet joints could be avoided, nevertheless, the joints should bear large bending moment and shear force.

Due to the disadvantages in the schemes mentioned above, new methods to decrease weight of precast bent caps are long desired, which to some extent can speed up the development of accelerated bridge construction in municipal engineering.

STRUCTURAL SCHEMES

All the schemes were proposed based on a practical project located in Zhejiang Province in China. In the prototype, the six-lane superstructure consisted of 6 small box girders, and the diamond-type section was adopted for the bent cap for better landscape effect. Each bent cap shown in Fig. 1 weights more than 300 tons, which is definitely too heavy to transport. Therefore, the bent cap was divided into two segments in the direction perpendicular to the bridge central line. The precast dual-column pier was connected with the bent cap by grouted splice sleeves (GSS) embedded in the bent cap. The bent cap was made of C60 concrete defined in the Chinese code (5), which had a cube compressive strength of 60 MPa. In the premise of similar carrying capacity, all the schemes were proposed to simplify the construction process and decrease the weight of bent caps as much as possible.

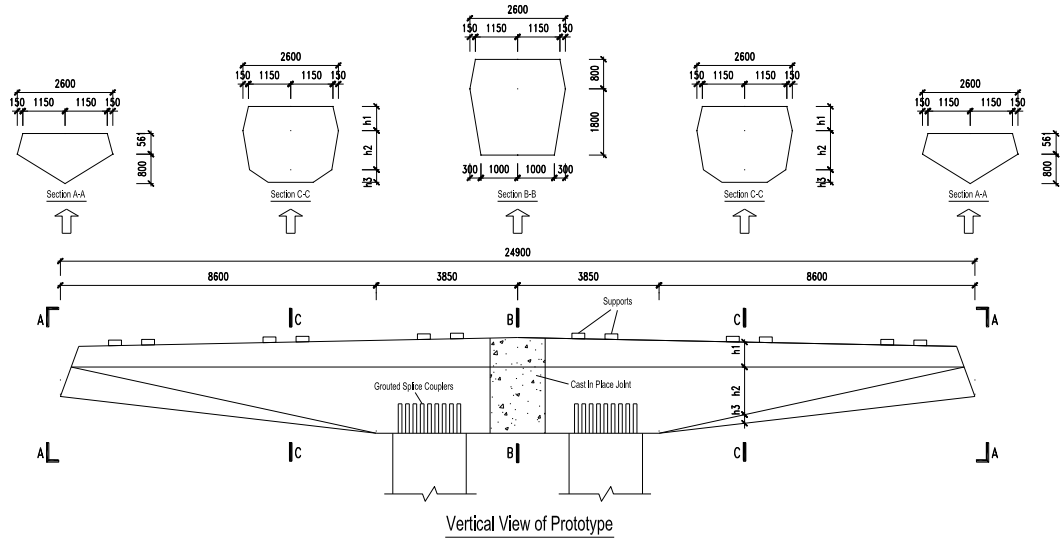

Fig. 1. Configurations for Prototype Bent Cap (millimeters)

Scheme 1

Diamond-type section was used in Scheme 1, which was the same as the prototype. However, the bent cap was divided into two equal segments in the direction parallel with the bent cap central line. The segments were precast separately and then transported to the construction site. As shown in Fig. 2, wet joints were placed longitudinally only near the supports and column tops, and the transverse U-type reinforcements were used to connect the two segments in these positions. The connection was able to ensure integrity of the two segments under external loads because the torsion effect in the bent cap is not obvious. The internal side surfaces of the segments near the bottom edge were filleted to avoid formworks when the wet joints were cast in place, and thus speeding up the construction process.

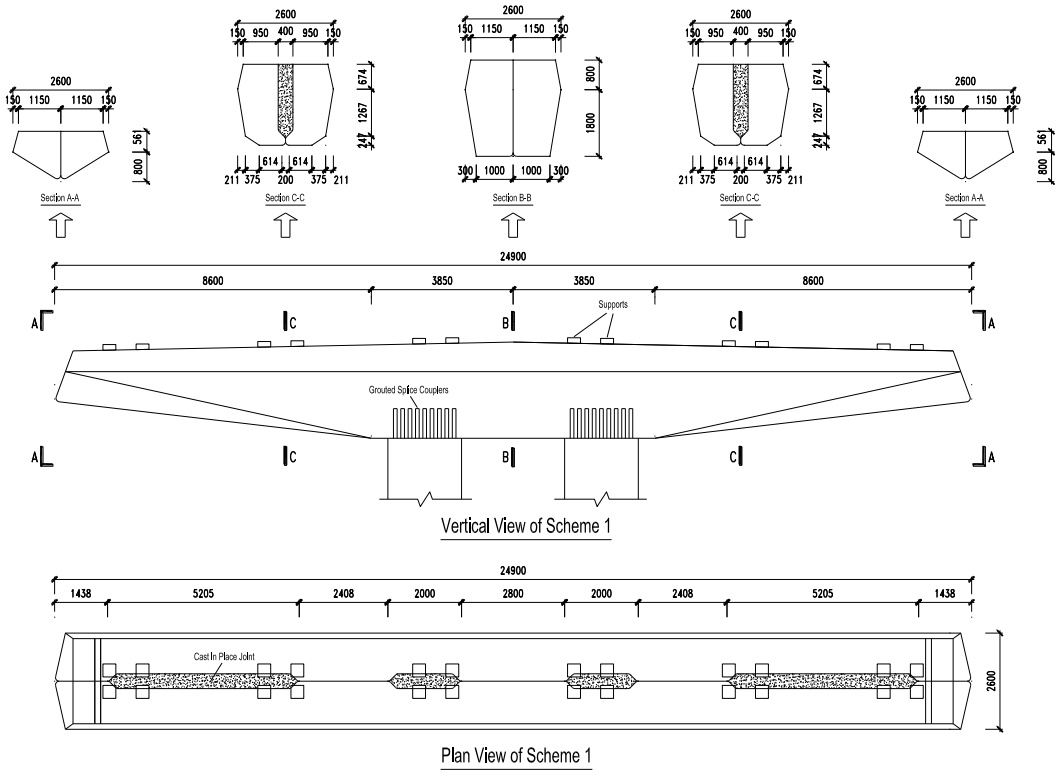

Fig. 2. Configurations for Scheme 1 (millimeters)

Scheme 2

As shown in Fig. 3, U-type section was used for the bent cap in Scheme 2. In this way, not only the weight was reduced, but also the internal steel formworks could be removed and reused after hardening of concrete. The section of the bent cap was solid on the column tops to facilitate the connection between bent cap and columns. The section under the supports was also solid to relieve stress concentration. At the beam ends, many post-tensioning prestressing tendons were anchored and the solid section was introduced again to resist localized compression. As a result, there were 5 internal cavities totally in the bent cap, and the size of the cavities was determined according to the calculation results specified on the Chinese code (5). In order to decrease the weight as much as possible, the C80 concrete defined in the Chinese code (5) was adopted. Compared with the prototype, Scheme 2 could reduce as much as 30% weight of the bent cap.

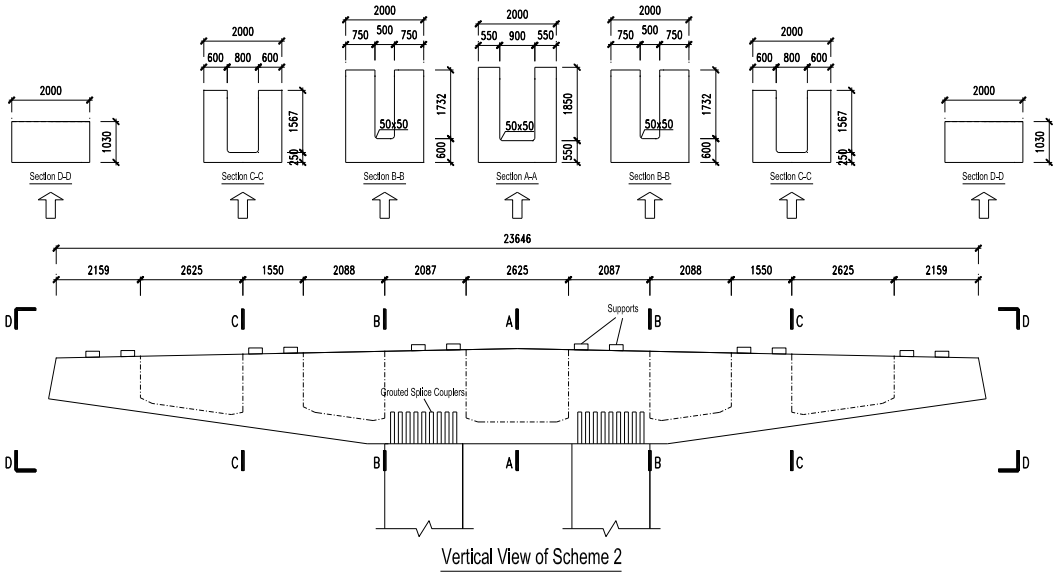

Fig. 3. Configurations for Scheme 2 (millimeters)

Scheme 3

As shown in Fig 4, inverted U-type section was used for the bent cap in Scheme 3. The internal steel formworks could also be removed and reused after hardening of concrete in this way. The section of the bent cap at the positions such as column tops, under the supports, and beam ends was solid due to similar reasons mentioned in Scheme 2. In order to decrease the weight as much as possible, the C80 concrete was adopted again. Compared with the prototype, Scheme 3 could reduce as much as 20% weight of the bent cap. The weight decreasing percentage in Scheme 3 is lower than that in Scheme 2 mainly because the bent cap with long cantilevers was under negative moment. Therefore, the U-type section was more reasonable than inverted U-type section from the aspect of mechanical analysis. However, compared with Scheme 2, the arrangement of supports in Scheme 3 could be more flexible. Besides, in the inverted U-type case, there is no need to worry about any unexpected foreign substances falling down into the boxes from the superstructures.

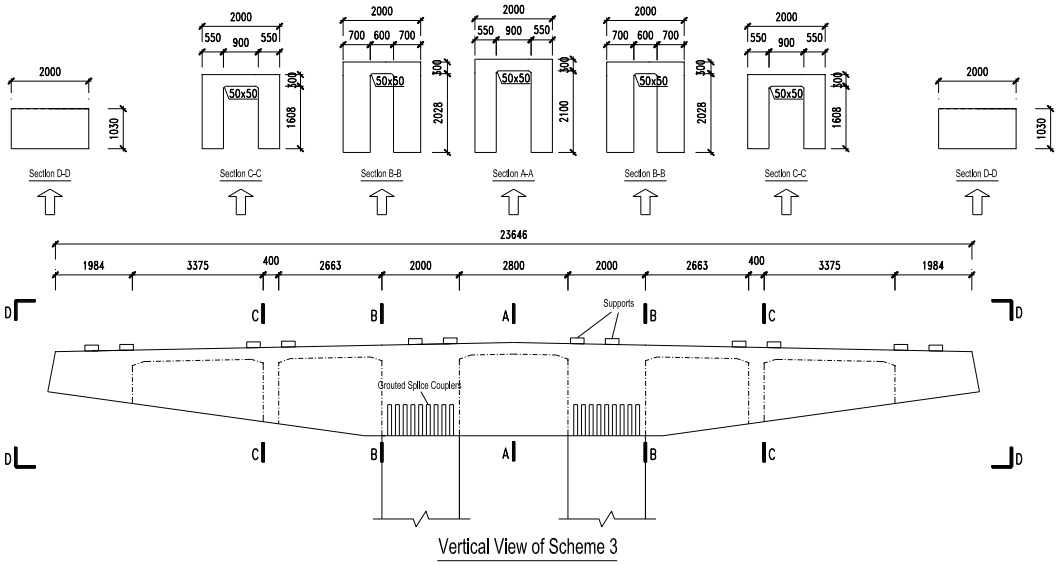

Fig. 4. Configurations for Scheme 3 (millimeters)

PRELIMINARY SUPPORTING TESTS

Design of Specimens

Five scaled specimens were designed as indicated in Table 1. Specimen 1 simulating the prototype bent cap was set as a comparison, and the other specimens were designed to simulate the schemes mentioned above. According to the loading features of the bent cap with long cantilevers, there are numerous prestressing tendons needed in order to resist the large negative moment that exists at the root of the cantilever. For each bent cap in this test, internal tendons consisting of 24Φ_s15.2 (each with a nominal diameter of 15.2 mm, a nominal section area of 140 mm^2, and consisting of 7Φ5 steel wires) were arranged in three rows vertically and placed symmetrically with the centerline of the bent cap. If all the prestressing tendons were tensioned at one-time directly in precast factory, it would cause large tensile stresses near the bottom surface of the bent cap at the root of cantilever, and the concrete would crack severely before the tests. In practical engineering project, the prestressing tendons are also tensioned in two batches. The first batch is finished in the precast factory and the second batch is done after the superstructures are hoisted in position on site. However, it is very inconvenient and time-consuming to tension the tendons in two batches in tests. In order to tension all the prestressing tendons at one-time, two thick steel plates were fixed at the bent cap ends so that 4Φ_s15.2 externally prestressing tendons could be arranged near the bottom surface of the bent cap. These external tendons were temporary, they were added to decrease the tensile stresses near the bottom surface of the bent cap at the root of cantilever, which was caused by the internal prestressing tendons. The external tendons were removed once a certain level of load was applied on the top surface of bent cap by hydraulic jacks in laboratory.

Table 1. Test Parameters

Specimen	Specimen Type	Section Type	Concrete Grade	Scale Ratio
1	Segmentally Precast—Prototype	Diamond-shaped	C60	1:3.08
2	Segmentally Precast—Scheme 1	Diamond-shaped	C60	1:3.08
3	Integrally Precast—Scheme 2	U-shaped	C60	1:3.24
4	Integrally Precast—Scheme 2	U-shaped	C80	1:3.24
5	Integrally Precast—Scheme 3	Inverted U-shaped	C80	1:2.92

Note: The strength grade of concrete in the table is defined in Chinese code. C60 concrete has a cube compressive strength of 60MPa, while C80 concrete has a cube compressive strength of 80MPa.

Fabrication of Specimens

All the specimens were fabricated in the precast factory. There were two supporting columns for each bent cap to simulate the commonly used precast substructures in municipal bridge engineering in China. The columns and the bent cap were precast separately. For Specimen 3-5, timber formworks were used to form the internal cavities in the bent caps and removed after hardening of concrete. For Specimen 2, the longitudinal joints between the two bent cap segments near the supports and column tops were filled with high-strength cementitious grout. To facilitate the assembly of the bent cap and the supporting columns, a 10 mm bedding layer was formed between the bent cap and the columns. High-strength cementitious grout with a compressive strength of 80 MPa was pumped into the bedding layer. Subsequently, they were jointed together by placing the bent cap on the top of the supporting columns with protruding bars being inserted into the GSS embedded in the bent cap. 24 hours later, after the hardening of the cementitious grout in the bedding layer, high-strength cementitious grout was pumped through the couplers using inlet ports at the bottom of the column until it flowed from the outlet ports at the top of couplers. Finally, the ports were plugged and the assembly process was completed. After tensioning of all the tendons to the designed stress level, they were anchored at the predetermined positions. Finally, all the embedded ducts were grouted.

The fabrication process of the specimens is shown in Fig. 5.

Fig. 5. Fabrication of specimens: (a) steel cages; (b) PT ducts; (c) concreting; (d) assembling; (e) grouting; (f) prestressing

Test Setup and Loading Method

The specimens were loaded vertically in the similar manner as practical bent caps. As a result, six concentrated loads were provided by six hydraulic jacks at the positions corresponding to the supports of superstructures. In order to consider the adverse effect of torsion induced by vehicular load, all the concentrated loads were arranged eccentrically. The eccentric distance was also determined according to the maximum offset of the supports from the bent cap centerline in the prototype. Four load cases were considered as illustrated in Table 2 in this test. After that, all the specimens were loaded to final failure. After each load case, the machine was operated intermittently to maintain a constant load while the cracking of the specimen proceeded. The strain on the concrete, stirrups, reinforcements, prestressing tendons, and deflections were measured, and the crack patterns were noted during the test. The test setup is shown in Fig 6.

Table 2. Load Cases

Load Case	Load Type	Chinese code (5)	AASHOTO code (6)
1	1.0D	Construction stage load	
2	1.0D+0.7L	Frequent load combination	Service limit state
3	1.0D+1.0L	Standard load combination	—
4	1.2D+1.8L	Basic load combination	Strength limit state

Note: D denotes dead load from the superstructures, and L denotes the vehicular load.

Fig. 6. Test setup.

Preliminary Test Results

The tests on Specimen 1-3 as list in Table 1 have been completed, while the tests on Specimen 4-5 were still underway. All the specimens were not cracked under Load Case 3 as illustrated in Table 2, which means the specimens satisfied the crack resistance requirements under service limit state as defined in the Chinese code (5). Finally, Specimen 1 and Specimen 2 failed in the similar way as shown in Fig 7(a) and Fig 7(b), respectively. The failure crack initiated from the top surface of the bent cap at the root of cantilever and propagated downward. Upon failure, the concrete near the bottom surface of the bent cap at the root of cantilever crushed and the failure was dominated by combined flexure and shear. Specimen 1 and Specimen 2 failed under the load that corresponds to 2.3 times and 1.8 times basic load combination, respectively. It means that dividing the bent cap into two segments along the bent cap centerline as indicated in Scheme 2 might decrease the carrying capacity of bent cap slightly. However, it still completely satisfied the carrying capacity requirements under strength limit state as defined in the Chinese code (5). For Specimen 3, the failure crack initiated from the top surface of the bent cap near the outermost loading point and extended obliquely downward at an angle of 40 degrees with the horizontal line. Finally, Specimen 3 failed under the load that corresponds to 1.5 times basic load combination, and the failure was dominated by combined shear and torsion. Because there was no enough space for all the prestressing tendons to anchor at the bent cap ends, the bottommost row of prestressing tendons had to be anchored on the bottom surface of the bent cap. The concrete there was removed to form the anchor block, which also caused localized damage. Therefore, the anchorage zone of the bottommost prestressing tendons should be strengthened in the further test. In general, the carrying capacity of Specimen 3 still satisfied the requirements of Chinese code (5).

(a)

(b)

(c) 

Fig. 7. Failure modes of the specimens: (a) Specimen 1; (b) Specimen 2; (c) Specimen 3.

CONCLUSIONS

To decrease the weight of precast bent caps with long cantilevers utilized in municipal bridge engineering, three creative schemes were proposed in this paper and preliminary tests were also conducted. The following conclusions can be drawn:

1. Dividing the bent cap into two equal segments along the bent cap centerline could avoid elevated formworks and temporary shoring on site, thus saving time and cost. The segments could be connected by the longitudinal wet joints, which were placed longitudinally only near the supports and column tops.
2. By using U-type and inverted U-type section, internal cavities could be reserved in the cap beam and the internal formworks could be removed and reused. In order to maximum the size of the cavities as much as possible, high strength of concrete could be adopted. Consequently, 30% and 20% weight could be reduced for U-type section and inverted U-type section, respectively.
3. Preliminary test results revealed that Scheme 1 and Scheme 2 satisfied both the crack resistance requirements under service limit state and the carrying capacity requirements under strength limit state as defined in the Chinese code. However, the anchorage zone of the bottommost prestressing tendons in Scheme 2 should be strengthened to avoid localized damage.

ACKNOWLEGMENT

This work was supported by Science and Technology Commission of Shanghai Municipality (Grant No. 17DZ2251900, 19XD1432400), Ministry of Housing and Urban-Rural Development of the Republic of China (Grant No. 2018-K9-039), and also supported by the funded program of “Super Postdoctor” in Shanghai Province.

REFERENCES

1. Khan M A. Accelerated bridge construction. 2015.
2. Billington, S. L., R. W. Barnes, and J. E. Breen. 1999. “A precast segmental substructure system for standard bridges.” PCI Journal. 44 (4): 56–73.
3. Khaleghi B., Schultz E., Seguirant S., et al. 2012. “Accelerated bridge construction in Washington State: From research to practice.” PCI Journal, 57(4):34–49.
4. Hongya Qu, Tiantian Li, Zhiqiang Wang, Hongyi Wei, Jiawei Shen, Hao Wang. 2018. “Investigation and verification on seismic behavior of precast concrete frame piers used in real bridge structures: Experimental and numerical study.” Engineering Structures, 154: 1–9.
5. Ministry of Transport of the People’s Republic China. 2018. “Code for Design of Highway Reinforced Concrete and Prestressed Concrete Bridges and Culverts.” JTG D3362-2018, Beijing, China. (in Chinese)
6. AASHTO. 2017. AASHTO LRFD bridge design specifications. 7th ed. Washington, DC: AASHTO.

FINITE ELEMENT MODEL FOR A NOVEL DEMOUNTABLE SHEAR CONNECTOR FOR STEEL-CONCRETE COMPOSITE BRIDGES

Eirini Tzouka, University of Southampton, (+44) 07546738952, E.Tzouka@soton.ac.uk
Sheida Afshan, University of Southampton, (+44) 0238059 3947, S.Afshan@soton.ac.uk
Mehdi M. Kashani, University of Southampton, (+44) 0238059 8873, Mehdi.Kashani@soton.ac.uk
Theodore L .Karavasilis, University of Patras, (+30) 2610997725, karavasilis@upatras.gr

INTRODUCTION

A three-dimensional finite element (FE) model is developed to investigate the behavior of a novel demountable shear connector for precast steel-concrete composite bridges. The connector uses high-strength steel bolts, which are fastened to the steel beam with the aid of a special locking nut configuration that prevents the slip of the bolts within their holes. The connector allows bridge disassembly and offers high level of prefabrication. In terms of sustainability, the novel shear connector facilitates the replacement of deteriorating bridge components and therefore extend the bridge design life. The accuracy of the proposed FE model is validated by comparing its results with experimental results available in the literature. Parametric studies are performed to evaluate the effects of significant parameters on the behavior and the capacity of the shear connector.

FINITE ELEMENT MODELS

Development of the FE models

Details of the geometry of the push out specimens, used in the FE Analysis, are shown in Figure 1. Because of the symmetry of the specimens, only one quarter of the push-out test arrangement was modeled. Eight-node linear hexahedral solid elements with reduced integration and hourglass control (C3D8R) were used to model all the parts of the shear connector, except from the reinforcing bars, which were meshed using two-node linear three dimensional truss elements. For computational efficiency,a coarse mesh was adopted for the overall push-out specimen, with a fine mesh being used for the region around the shear connector.

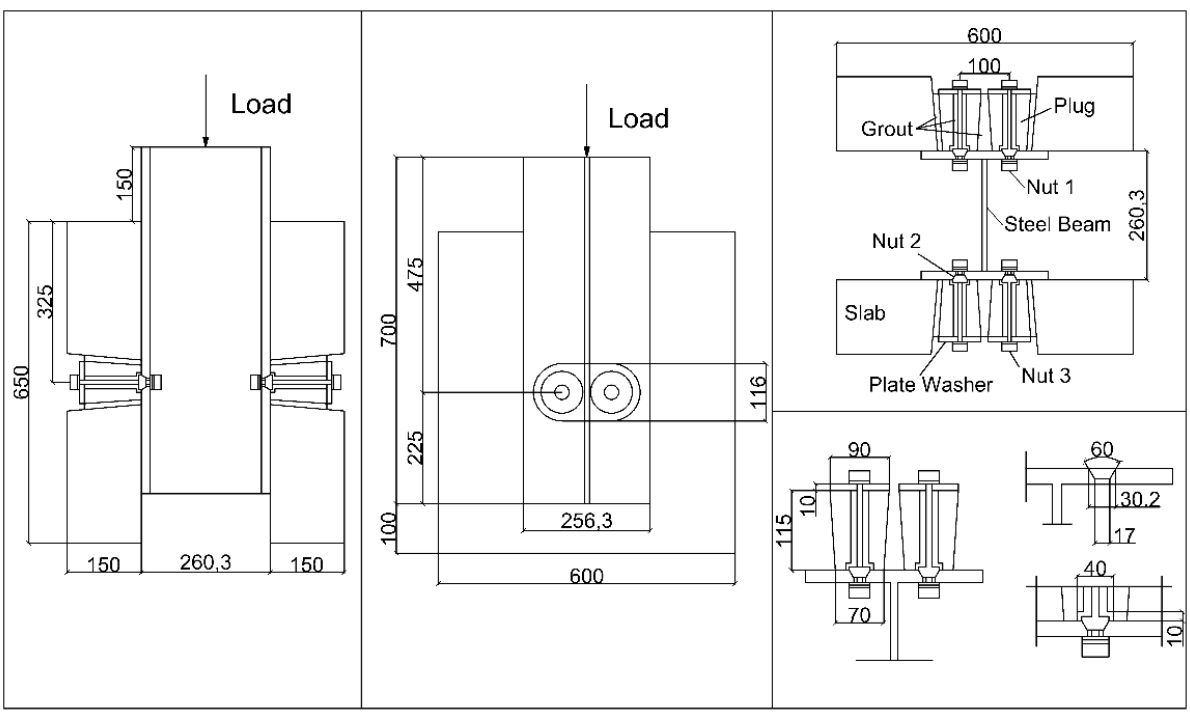

Figure 1. Details of the push-out test specimens

The surface-to-surface contact interaction was used to model the interactions between the various components of the LNSC connectors. 'Hard' and 'Penalty' options were used to describe the normal and tangential behavior between the contact surfaces, respectively. The embedded constraint option was applied to the reinforcing bars and concrete slab, in order to constrain the translational degrees of freedom (DOF) of the nodes on the rebar elements to the interpolated values of the corresponding DOF of the concrete elements. The boundary conditions used in the FE analysis represent the actual restrains of the specimens. For the quarter models, two planes of symmetry were taken into consideration, while all nodes at the bottom end of the concrete slab were restrained against all degrees of freedom.

Material Properties

A plastic model with von Mises yield function, associated plastic flow and isotropic hardening was used to model the steel beam. The bilinear plus nonlinear model proposed by Yun et al. (2) was used to describe the material behavior. For the reinforcing bars, a simpler elastic-perfectly plastic model, without strain hardening and yield strength equal to 500MPa was employed.

The stress-strain relationship of high strength bolts was defined using the material property data obtained from standard tensile tests conducting by Suwaed et al. (1). Standard tensile test models were built in Abaqus software in order to evaluate the behavior of high strength bolts. Damage initiation criteria and damage evolution models were employed in the analysis to take into account the degradation of the material stiffness and capture the stain localization in the neck region of the specimens.

Concrete Damage Plasticity (CDP) model was used to simulate the behavior of concrete materials; plugs, slabs and grout. The uniaxial stress-strain relationship proposed by Carreira & Chu (3) was used for concrete slabs and grout in compression, while plug's material properties were defined using the modified uniaxial stress-strain relationship for high strength concrete proposed by Hsu & Hsu (4). Hillerborg's fracture energy theory (5) was adopted for the tensile behavior of concrete parts, in order to minimize the mesh sensitivity of the results.

To take into account the complex nature of passively confined concrete, key material parameters were included. The ratio of the compressive strength under biaxial loading to uniaxial compressive strength (f_{b0}/f_c') was determined using the research findings of Papanikolaou and Kappos (6). The ratio of the second stress invariant on the tensile meridian to that on the compressive meridian (K_c), was expressed as a function of the compressive strength of concrete by using the equation proposed by Yu et al. (7). A value of 0.1 was adopted for the flow potential eccentricity, according to Abaqus user manual recommendations. Dilation angle values for grout, slab and plugs, were iteratively calibrated to match push-out tests results.

Analysis Procedure

A quasi-static analysis was performed by using ABAQUS/Explicit solver to allow for the use of damage and failure models with element deletion. The mass of the model was increased artificially by using the mass scaling option with time increment of 0.00001 sec for computational efficiency. Both kinetic and internal energy were monitored throughout the analysis, to ensure that the quasi-static conditions are maintained; the kinetic energy was less than 5% of the internal energy. The loading of the specimens was defined in two steps, corresponding to the experimental testing. For the first step, the pre-tensioning of the bolts was simulated by using the predefined temperature field option. On the second step of the analysis, a displacement load was applied on the upper edge of the beam flange.

Validation of numerical results

The accuracy of the FE models was verified by comparing the load-slip response and the failure modes of the specimens against the experimental test results presented by Suwaed et al (1). Three specimens were used for the validation and the results are presented in Table 1. The FE model was capable to predict the three distinct stages on the load-slip behavior of the LNSC connector. In the first stage, the shear load was approximately equal to 50% of the shear resistance, while in the second stage, the shear load increased further up to 75% of the shear resistance. In this stage, gradual yield of bolts was noticed, along with crushing of the grout in front of the conical nut and bolt shank. In the last stage, the shear load reached its ultimate value with the conical nut and the bolt shank started to bear against the concrete plug. As a result, the concrete shear strains in the part of the plug that is in front of the conical nut were increased and a concrete shear failure plane formed that passed through the grout–plug-slab surface.

Table 1. Validation of the numerical results

Test number	Bolt Diameter (mm)	Plug Compressive Strength (MPa)	Shear Resistance (kN)	Shear Resistance Ratio ($f_{u,exp}/(f_{u,FE}$)
8	14	95	148.5	1.04
10	16	50	179.6	1.00
12	16	91	186.79	1.01

Parametric study

The effects of variations in the bolt pretension and the compressive strength of grout, on the shear resistance and the load-slip behavior of the connection were assessed by carrying out parametric studies and the results are presented in Table 2. The parametric results showed that the maximum shear resistance is not considerably affected by a change in the bolt pretension (the maximum shear resistance increase was less than 4%). On the contrary, the stiffness at 50% of the shear load of the specimens is significantly increased with increasing bolt pretension.

By increasing the compressive strength of the grout, the material becomes more brittle and therefore the degradation of grout with higher strength is more rapid compared to grout with low strength. Both shear resistance and stiffness of the connector were affected from a variation in grout's compressive strength. More specifically, an increase in grout compressive strength from 20MPa to 40MPa, caused a 10% decrease in shear resistance and 15% decrease of the stiffness of the specimen.

Table 2. Validation of the FE model and parametric study results

Effect of bolt pretension					
Group	Bolt pretension (kN)	Shear Resistance (kN)	Shear Resistance Ratio ($f_{u,Pi}/(f_{u,P1}$)	Stiffness (kN/mm)	Stiffness ratio ($k_{u,Pi}/(k_{u,P1}$)
P1	26	186.79	1.00	103.03	1.00
P2	40	190.98	1.02	108.19	1.05
P3	60	190.99	1.02	115.70	1.12
P4	80	194.38	1.04	119.33	1.16
Effect of grout compressive strength					
Group	Grout Compressive Strength (MPa)	Shear Resistance (kN)	Shear Resistance Ratio ($f_{u,Gi}/(f_{u,G1}$)	Stiffness (kN/mm)	Stiffness ratio ($k_{u,Gi}/(k_{u,G1}$)
G1	20	190.47	1.00	101.76	1.00
G2	28	186.79	0.98	103.03	1.01
G3	32	180.179	0.95	100.80	0.99
G4	40	171.299	0.90	85.63	0.84

REFERENCES

(1) Suwaed ASH, Karavasilis LT, Novel Demountable Shear Connector for Accelerated Disassembly, Repair, or Replacement of Precast Steel-Concrete Composite Bridges. Journal of Bridge Engineering, 2017;22(9):04017052.

(2) Yun X, Gardner L, Stress-strain curves for hot-rolled steels. Journal of Constructional Steel Research, 2017;133:(36-46).

(3) Carreira D, Chu K, Stress–strain relationship for plain concrete in compression. ACI Journal, 1985; 82:(797-804).

(4) Hsu L, Hsu C, Complete stress - strain behavior of high-strength concrete under compression. Magazine of Concrete Research, 1994;169:(301-312).

(5) Hillerborg A, Modéer M, Petersson PE, Analysis of crack formation and crack growth in concrete by means of fracture mechanics and finite elements. Cement and Concrete Research, 1976;6(6):(773-781).

(6) Papanikolaou V, Kappos A, Confinement-sensitive plasticity constitutive model for concrete in triaxial compression. International Journal of Solids and Structures, 2007;44:(7021–7048).

(7) Yu T, Teng JG, Wong YL, Dong SL, Finite element modeling of confined concrete-I: Drucker–Prager type plasticity model. Engineering Structures, 2010;32(3):(665-679).

EVALUATION OF AGING SLAB-ON-GIRDER BRIDGE RESILIENCY AFTER AN EXTREME CLIMATE EVENT USING ACCELERATED BRIDGE CONSTRUCTION

Amina Mohammed, Ph.D., P.Eng., National Research Council Canada, (613)998-8169, Amina.Mohammed@nrc-cnrc.gc.ca
Husham Almansour, Ph.D., P.Eng., National Research Council Canada, (613)993-0129, Husham.Almansour@nrc-cnrc.gc.ca
Zoubir Lounis, Ph.D., P.Eng., National Research Council Canada, (613)993-5412, Zoubir.Lounis@nrc-cnrc.gc.ca

ABSTRACT

A large number of bridge structures in North America are failing due to the combined excessive traffic loads and extreme climate events. Therefore, there is a need to enhance the resilience of aging bridges to ensure life safety and to minimize the risk of traffic distribution. This study is aimed at evaluating the resiliency of critical elements and the overall bridge system when subjected to changing climate and after an extreme climate event. The accelerated bridge construction (ABC) approaches to be incorporated for the repair of partially damage bridges or the replacement of fully damaged or collapsed bridges.

INTRODUCTION

Among the most popular short span bridge types in North America is the slab-on-girder bridges, where they have the benefits of simplicity in design, fast in construction, and the traffic-induced vibrations of the superstructure are reduced through dampers; the vibration that is transmitted to the substructure is further reduced due to the discontinuity of the superstructure/substructure joints. Increased traffic loads, coupled with the deterioration of bridges structural components due to reinforcement corrosion and other ageing processes, cause interactive and progressive damage in different structural elements. It is reported that structure deteriorations are caused by different physical, mechanical and chemical processes depending on the bridge location, environmental and operational conditions. Physical and chemical deterioration are influenced by changing climate resulting in accelerated deteriorations of the bridge elements' structural performance. Consequently, the performance and capacity of concrete and steel bridge structures are significantly affected by changing climate in terms of their safety and serviceability, in the long term, or in extreme loading. Consequently, these reductions of ultimate capacities of bridge components due to accelerated deterioration increase the vulnerability of bridge structural system to sudden collapse when the bridge system is subjected to extreme loads/ events.

Climate change is also correlated to the observed increase in frequency and magnitude of extreme climatic events, and hence, resulting in a rise of extreme climatic loads on bridges (Wang et al. 2010 [1]). Bridges could be significantly impacted by climate changes, through the increase in average temperatures, and increases in the frequency and magnitude of extreme climate events such as hot and cold waves, and storms or hurricanes. The changes in ambient and differential temperatures may lead to significant changes in the structural response of the bridge components and structural systems in terms of large deformations and high-stress levels that could exceed those allowed by existing design codes. Such effects could affect the structural integrity of the bridge system, for example; substantial differential temperature could result in damaging the composite action between the slab and girders in slab-on-girder bridges. The response of bridges to the changes in temperature caused by climate change could lead to a significant change in deformations and stresses. Also, bridges subject to extra stresses through thermal expansion & increases movement.

The climate change have been evidenced to accelerate the temperature fluctuation, freezing- thaw cycles, heat and/or humidity waves, which could highly accelerate the bridge deterioration-and-rehabilitation cycles. There is growing awareness worldwide that climate change will have significant impacts on the performance and resilience of transportation infrastructure, where bridges represent key links of the transportation networks. The intensification in frequency and/or the intensity of extreme weather events are now obvious. That future climate changes may lead to different climatic loads on infrastructure, which in

turn will lead to reduced safety, loss of serviceability, shortened service life, long service disruption, high rehabilitation and replacement costs, and significant negative socio-economic impacts. Therefore, evaluation of the instantaneous residual capacity and hence identifying the safety and serviceability of the bridge elements and structural system will enable an expedited assessment of the bridge state after a major extreme climate event. The resiliency of bridges in terms of recovery after major climate events would also involve the required level of load capacity to enhance of bridge performance avoiding its collapse under similar extreme event. This would result in ensuring the life safety and minimizing the risk of traffic distribution due to lane or complete bridge closures, and/or bridge posting.

The objective of this paper is to investigate the effects of accelerated construction/rehabilitation approaches on the enhancement of an aged slab-on-girders bridge resiliency. This resiliency enhancement is in terms of minimum recovery time when the bridge is damaged or collapsed due to accelerated deterioration with the changing climate, or an extreme climate event. The investigation is aimed at evaluating the resiliency of critical elements and the overall bridge system when subjected to changing climate and after an extreme climate event. Already developed 2D non-linear FEM model based on staged deterioration mechanisms is used to simulate the structural performance of aging slab-on- prestressed concrete girders bridge.

RESILIENCY OF DAMAGED CRITICAL BRIDGE ELEMENTS AND SYSTEMS

A resilient infrastructure system can be defined as a system that provides adequate performance against cumulative damage and extreme climatic event or stresses at an acceptable cost over its life cycle (Lounis and McAllister 2016 [2]). Resilience of civil infrastructure, such as bridges, is usually associated with the ability to deliver a certain service level even after the occurrence of an extreme event and to recover the desired functionality as fast as possible (Bocchini et al. 2015 [3]). Following excessive an extreme climate event, there is need to restore the structural performance of the bridge system to a prevent level or even to a higher performance level. In Figure 1, the blue line (solid and the dotted) represents the time history of the bridge, where its performance decreasing due progressive accumulation of damage in the bridge elements over their service life. The dotted part of the blue line represents the performance of the element if no sudden significant damage (or collapse) occurs due to an extreme event. If a significant drop of the performance due to an extreme climate event occurs, then service life of the bridge might be ended. The bridge replacement would take place, however, the required level of performance and load capacity would be changed targeting a longer service life and a higher resiliency as shown in the green lines of Figure 1.

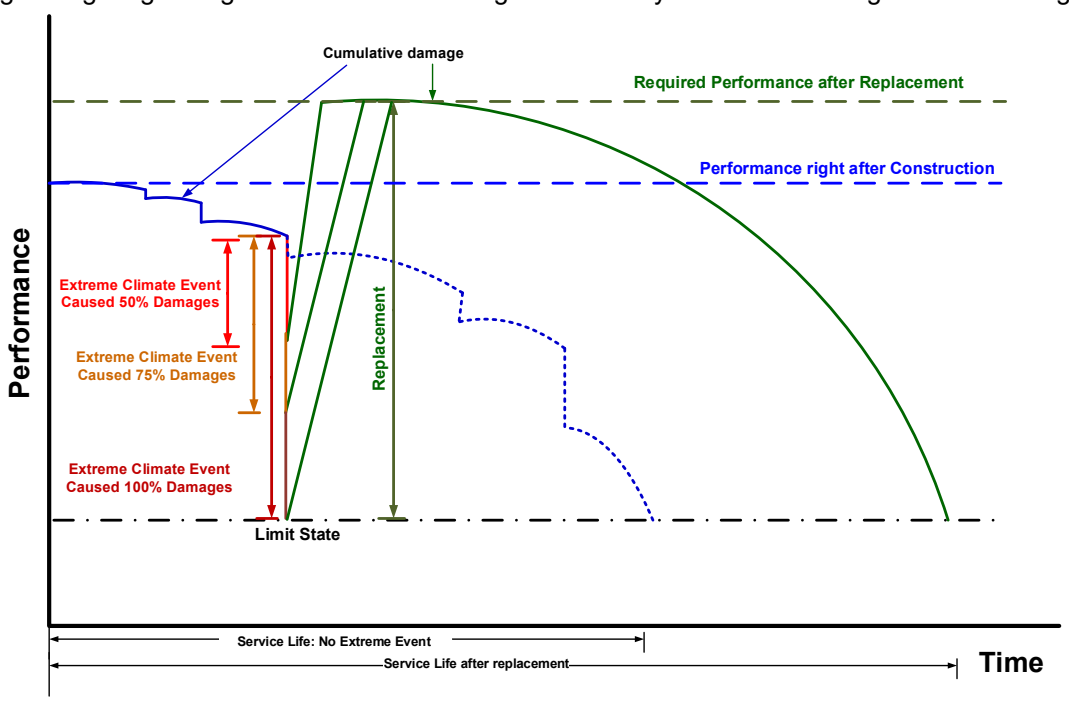

Figure 1: Schematic representation of resilient a bridge structural system

Under the previous definition of resilient structural systems, a resilient critical element of a highway bridge should provide a long service life, adequate robustness and minimal disruption of traffic with minimum life cycle cost. When an aged bridge that is affected by cumulative damages is subjected to an extreme climatic event (e.g. flood-scour, flood-ice impact, extreme ice accretion, extreme cold and heat wave), then either its structural performance dropped partially or fully (Figure 1). Then the structural performance of the element and/ or the structural system needs to be recovered either to the initial design capacity or higher. Figure 2 shows the major performance parameters of a resilient bridge element, which are the load capacity, ductility, and short recovery time. Integration of accelerated construction approaches for the rehabilitation and/ or replacement would result in fast recovery of the structural performance as shown in Figures 1 & 2. The precast-prestressed approach presents an accelerated manufacturing that will lead to deliver the required bridge element to the site in the shortest possible time. With a suitable accelerated bridge construction (ABC) in site, the recovery of service and securing the required structural performance can be achieved. Hence, the bridge resiliency is rapidly enhanced through the short recovery time targeting acceptable performance.

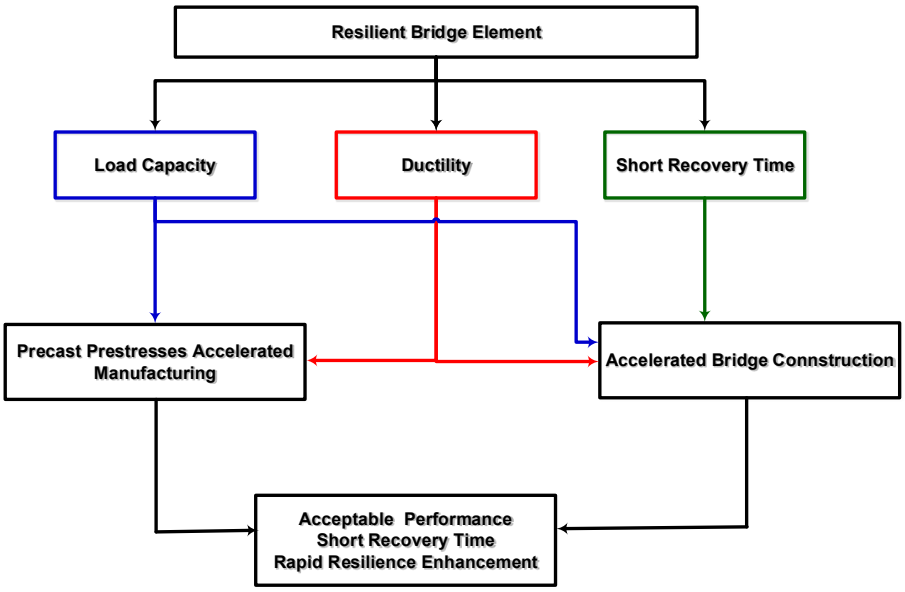

Figure 2: Framework for resilient bridge element

ESTIMATION OF RESIDUAL CAPACITY AND SAFETY OF DETERIORATED RC BRIDGE ELEMENTS

The developed 2D non-linear finite element model, FEM, model based on staged deterioration mechanisms is used, Almansour et al. 2018 [4]. The model introduces three measures of bridge resilience, namely load carrying capacity, ductility and rapid recovery of function. Essentially, it is proposed to simulate the multi-stage failure of beam-columns where the inelastic nonlinear sectional analysis as part of nonlinear finite element analysis is performed. The effect of sectional geometry, steel reinforcement and confinement of core concrete are considered in the sectional analysis level while the effect of the boundary conditions and loading patterns are applied in the structural analysis level.

The developed FEM is based on the following assumptions: (i) the concrete and steel are isotropic materials; (ii) the “local” stiffness matrix (with its 6 x 6 entries related to 3 degrees of freedom for each of the two nodes in each finite element) is established from the average of the axial and the flexural rigidities calculated over all the characteristic sections of that element; (iii) the flexural rigidity of each section is calculated from the base sectional analysis; (iv) all deformations (displacements, rotations, etc.) are continuous functions over the discretized continuum (structural element or structural system) throughout all loading steps; (v) Euler-Bernoulli beam theory is applicable in all levels of the combined gravity loads and reinforcement corrosion damage states; (vi) the model considers the instantaneous stress redistribution due to the bond loss in the corrosion damaged zone; and (vii) equilibrium is satisfied at the section level, where the instantaneous axial and flexural rigidities are effectively transferred to the element level in order

to establish the instantaneous element stiffness, and hence the global stiffness of the structure at each load step. The element stiffness matrix is established using the cross-section properties at the sectional level where the forces and stiffness are calculated using numerical integration, (Mohammed 2014[5]).

Nonlinear finite element procedure typically involves load increments. The material and geometrical properties of the elements and their characteristic sections are variable with the progress of the load increments. The equilibrium of the developed model is satisfied in every element, every section, and overall the structural system, where the numerical stability of the model and its sensitivity to the load increments, number of elements, number of sections per element, and number of cycles in the iterative approach are key parameters in the evaluation of the numerical efficiency of the finite element model, (Mohammed 2014[5]).

CASE STUDY

A typical slab-on-girders bridge has been considered. The bridge is a single span of 40.0m length measured between the centers of the bearings at the bridge two abutments. The platform width is 15.0m, which accommodate three lanes (as per the Canadian Highway Bridge Design Code - CHBDC 2014) of a CL-625 Truck live load; where the width of each lane is 3.75m. The wearing surface is assumed 90mm thick bituminous overlay, haunch is 75mm, shoulder width is 2.5 m and shoulder width on bridge is 2.0m. The bridge is assumed to have no skew or in plan curvature. The bridge superstructure consists of six pre-stressed concrete CPCI 1400 girders with height of 1.4m compositely integrated with a 0.225 m thickness reinforced concrete slab and the center-to-center spacing between girders is 2.5 m. Sectional view of the superstructure and girders is shown in Figure 3. As the detailed design characteristics of this bridge is out of the scope of this study, the focus of this paper is on the impact of accelerated construction/rehabilitation approaches on the enhancement of the bridge resiliency.

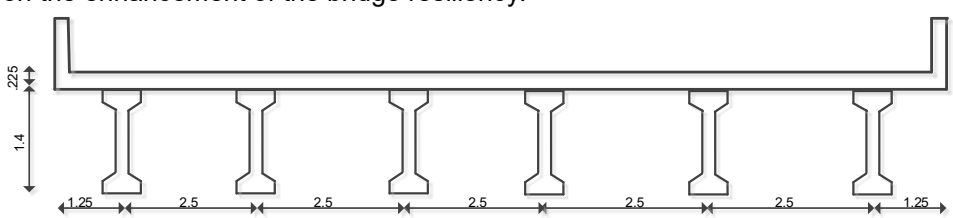

Figure 3: Elevation view of a slab-on-girders bridge (a deck with 6 girders); dimensions in m

In order to investigate the most sever failure cases that the bridge is likely subjected to during an extreme climate event, three possible scenarios are considered: (i) the bridge superstructure would be partially damage where two girders assumed to be failed; (ii) the bridge superstructure would be partially damage where three girders assumed to be failed; and (iii) the bridge would fully collapse where its substructure assumed to be failed.

As shown in Figure 4, the bridge has its full capacity as constructed when affected by the climate event (its capacity is 45,000kN.m, blue line). In each case of the two first scenarios where the bridge superstructure partially damage, the bridge capacity is calculated; in case (i) where two girders are failed, the bridge capacity is 30,500kN.m (which is almost 70% of original capacity; purple line); of course in this case and due to partial failure, the bridge width is decreased which would lead to close one or two lane traffic, however, the bridge is still under service; also, at this stage, the bridge would be repaired and recovered to have its full capacity and original performance avoiding any extra reduction and/or posting. In addition, in case (ii) where three girders are failed, the bridge capacity is 23,000 kN.m (which almost 50% of original capacity is; brown line). Again in this case and due to partial failure, the bridge width is more decreased where only one lane is under service; also, at this stage, the bridge would be repaired and recovered to have original performance.

In scenario (iii) where the bridge fully damage due to its substructure failed, two cases of damaged could be considered: case 1: one or two columns (pairs) are failed, and case 2: the superstructure is shifted due to scour and/or instability of the substructure; Figure 4 shows extreme climate event caused 100% damages where the bridge lost totally its capacity (red line). In both cases, the bridge is totally failed and posting of

service (traffic closure), also, fast recovery is mandatory where replacement of the bridge substructure is considered, green curve in the Figure 4. This will lead to ensure the bridge safety and serviceability.

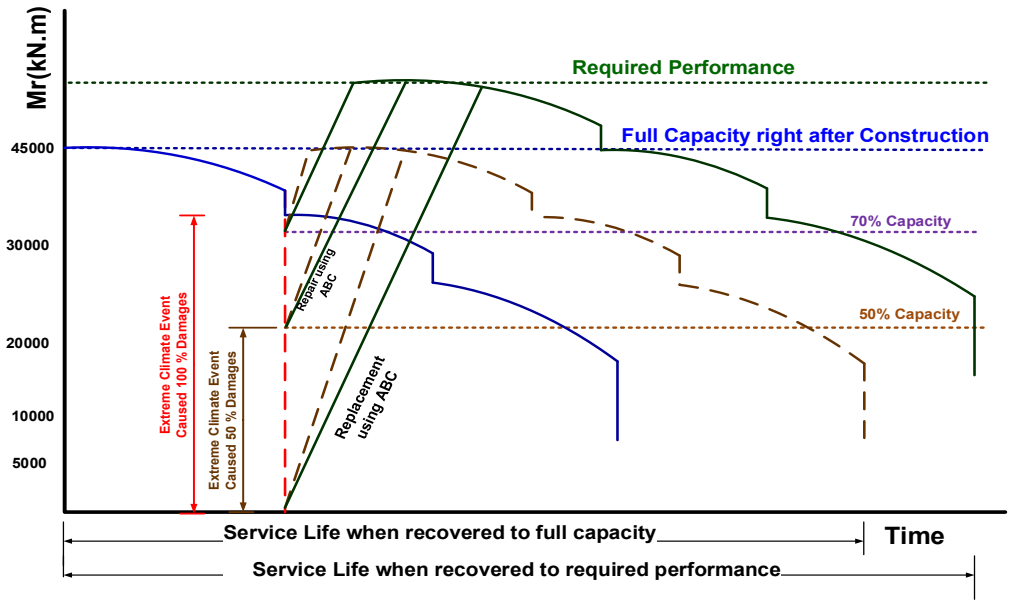

Figure 4: Relation of resilient the bridge system and rapid recovery to functionality using repair/ replacement ABC

IMPACT OF ACCELERATED CONSTRUCTION APPROACHES ON THE BRIDGE RESILIENCY

As shown in Figure 4 and previous section, it is assumed that three scenarios would resulted in partial damage or full collapse of the bridge. The three scenarios are quantitatively result in: (i) losing 30% of the bridge full capacity (the remaining capacity is 70% of the bridge design capacity); (ii) losing 50% of the bridge full capacity; or (iii) full collapse of the bridge. The recovery plan and the required capacity after the climate extreme event will be decided by infrastructure owners based on the bridge importance to the transportation network. Bridges are suggested to be categorized after a major disaster into three types based on their importance: (i) very important bridges-recovery should be immediate, where their operation is extremely important to first responders, hospitals and other essential service centers; (ii) important bridges-recovery should be fast, where their operation is important for people everyday life economically important; and (iii) other bridges, where their operation is important for economic activities and recovery of all urban activities.

The recovery time is also affected by the required performance of the bridge after an extreme event. Figure 4 shows two performance levels as a target of the performance recovery plan: (a) recovery of the bridge structural performance to the original performance level (brown lines); (b) recovery of the bridge structural performance to a higher performance level based on the bridge importance and the required load capacity (green lines). The slop of the inclined lines that are related to each damage level represent the speed of the recovery to the specified structural performance level. Figure 4 shows that if the required performance level is higher than the original design level (or after construction level) then the service life of the bridge likely to be longer.

This study suggested the accelerated bridge construction (ABC) approaches to be incorporated for the repair of partially damage bridges or the replacement of fully damaged or collapsed bridges. Precast prestressed concrete components are to be used for the replacement of all damaged bridge elements. This would reduce the negative impacts that construction operations have on traffic flow (Palermo and Mashal 2012[6]).

SUMMARY AND CONCLUSIONS

Global changes in temperature, precipitation and wind patterns threaten the integrity and functionality of reinforced concrete highway bridges. A large number of existing bridge structures in North America are vulnerable to failure due to the combined excessive aging/ deterioration and extreme climate events, including flood and resulting scour, wind, and ice loads. Hence, there is a need to enhance the resiliency of aging bridges to ensure life safety and to minimize the risk of traffic distribution due to lane closures, and/or bridge posting. In this context, this study investigates the effects of accelerated construction/rehabilitation approaches on the enhancement of an aged slab-on-girders bridge resiliency. The focus is on evaluating the resiliency of critical elements and the overall bridge system when subjected to changing climate and after an extreme climate event where the resiliency enhancement is in terms of minimum recovery. The study used already developed 2D non-linear FEM model based on staged deterioration mechanisms. A typical slab-on-girders bridge designed according to CHBDC is considered. Three possible scenarios of sever failure cases, that the bridge is likely subjected to during an extreme climate event, are considered. The first scenario is the bridge superstructure would be partially damage where two girders assumed to be failed, and remaining capacity is 70% of the bridge design capacity; the second scenario is (ii) the bridge superstructure would be partially damage where three girders assumed to be failed, and remaining capacity is 50% of the bridge design capacity; and the third scenario is the bridge would fully collapse where its substructure assumed to be failed.

From the case study, it is found based on the bridge importance to the transportation network, the recovery plan and the required capacity (after the climate extreme event) will be decided by infrastructure owners. After a major disaster, bridges are categorized into three types based on their importance and operation for economic activities and recovery of all urban activities. The categorized bridges are very important bridges, important bridges, and other bridges. In addition, the study suggested the accelerated bridge construction (ABC) approaches to be incorporated for the repair of partially damage bridges or the replacement of fully damaged or collapsed bridges.

As part of a large on-going research project at the National Research Council Canada, Construction Research Centre, different advanced materials and accelerated construction/rehabilitation approaches will be explored through a comprehensive parametric study applied to different types of bridges.

REFERENCES

[1] Wang, X., Nguyen, M., Stewart, M. G., Syme, M., and Leitch, A. 2010. “Analysis of Climate Change Impacts on the Deterioration of Concrete Infrastructure Part 3: Case Studies of Concrete Deterioration and Adaptation.” CSIRO, Canberra. ISBN 9780643103672.

[2] Lounis, Z. and McAllister, T. 2016. “Risk-Based Decision-Making for Sustainable and Resilient” Infrastructure Systems. Journal of Structural Engineering. ASCE, 142(9). F4016005.

[3] Biondini,F., Camnasio, E., and Titi, A., 2015. “Seismic resilience of concrete structures under corrosion”. Earthquake Engineering Structural Dynamics, (44).

[4] Almansour, H., Mohammed, A., and Lounis, Z., 2018. “Prediction of aged slab-on-girder bridges structural performance under changing climate hazards using their superstructure vibration”, The 6th International Symposium on Life-Cycle Civil Engineering (IALCCE 2018); Ghent, Belgium; October 28-31.

[5] Mohammed, A. 2014. “Semi-quantitative assessment frame-work for corrosion damaged slab-on-girder bridge columns using simplified finite element analysis”. PhD. Thesis, Dep. Of Civil Engineering, University of Ottawa, Ottawa, Canada.

[6] Palermo, A., and Mashal, M., 2012. “Accelerated bridge construction (ABC) and seismic damage resistant technology: a new Zealand challenge”. Bulletin of the New Zealand Society for Earthquake Engineering, Vol. 45, No. 3.

ABC SOLUTION TO BRIDGE IN WOODSTOCK VERMONT

Robert S. Young, PE, Vermont Agency of Transportation, (802) 595-2358, rob.young@vermont.gov

The Vermont Agency of Transportation (VTrans) coordinated with local officials to replace the superstructure of structurally deficient Bridge 51 carrying Vermont Route 4 over the Kedron Brook in Woodstock, Vermont. The Town Selectboard was familiar with VTrans' Accelerated Bridge Program and determined very early in the process that Accelerated Bridge Construction (ABC) techniques should be utilized to minimize impacts to area businesses and regional traffic. The challenges of the site required working next to adjacent buildings attached to the historic bridge with a sharp skew. The development of a connection detail that removed transverse post tensioning allowed the bridge to be constructed in 21 days.

ABC Flexibility

10,000 vehicles a day travel through the Village of Woodstock where the Selectboard manages the needs of both the local businesses and the transportation use of the Route 4 corridor. Woodstock Village is populated with visitors year round and the thought of construction happening in the hart of the village was a big concern. Accelerating construction activities was an obvious choice, but closing the road off to patrons was not well received. The big advantage of short duration project is the Town could choose a construction window when business traffic was slow. It was decided that the month of April worked best.

Traffic Control for Tourism

Vermont Route 4 is a part of the National Highway System (NHS) connecting the east and western parts of the State of Vermont. Bridge 51 is located in a section of the highway in the Village of Woodstock where the infrastructure is owned and maintained by the Village. The ruling members of the Board did not want truck traffic traveling through the local streets of the village, but they did not want to discourage tourist from entering the Village. A truck detour would reroute tracker trailers 40 miles around Bridge 51. At turning locations signs were added to the detour package indicating that Woodstock Village was open to encourage tourist to stay on Vermont Route 4. Service trucks and cars still had access through a local detour once they entered the Village. Local police were not shy to issue tickets to tractor trailers that "missed" the truck detour signs.

Village Construction

Once the community was on board with ABC. The design challenge could begin on the details of superstructure replacement. The existing bridge was a 1935 custom made concrete T-beam shaped to fit between existing buildings constructed on the edge of the channel.. The design span was 34ft on the downstream side and 50 ft on the upstream side. Prestress concrete solid slabs would be ideal for the span length, but the bridge had varying skews from 39 and 49 degrees. This would have made transverse post tensioning extremely difficult and time consuming, so a longitudinal closure pour connection was developed. A UHPC joint was considered early on in the design, but the high cost and coordination with an out of state subcontractor would be too high a risk for the schedule.

Connection

The longitudinal joint consisted of #4 bars with two bends that protruded beyond the edge of the solid slab. This was a simple modification of a U-bar or hairpin connection commonly used in ABC construction. The bars were aligned to stagger along the joint and 4 longitudinal straight bars were located in the void after beam placement.

Longitudinal Closure Joint

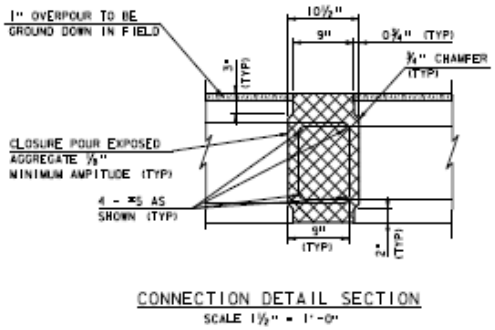

Solid Slab Prestressed Beam with protruding U-bars

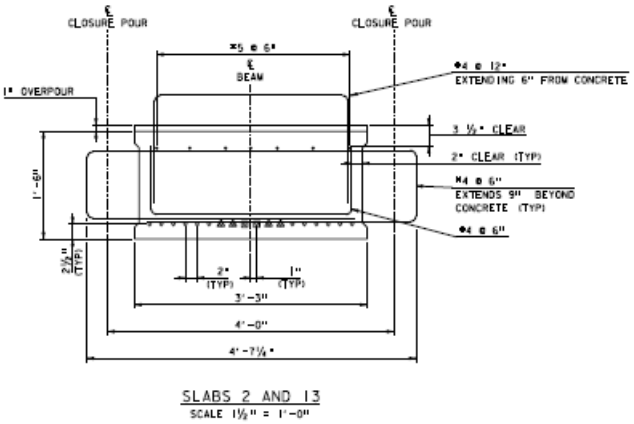

Existing Conduit To Be Lowered

Solid Slabs Placed

Underground Utilities

The existing bridge supported several underground utilities. Some could be abandoned but 5 conduits contained the region's communication wire network and were located in one bay of the existing T-beam. The conduits could not be relocated around or over the site and time did not allow for splicing through the new slabs. Since the thickness of the slabs were shallower than the T-beams at 18 inches, the bridge seat would need to be raised. This created a space where the conduits could be lowered and cast into the new bridge seat.

Cast-in-place

Yes, Vermont uses cast-in-place concrete on ABC projects. The new bridge seat and longitudinal closure pours were cast with non-proprietary high performance rapid setting concrete that reached design strength in 24 hours. A specification was developed early in the Program and has been very successful.

Large Skew Prestress Beams

The beams were placed on three bearing pads, two on one side and one on the other to achieve even bearing. The prestressing in the beams combined with the large skewed ends twists the beams out of plane when released. The three points of bearing prevent the need to shim for even contact.

First beam over utilities encased in bridge seat

Aesthetic Bridge Rail

Historic Bridge Rail and Building

After the slabs were installed a cast-in-place concrete sidewalk and bridge rail were constructed that complimented the historical character of the Village. The NHS designation required a Test Level 3 bridge rail. One aesthetic rail was already crash tested to meet both design and permitting needs of the project as well as approval from the Village. There were also concerns with the close proximity of construction activities to an adjacent historic building. Vibration monitoring was another permit requirement and care was taken to avoid damage to the building's sensitive stone foundation.

Summary of ABC success

The following tasks were performed for the Woodstock Village Bridge 51 replacement and can be used on any ABC project:

Project Manager

- Early public outreach - buy-in on closure duration and time of year
- Permitting coordination – Involve resource management early and have them involved in public meetings to determine critical path for project delivery
- Advertise early – allow time for Contractor to prepare and be successful

Project Engineer

- Use details that meet the schedule – specify curing times and note required strengths for sequencing
- Minimize details that require subs or move sub work outside of the closure period
- Construction schedule review – consult geotechnical, bridge, and construction engineers to develop reasonable schedules during design phase.

Contractor

- Submit schedules and discuss work plan and fabrication drawing submittal process shortly after award
- Identify subcontractors and suppliers on the critical path and schedule early

Resident Engineer

- Staff the project appropriate for the schedule
- Promote knowledge transfer with design engineers participating in the field to assist Resident Engineers

IDOT ACCELERATED BRIDGE CONSTRUCTION PILOT PROJECT – ILLINOIS ROUTE 115 OVER GAR CREEK IN KANKAKEE COUNTY

Chad Hodel, P.E., S.E., WHKS & Co., (217) 483-9457, chodel@whks.com

In October 2017, the Illinois Department of Transportation (IDOT) completed its first total bridge replacement project implementing Accelerated Bridge Construction (ABC) techniques with a targeted road closure period of only 72 hours. Construction Contract 66B67 consisted of replacing the structure carrying IL Route 115 over Gar Creek in Kankakee County with ABC techniques to limit traffic disruption, avert a 30 mile detour on state routes, and/or avoid costly upgrades to local roads. The successful bidder for the project was Tobey's Construction and Cartage, Inc. (Tobey's). WHKS & Co. (WHKS) was retained by Tobey's to provide structural engineering design services for numerous components necessary for the ABC project. In addition, WHKS provided on-site field representation for Tobey's during the road closure period to aid in resolving any emerging structural issues in a timely manner thereby minimizing impacts to the ABC schedule.

Illinois 115 over Gar Creek

The project was financially assisted through the Federal Highway Administration's Accelerated Innovation Deployment program that provides funding and other resources to offset the risks of applying innovative techniques to infrastructure construction. Contract plans detailed a single span, wide flange beam replacement structure supported on semi-integral abutments. ABC concepts included in the contract plans consisted of constructing the superstructure on temporary bents adjacent to the existing bridge followed by installation of several precast concrete components during the road closure period and a lateral slide procedure to move the superstructure into final alignment.

Proposed Superstructure Constructed on Temporary Bents

The abutment caps, wingwalls, bridge approach slabs, and bridge approach slab footings were all precast concrete elements that significantly diminished the need for cast-in-place (CIP) concrete and extended time periods typically required for forming, casting, and curing CIP construction. The only “concrete” cast during the road closure was high early strength concrete to join the precast abutment caps and wingwalls to the driven piling and grout shear keys for the bridge approach slabs.

WHKS worked with Tobey’s to modify details in the contract plans for the temporary bents and abutments to ensure global stability and accommodate a hydraulically driven roller system capable of sliding the proposed superstructure approximately 41 feet into final alignment in less than one hour while controlling a tight tolerance on alignment and geometry. WHKS initiated additional modifications to precast abutment and approach slab details to simplify handling and prevent cracking during lifting, as well as improve the ability to grout the connection between the precast abutments and driven piles with high strength material.

Lateral Slide Progression

Precast Concrete Abutment Cap Being Lowered onto Piles

Precast Bridge Approach Slab Driving Lane Being Lifted

The pilot project was a success in that it illustrated that ABC techniques can be employed to complete such a project in significantly less time than conventional staged construction or full road closure and is expected to serve as an example for other projects. The project further highlighted possible

improvements for reducing the necessary time to complete a similar project in less than the targeted 72 hours and possibly as short as 48 hours. Valuable insight was gained with the pilot project regarding modifications to plan details and specifications that can aid contractors and help facilitate ABC concepts. While for such projects there is often significant emphasis placed on contractors for having contingencies for items such as equipment failure, the project highlighted that it is equally important for designers to have contingency plans for various components to help facilitate the ABC schedule in the event field problems are encountered.

The lateral slide was an essential component for facilitating the complete structure replacement within the 72 hours of complete road closure. While the lateral slide was one of the highlights of the project, it is important to acknowledge the amount of time required for all other ancillary work to be completed within the 72 hours including structure demolition, pile driving, setting of precast elements, riprap placement, backfilling, asphalt placement, and guardrail installation. WHKS and Tobey's sought and succeeded in improving conceptual lateral slide details shown in the contract plans by using hydraulic powered rollers and detailing temporary support bents and precast abutments such that the lateral slide consumed very little time. This was important in ensuring there was ample time available for completing all of the other all of the other above mentioned activities required to be completed within the 72 hour timeframe.

Completed Project

RAPID REPLACEMENT OF BAYOU SARA BRIDGE SWING SPAN

Kevin Kane, P.E., Brasfield & Gorrie, General Contractors; David Knickerbocker, Ph.D., P.E., HDR Engineering, Incorporated; Matt Crawford, P.E., CSX Transportation, Israe Zizaoui, E.I.T., HDR Engineering, Incorporated

ABSTRACT

CSX's Bayou Sara Bridge swing span was approaching 100 years of age and in need of replacement. Objectives for the replacement included minimized maintenance, remote operation capability, and a premium on speed of replacement, to minimize service interruption. The rail service outage duration for the replacement of the bridge was significantly reduced as a result of several key factors. These included utilization of the longer marine outage, strategic preparations and select demolition made to the existing bridge, and the accelerated design and fabrication of a structural steel frame to facilitate immediate load transfer from the bridge to the substructure. The above noted factors made it possible to replace the swing span with a rail service outage of only 14 hours.

INTRODUCTION

As part of its ongoing program to upgrade and bring remote control capabilities to its inventory of 47 movable bridges, rehabilitation objectives are being addressed concurrently on many, including operational items and equipment, as well as structural repairs as needed. In some cases, full span replacement was the more prudent option, and this was true for the single-track Bayou Sara Bridge outside of Mobile, AL. The approach spans had been recently replaced, but the through girder swing span was fast approaching 90 years of age. Key objectives for the replacement were to minimize maintenance and allow for remote operation. It was also crucial that the rail service interruption must be very minimal during the construction phase.

This paper is a synopsis of the change-out of the Bayou Sara Bridge Swing Span, including the adjustments made during construction to meet a rail service outage reduction from 48 to 14 hours.

Background

Bayou Sara Bridge is located at Mile Post 000 658.30, on the M&M Subdivision, northeast of Mobile, Alabama (see Figure 1). It crosses Bayou Sara at the confluence of the Bayou and the Mobile River, adjacent to Twelve Mile Island, and normally accommodates up to 15 freight trains daily.

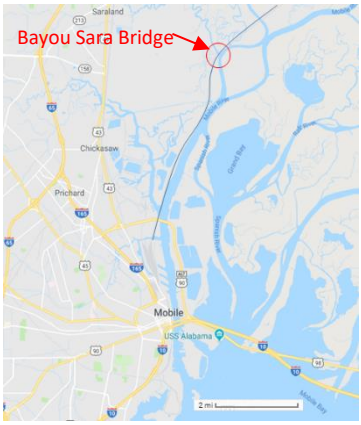

Figure 1 Bayou Sara Bridge Location

The Bayou Sara Railroad Bridge that was replaced is shown in Figure 2. Built in 1928, it comprised a 162'-2" long steel swing span consisting of built-up riveted steel through-girders, supported on the central concrete pier and two open-deck timber span approach structures of 110'-3" and 104'-2" long, respectively, composed of timber trestles on timber-pile-founded concrete cap beams. The timber approaches were first replaced in 1958 with new timber approaches, and again in 2008 with concrete box-girder spans.

Figure 2 Bayou Sara Bridge to be Replaced – Built 1928

DESIGN BASIS

As noted, the Bayou Sara swing span was reaching the end of its useful life, and so in 2014 the owner and operator CSXT, commissioned HDR to provide design services for the replacement of the entire swing span and construction of any necessary substructure.

It was determined that the replacement structure would be an open deck, steel through girder swing span designed in accordance with AREMA and CSXT Standards and clearance requirements. The design would make use of the existing substructure, with supplementation of the foundation as needed, the extent of which would be determined through soil investigation in the design phase. New mechanical systems would be hydraulically driven, including rail lifters, wedge actuators, and span drive system. System equipment such as drives and Hydraulic Power Unit (HPU) were to be located on the swing span, near the pivot center. Since there is a single navigation channel to the northeast of the pivot pier, an aerial cable was specified over the adjacent crossing, since vertical clearance is not a concern there. Finally, in keeping with CSXT's ongoing program for automation of their movable bridge operations, the replacement bridge was specified to be outfitted with remote operation capabilities.

DESIGN CHALLENGES

As noted above, it was decided to attempt to make use of the existing substructure in support of the replacement superstructure. This presented challenges in assessment of the reliability of the existing timber piles, the surrounding soil, and the concrete substructure elements. Another challenge with the Bayou Sara site is the low clearance between span and water level (4.5 ft min. freeboard). Other challenges related to constructability were (1) site access; and (2) limited duration rail outage for span replacement.

Utilize Existing Foundations

Original boring logs from the 1928 contract plans were employed for initial foundation assessments (see Figure 3 for original foundation detail). These assessments concluded that the rest pier foundations were adequate for the replacement design as-is. However, the initial assessment for the pivot pier capacity was borderline, so a soil boring investigation was conducted, under a 24-hour United States Coast Guard (USCG) marine outage, and results indicated adequacy to support the replacement structure. In addition to the questions surrounding the timber piles and soil comprising the deep foundation, the pier concrete was surveyed for its viability under the effects of the new structure as well as the environment, for its anticipated life span. Since the pivot pier concrete near the top surface exhibited wear of both physical and chemical nature, and it was

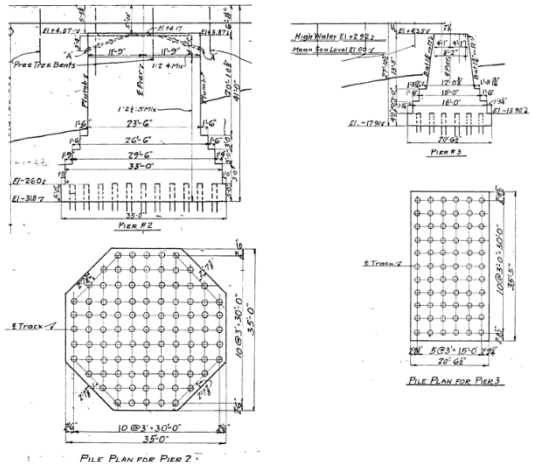

Figure 3 Existing Foundations

important to ensure the integrity of this critical machinery-mounted interface between the foundation and the replacement superstructure, the decision was made to remove the upper 3-ft deep portion of the pier cap, and replace this with a precast concrete cap element, with the rack, wedge seats, and pivot bearing preinstalled to accelerate the replacement. Ultimately, this precast concrete pier cap scheme devised during the design phase was superseded when it was requested in construction phase that the rail outage be reduced from 48 to 14 hours. The adaptation selected to achieve this acceleration is discussed in detail below.

Limited Freeboard & Site Access

Low clearance between the superstructure and the (brackish) water surface presents a challenge for durability of the structural steel and for the operating machinery and equipment. This was the driving force behind the use of hydraulics and associated limitation of open gearing. Likewise, the drive system and HPU were ultimately located more than 35 ft. above mean high water (MHW) level. Stainless steel enclosures (NEMA 4X rated), PVC-RGS conduits, and sub-sea connectors for proximity switches were specified for resiliency in the electrical system. Metallization and a two-coat epoxy paint system was selected as the structural steel's protective coating measure for low maintenance and maximized life-cycle.

There are also difficulties associated with the site of the Bayou Sara Bridge. The low-lying swampland extending for miles around the bridge site represents an obstruction against consideration for a roadway of any kind for vehicular access. Access to the bridge for local operation, maintenance, inspection, rehabilitation, construction – including material and equipment delivery – is thus limited to marine vessels, and rail-borne passage such as hy-rail vehicles (see Figure 4).

Figure 4 Site Limited Access

Limited Rail Outage for Span Swap-Out – Grillage

As mentioned above, the rail outage to be conceded by CSXT's freight rail operations was originally 48 hours, which is a challenging timeline for removal of an entire rotating freight-rail conveyance, and installation of a new one. Within the construction phase, Brasfield & Gorrie, General Contractors (B&G) developed a detailed plan to achieve the swap-out of bridges using the solutions detailed in the contract plans within this service outage duration. However, as the planned outage drew near, CSXT requested whether a reduction in the outage could be achieved, to avoid delaying their freight schedules. Options were considered, including temporary shoring to allow faster return to rail service. In the end, the collaborative efforts between the owner, contractor, and engineer concluded that the most cost-effective solution would be a structural steel support frame – or grillage – to be suspended from the new swing span with rack, wedges, and pivot bearing pre-mounted on it, allowing for a faster swap-out of the swing spans.

A schematic of the grillage from Steward Machine Company's (SMC) shop drawings is presented in Figure 5. The primary function of the grillage was to provide support for the new swing span under freight train loads, immediately after float-in. Sufficient rigidity for the direct support – and maintained relative alignment – of pivot bearing and wedge seats was therefore the first requirement. The outage for marine navigation was longer, allowing for time to cast the surrounding concrete in place after the float-in phase. However, the schedule did demand that the rack be aligned upon float-in, leading to the second function of the grillage: mounting/support of the rack. The 'T-beam' shape, comprised of welded plates, was selected for the ring beam and the central 'spine' of the grillage, to provide the rigidity needed without a bottom flange which would interfere with concrete placement. At main support locations below the wedge seats and the pivot bearing, lower base plates are incorporated for immediate engagement on shim stacks and grout. Shims were similarly used around the perimeter in support of the rack support beam.

As illustrated in Figure 5, double-channel bracing elements were incorporated in the grillage frame, transverse to the primary support 'spine' of the grillage, for maintaining the alignment of the frame in transport. These members were also used for engaging with the threaded bars suspended from the superstructure to hold the frame in place during transport. The four bracing beams used for this were removed after location of the span in place, and reinforcing steel cages were then installed. The two main bracing beams at center remained in place and were ultimately embedded in concrete. These were detailed with holes through the webs to promote flow of concrete, and studs to further integrate the steel grillage in the cast-in-place concrete pier cap.

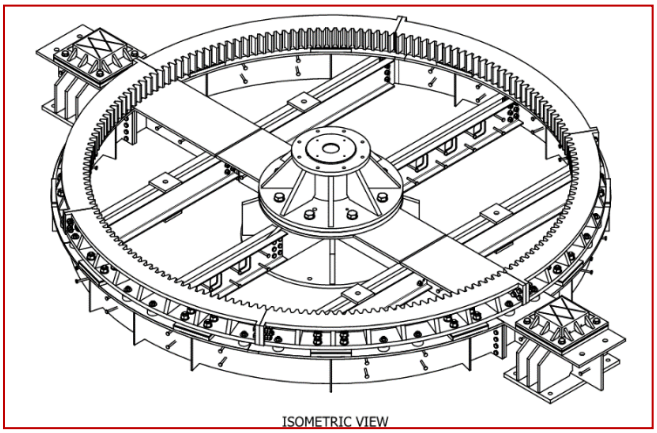

Figure 5 Structural steel grillage shop drawing rendering (Steward Machine)

CONSTRUCTION INITIATION

The Bayou Sara Swing Span was constructed approximately 5 miles south of the bridge site at a rock storage yard along the Mobile River in Mobile, AL. B&G's construction team mobilized to the site in August 2017 to start site preparations for structural steel erection beginning shortly thereafter. This project posed several construction challenges including utilizing existing foundations, revised float-in duration, working on and around active rail, remote site access, and seasonal increased train traffic. In June 2017, prior to mobilizing, CSXT requested that B&G & HDR begin reviewing options to reduce the outage duration by more than half of the original allotted time. As noted above, the grillage concept was ultimately selected in September of 2017, approximately two months prior to the target float-in date of Thanksgiving.

Grillage Procurement

When the grillage concept was first discussed, B&G immediately contacted SMC to discuss constructability and material availability. SMC was able to provide feedback on what shapes were readily available and what fabricated sections would be most efficient to fabricate. The general shape and sections were first approved so that material could be released. Machining and specific anchoring requirements were developed during fabrication through several coordination calls between CSXT, HDR, B&G, and SMC. This collaborative effort facilitated expedited shop drawing development and engineering review and was crucial to procuring the grillage in time for installation prior to the float-in.

Float-In Plan Development

A comprehensive Float-In Plan noting the pre-float-in, float-in, and post float-in activities was developed by B&G to provide visibility on the overall scheme to remove and replace the existing bridge. This plan was submitted to CSXT and HDR for feedback and discussion during weekly coordination calls with respect to potential risks and abatement measures. It also served as a catalyst for discussions clarifying responsibilities between CSXT and B&G leading up to and during the float-in. The Float-In Plan included narratives of key activities, site logistics and staging diagrams (See Figure 6), activity scripts, and construction engineering documents relative to various aspects of the work. The activity scripts were utilized as a form of micro-scheduling. Each key activity was broken down into several tasks. The script included the field crew who would be performing the work, materials and equipment necessary, and a target duration of the activity. After the reviews and approval by all involved, the finalized plan was presented to the B&G field and operations team, CSXT, and HDR prior to the float-in. The presentation provided another opportunity for the entire team to provide feedback or ask questions about the plan.

PRE-FLOAT-IN

When internal B&G planning sessions began, the initial focus centered around determining what work could be completed or partially completed prior to the float-in to reduce the original outage duration. The two principal areas of focus were:

1. Existing Foundation Prep Work
2. New Bridge Machinery Prep Work

Within each group, several activities were derived and incorporated into a detailed completion list and tracked daily with the B&G field team to manage the work and track pre float-in schedule.

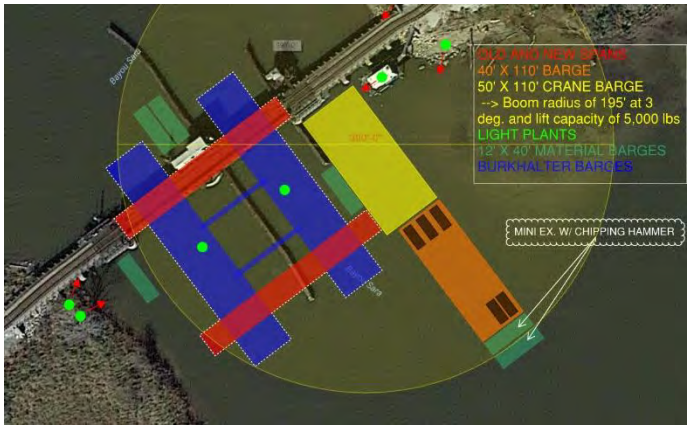

Figure 6 Site Logistics and Staging

Existing Foundation Prep Work

The existing center pier at Bayou Sara was the focal point in planning for the Float-In. A hybrid cofferdam was constructed around the center cap early in the project to provide a working platform 360 degrees about the pier. It utilized a two-stage installation, a synthetic membrane draping the sides, and a small 3" pump to keep water out of the work area as needed. As noted above, approximately 3ft of the existing pier needed to be removed and replaced with a new reinforced concrete cap. Having the ability to access the center pier at all times was crucial. Figure 7 shows the cofferdam setup.

The biggest unknown prior to the float-in was the condition of the center pier and its ability to be removed in one piece during the float-in. The original float-in scheme utilized a round-the-clock wire sawing operation during the first phase of the outage to separate the top portion of the pier. Thanks in no small part to the more generous navigation outage allowance of 3 weeks, the wire sawing scheme was modified so that it took place prior to the rail outage window. It was thus conducted under live train traffic, which significantly reduced the railroad outage window. The revised wire sawing scheme consisted of five (5) phases:

1. Core Pilot Holes to Run Wire Through Cap
2. Selective Demolition for Existing Span Jacking & Blocking Pockets
3. Wire Saw Outer Thirds of Cap
4. Jack and Block Bridge to Distribute Load to Rest Pier
5. Wire Saw Middle Third of Cap

Figure 7 Center Pier Cofferdam

While coring the pilot holes, the core samples were inspected. No steel reinforcing throughout the center pier cap was observed. The core samples were taken to a local testing lab to determine the compressive strength of the existing concrete cap. The results varied from 1500 psi to 2800 psi. The low compressive strengths and lack of reinforcing reconfirmed that the existing top of cap condition was poor and in need of replacement.

When the outer two thirds of the cap were wire sawed, two 100 ton jacks were used on either side of the blocking pockets to raise the bridge at each support location. Hard timber blocking and a 1" thick steel sole plate were used to support the bridge and lock the blocking in place. The jacking pockets were sealed and

secured to prevent shifting under vibrations from live train traffic. The existing bridge was supported for five (5) days prior to the rail outage and monitored daily. This temporary support condition was reviewed by a third-party engineer prior to jacking and blocking the bridge to verify it would not have adverse effects on the existing span. The train speed was also reduced to 10mph during this time as an added safeguard. Figure 8 shows the timber blocking installed in its final condition prior to the outage. Note the saw cut line and pilot holes in Figure 8.

At the rest piers, the new wedge seat anchor bolt holes were cored prior to float-in as the new bridge was four feet wider than the existing bridge. The rest pier concrete at each wedge seat location was also chipped down and smoothed. Steel shim pack bases were installed and epoxied in to provide a level surface for installing supplemental shims up to the bottom of wedge seat elevation. To accelerate horizontal bridge alignment during the float-in, bridge stops were also installed at the back corners and a threaded extension plate was used to align the horizontal positions prior to float-in. Four bridge position stops were installed, but three were utilized, leaving room to float the bridge in and position into one corner (Figure 9).

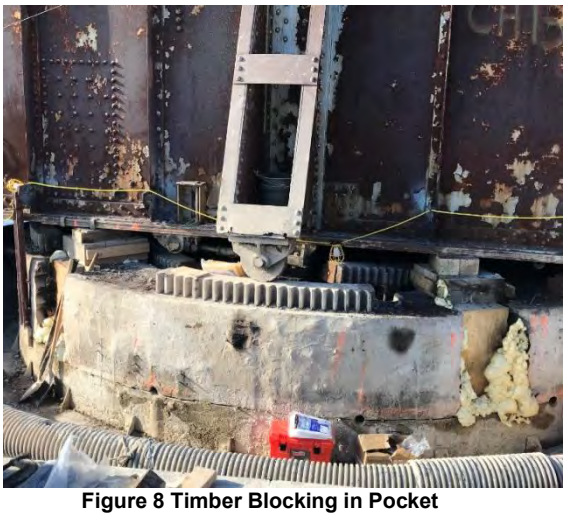

Figure 8 Timber Blocking in Pocket

Figure 9 Bridge Stops at one Corner

New Bridge Machinery Preparation Work

With incorporating the grillage concept, one major concern was machinery alignment and the ability to adjust after the bridge was set in place. B&G opted to perform an alignment check before float-in to verify rack flatness and the construction of the grillage frame. When the grillage arrived at the erection site, the bridge was positioned over the grillage using self-propelled modular transporters (SPMTs), which helped accelerate grillage installation. Threaded rods and a jacking frame on the trackside of the bridge (see Figure 10) was used to raise the frame into its initial position. A combination of porta-powers, come-alongs, and the jacking frame on the trackside was used to position the grillage and machinery rack in place. A third-party measurement company was used to check the rack flatness and horizontal alignment relative to the center of the bridge and pinion motors. Once the rack was in place, the jacking frame and threaded bars were locked into place, blocking was placed between the balance wheels and machinery rack, and several come-along and ratchet straps were used as cross bracing to limit the grillage movement during the span transport and float-in (see Figure 11).

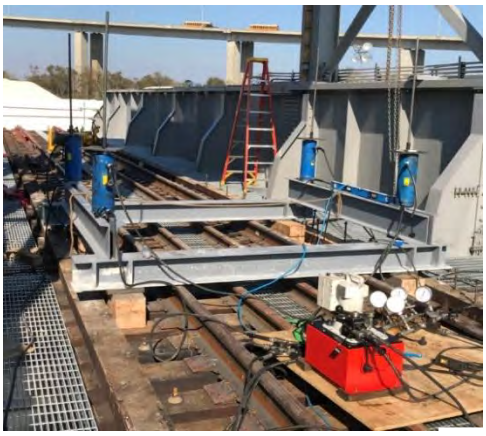

Figure 10 Grillage Jacking Frame

Figure 11 Grillage Frame and Machinery Aligned and Secured Prior to Float-In

Another key pre-float-in activity was the end wedge seat installation. These seats were over 800lbs and it was not feasible for a crane to set the seats during the float-in due to site logistic and time constraints. Installing the seats on the existing rest piers prior to the float-in was reviewed, but upon laying them out, the existing wedge seats conflicted with the new location by approximately 4 inches. It was then determined that the seats would need to be transported with the span during the float-in. The plan to achieve this was to secure the seats to their respective wedge locations using banding, come-alongs and a backup shackle and cable to secure the seat in the event it fell off prior to or during the float-in.

FLOAT-IN

The accelerated float-in scheme developed into the following general sequence of activities:

1.	Demo existing span utilities and machinery	Hour 0-2
2.	Secure existing center pier cap	Hour 0-2
3.	Raise up and float out existing span	Hour 2-3
4.	Center pier prep prior to float-in	Hour 3-6
5.	North and south pier prep work prior to float-in	Hour 3-6
6.	Float-In and new span alignment	Hour 6-8
7.	Lowering span	Hour 8-10
8.	Final alignment and secure span	Hour 10-12
9.	Grillage support frame removal	Hour 12-14

Breaking down the activities by the hour allowed the team to track progress consistently throughout the outage. The critical path of the outage ran through the center pier.

Secure Existing Center Pier Cap

Securing the top portion of the pier cap to the existing bridge was critical to shortening the outage duration. If the cap could not be removed with the existing bridge, a track-mounted chipping hammer would have been used to break up the cap and remove it from the center pier. This would have been time consuming and labor intensive. Several options were conceptualized including the use of cables as a basket, strong back beams with anchor plates tied to the cap (see Figure 12), and a threaded rod hanger system with epoxied dowels in the cap (see Figure 13). Consulting Engineer Heath & Lineback (H&L) provided concepts of each system with B&G's assistance. The basket option was ruled out quickly when B&G consulted with a local rigging company on the configuration. The rigging company advised that the sharp bends in the rigging, even with softeners, could be points of fatigue and cause the basket system to fail. Ultimately, the threaded rod system was used. This was primarily because most of the system could be installed prior to the float-in, with only a few small members to be installed when the outage commenced. The strong back

beam option was procured and on hand to be used as a backup option in the event the threaded rod system failed.

Center Pier Preparation Prior to Float-In

When the float-in began, the center pier crew installed the top support tube steel for the outer rods, coupled the threaded rods together, and welded the couplers in place to lock them in. Two large ratchet straps were also used to provide lateral inward pressure on the cap to help resist major fatigue cracking. As the existing span was raised, the existing cap rose with it in one piece as planned (see Figure 14).

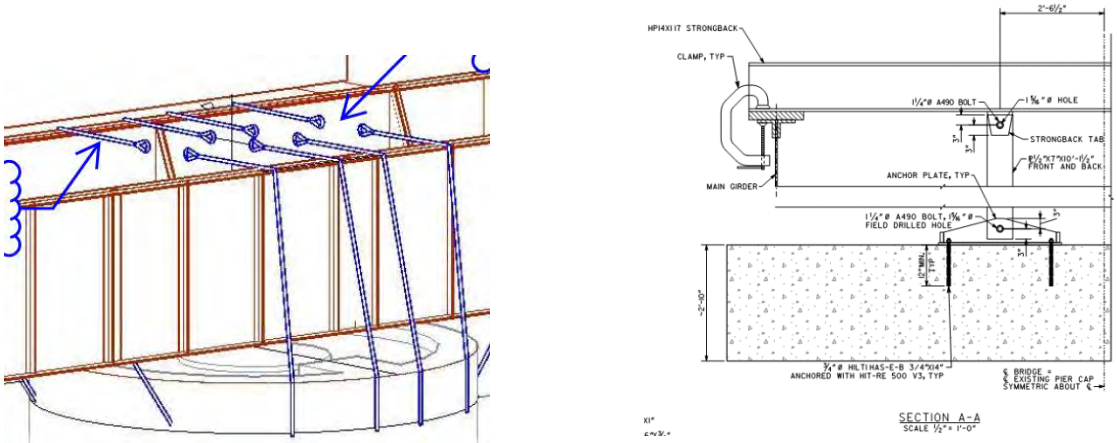

Figure 12 Conceptual Basket Hanger System (left) and Strong Back Beam and Anchor Plate System (right) – Heath & Lineback Engineers

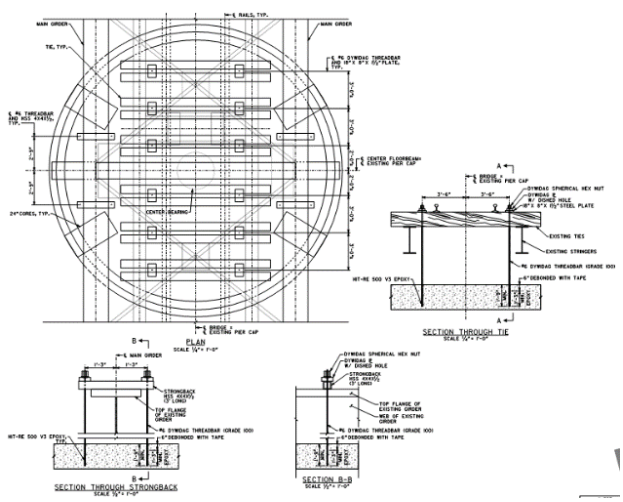

Figure 13 Threaded Rod Hanger System – Heath & Lineback Engineers

Figure 14 Existing Center Pier Cap Removal

The concept of the grillage frame allowed the dead and live loads to be passed directly through the frame to the center pier. To achieve this, the grillage needed to be supported by steel shims to transfer the load. When the existing bridge and cap were removed, the B&G team immediately began to clean the center pier and prep for shim installation, as shown in Figure 15. A robotic survey instrument was utilized to quickly layout the grillage frame, anchor bolt, and rebar dowel locations on the pier, relative to the center of track. A level instrument was used to quickly verify elevations as shims were installed. Anchor bolt and rebar dowel holes were drilled during this time as overhead clearance would be limited after the span was set. Multiple hammer drills were used so that coring for dowels and anchors could be done simultaneously in

each quadrant to minimize time spent on prep work. Shims were placed in the center pivot and center wedge seat footprints for the grillage to be set directly on them. Fast setting epoxy was used to secure the shims so that shifting would not occur while setting the bridge.

Lowering Span

When all anchor and rebar holes were drilled and shim elevations confirmed, the bridge was then floated over the piers – see Figure 16 and 17 – and water was pumped into the barges to lower the span. The pumps were controlled individually, and the span was lowered slowly. When the bridge was roughly aligned horizontally, come-alongs connecting the barge and rest pier on each rest pier side were used to move the span horizontally in lieu of using push boats as shown in Figure 18. Multiple survey points were taken using the robotic survey equipment to verify placement periodically as the span was lowered. When the span was within ¼" of the final elevation, the horizontal alignment was checked at four locations and then lowered into place.

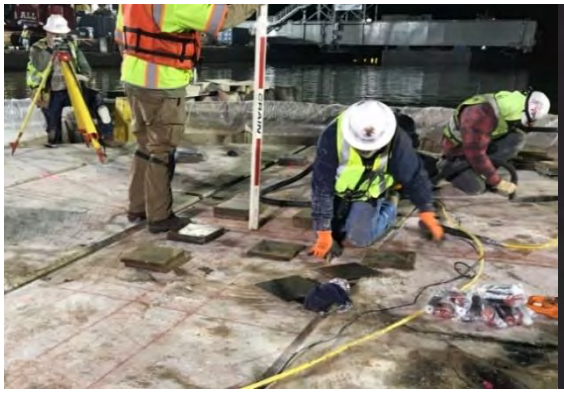

Figure 15 Center Pier Prep Work Prior to Float-In

Figure 16 Bridge Float-In Over Existing Piers

Figure 17 Grillage Alignment Over Center

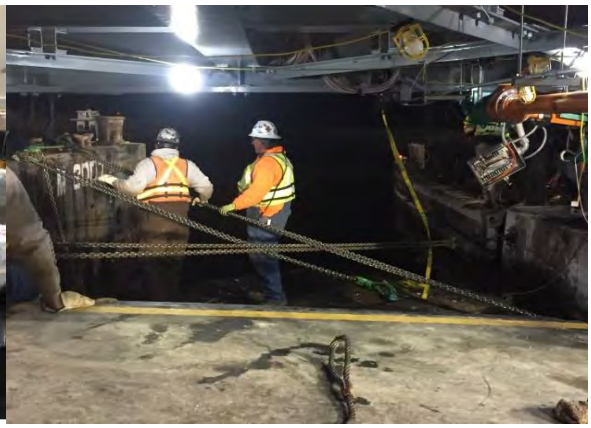

Figure 18 Come-Along Setup Used to Position the Bridge

Final Alignment and Securing Span

When the bridge was resting on shims, the third-party measurement company was used again to verify machinery rack flatness and horizontal alignment relative to the bridge center and pinion motors. The rack measurements were nearly identical to the pre-float-in measurements taken and only minor adjustments needed to be made. Small porta-powers were used to make minor adjustments and shims were placed directly below the grillage to lock the frame and machinery in place. Once the frame was properly shimmed, grout pads were poured beneath the center pivot and center wedges to secure the shims and grillage frame anchors. Heaters were then setup at the center, north, and south piers to accelerate the setup and cure time of the grout.

POST-FLOAT-IN

After completing the outage, formwork and reinforcing installation began. Preparations were also made for loading concrete trucks at B&G's offsite erection yard. The pour was approximately 38 CY and the travel time from the plant to the bridge site was approximately one hour. Two barges were used, each holding two trucks and a line pump as shown in Figure 19. The concrete placement required another short rail outage to allow the concrete to setup and cure. CSXT also requested that the concrete mix be high early strength to allow train traffic to resume approximately 6-8 hours after concrete placement was completed. Prior to the pour, B&G had the concrete supplier develop a temperature curve correlating heat of hydration to compressive strength. The curves were then uploaded to a job specific database that could be accessed via a mobile phone app. Temperature sensors were installed within the pour to take real-time temperature readings. Within 3 hours of completing the concrete placement, the theoretical strength approached 1500 psi. The 1-day cylinders for the first and second batches broke at 3,700 psi and 2,450 psi respectively. The temperature sensors indicated similar readings between 2,200 psi and 3,200 psi. It should be noted, that the first batch of concrete used had a significant amount of accelerant which caused the mix to setup faster than expected and posed workability issues. The accelerant dosage in the second batch was reduced and workability was improved.

CONCLUSION

The successful Bayou Sara Bridge Swing Span replacement is depicted in Figure 20, with freight passing over the newly installed structure. At approximately two months prior to the target float-in date of Thanksgiving, modified pivot support scheme for reduction of the outage duration from 48 to 14 hours, posed a significant challenge. The design approach allowed for seamless construction thanks to the prefabricated grillage with pre-mounted mechanical components as well as a durable life cycle of the bridge using metalized structural steel. The grillage concept allowed for an efficient construction sequence utilizing existing foundations and revised pre-float-in preparations to accommodate a shorter rail outage. The structural steel grillage also played a crucial role in reducing the outage time tremendously as the pivot machinery was directly suspended from the new swing span during the float-in. Collaboration between the designer, owner, and contractor remains the key to a successful accelerated bridge construction project.

Figure 19 Barge and Concrete Truck Setup

Figure 20 Bayou Sara Swing Bridge in Service Shortly After Float-In

RAPID RECONSTRUCTION OF BNSF BR. 482.1 WEST APPROACH

Temple Overman, P.E., HNTB Corporation, (816) 527-2726, toverman@hntb.com
Cory Duerr, P.E., Kraemer North America, (715) 834-3514, cduerr@kraemerna.com

INTRODUCTION

Reconstruction of the west approach to BNSF Br. 482.1 near Memphis, Tennessee was completed in October 2017. The Memphis bridge was the first to cross the lower Mississippi River in 1892 and it remains an important crossing for the BNSF Railway today. Accelerated Bridge Construction (ABC) techniques have been used by the rail industry for decades, although the term ABC was not used the entire time. This paper will discuss various design aspects of the two-year project that were instrumental to the successful implementation of chosen ABC and erection methods and lessons learned from replacing 2,712' of bridge superstructure in four track closure changeouts.

DESIGN FOR ACCELERATED CONSTRUCTION

Planning for ABC begins in the design phase which requires many discussions between the owner and consultant to determine how long the track can be out of service. Primary factors include how much traffic the line receives and if there are any nearby lines to reroute the traffic.

Drilled Shaft-Micropile Hybrid Foundation

To rapidly replace the west approach and align with the existing river truss, new foundations had to be constructed on the existing alignment and under traffic. A hybrid drilled shaft-micropile foundation was used to reduce the potential movement of the 125-year-old existing timber pile foundations during construction. Drilled shafts ranged from 8' to 10' in diameter and were 55- to 74' in length. Micropiles extended below the shafts for an additional 55' to 80'. Movement of the existing tower bents was closely monitored using survey targets, and no adverse movement was detected during construction.

Designing for ABC

The existing bridge superstructure consisted of open deck plate girder spans and a 339' deck truss. The existing foundations were made up of varying height steel tower bents and masonry piers. The new superstructure span lengths were determined by spacing the foundation elements between the existing tower bents. With the reconstruction of the approach split into four changeouts, designers had to detail transitions between the phases. This required converting existing spans into jump spans and detailing transitions between the existing open deck bridge and the new ballasted deck bridge. New spans consisted of steel deck plate girders ranging in length from 72'-6" to 191'. Four longer spans, ranging in length from 176'-6" to 191' were needed to cross over a newly converted pedestrian path, a county road, and to replace the deck truss. The shorter spans had steel deck pans while the longer spans had cast-in-place concrete decks.

Two steel spans,178'-1" and a 191', were used to replace the 339' deck truss. Pier 27 had to be carefully detailed as it included a 7' diameter column, an 8' wide x 7' deep pier cap, and falsework to fit through the deck truss. After analyzing the existing span, some lattice members were removed to aid with the construction of the pier. The Pier 27 cap was detailed with an 8.5" step to accommodate the difference in elevations between the two deck plate girder spans. The pier cap was prepped with channels that were later used for the bi-lateral span roll-ins.

MASS CONCRETE

All columns and pier caps had dimensions in three directions that were greater than 6’ and were thus considered mass concrete, as described in the project specifications. The first mass concrete pour was the Pier 3 footing. The pour occurred on June 8, 2016 when the max ambient air temperature was approximately 90-degrees Fahrenheit. Cooling tubes, chilled aggregate, and thermal blankets were utilized to ensure the internal concrete temperature and the temperature differential were within the project specifications. In the summer time when ambient air temperatures are high, the controlling factor for thermal control tended to be maximum internal concrete temperature. In contrast, the Pier 27 footing was poured on December 21, 2016 when maximum temperatures ranged between 40- and 50-degrees Fahrenheit. During winter time, the maximum concrete temperature differential controlled. No cooling tubes or chilled aggregate were used during the Pier 27 footing pour, only multiple layers of thermal blankets. The Pier 27 footing was under thermal control for three or four times that of the Pier 3 footing was under thermal control. If a concrete pour is not on the critical path and temperatures can be maintained within the project specifications, less rigorous thermal control measures may be used. However, the decision to use cooling tubes on this project allowed for a much faster progression through the concrete phases of the project.

PHASED CHANGEOUTS

Four track closure windows ranging in duration from 36 to 52 hours were used to replace the approach superstructure. All new steel spans, except for the four long steel spans were erected with one crane during the changeouts. Five pier caps were extended from the contract plans to aid with erecting the long steel spans prior to the changeouts. Steel channels were installed on the pier caps that were used to roll the deck plate girder spans into place. This allowed time prior to the changeout to complete diaphragm bolting, pour and cure the cast-in-place deck, and waterproof the deck with little to no impact to rail traffic. If these spans were assembled on the ground, a two-crane pick would have been required to erect the spans. This would have greatly increased the risk of missing the time constraints during the changeout window.

Phase I Changeout

The Phase I changeout took place in November 2016 and replaced 748’ of bridge in 40 hours. Rollers were utilized to transversely roll the two 176’-6’” steel spans 17’-6” during the changeout. The project team learned a few valuable lessons while rolling the two long spans in this phase that would be transferred to the final two spans of the project which allowed those spans to roll in more smoothly.

Phase II and III Changeouts

The Phase II and III changeouts occurred on February and April 2017, respectively, and each replaced 708’ of bridge in under 36 hours. All new spans were 88’-2” in length and were preassembled on the ground prior to the changeouts. For the first three changeouts, the existing bridge was made into a temporary jump span to transition the new ballast deck bridge to the existing open tie bridge.

Phase IV Changeout

The final changeout occurred in August 2017 and replaced the remaining 548’ of approach. Prep work required prior to the changeout included constructing a pier through a 339’ deck truss, strengthening the truss in preparation to be lowered, erecting extensive falsework towers to support the strand jacks, and erecting 178’ and 191’ spans onto extended pier caps. During the changeout, the ends and middle sections of the 339’ deck truss were removed prior to lowering the span with strand jacks. Some sections of the deck truss had thick multiple layers of steel which would reweld back together. This greatly lengthened the time for removal. As soon as the deck truss was lowered below the new girder spans, the 178’ span was rolled 23’-8” transversely and 3’-8” longitudinally to align with the existing river pier, and then the 191’ span was rolled transversely by 23’-5” into alignment.

Figure 1: Preparing to roll a 176’-6” steel span into final position during the Phase 1 changeout

Figure 2: After lowering the 339’ deck truss using strand jacks. Crews prepare to roll two steel spans during the Phase IV changeout.

SUMMARY

In conclusion, ABC techniques that were detailed during the design included the hybrid drilled shaft micropile foundation, converting existing spans into a jump span to transition between the phased changeouts, and detailing Pier 27 to fit through the existing deck truss. These details were paired with the contractor’s ABC techniques which included extending five pier caps to aid with erection and assembly of the longer spans, using rollers to move four spans into place, and using strand jacks to lower the deck truss. These techniques were used together to successfully changeout the west approach to BNSF Br. 482.1 with minimal impact to traffic.

BNSF RAILWAY BRIDGE 380.12 OVER I-235 – PLANNING & CONSTRUCTION CHALLENGES IN OKLAHOMA CITY, OKLAHOMA

James P. Hyland, PE, TranSystems, (816)329-8735, jphyland@transystems.com
Sue Tryon, PE, Benham Design, LLC, (918)599-4242, sue.tryon@benham.com
Jeff Estes, PLS, LE, BNSF Railway, (817)352-3562, jeffrey.estes@bnsf.com

ABSTRACT

The Oklahoma Department of Transportation (ODOT) and BNSF Railway (BNSF) partnered to replace a BNSF bridge over the busy I-235 in Oklahoma City, OK. The project was part of ODOT's largest construction package in history, at $81 million, of which the truss bridge comprised $17.5 million.

For construction of the additional lanes of traffic of I-235 to proceed, the existing two-80' span, skewed thru-plate girder BNSF bridge had to be removed and replaced with two 275' thru-truss spans. To minimize disruption to the 49 daily trains, the new bridge was constructed on an offset alignment. To minimize disruption to I-235 vehicular traffic (115,000 daily vehicles), the new spans were assembled offsite and transported on Self-Propelled Modular Transports (SPMT's) down the highway during a planned weekend outage. Finally, a short closure of the BNSF track was utilized to shift the existing track onto the new track alignment and bridge.

INTRODUCTION

The Oklahoma Department of Transportation (ODOT) and BNSF Railway (BNSF) partnered to replace a BNSF bridge over the busy Interstate 235. The project was bid by ODOT as part of its largest construction package in history, at a contract bid price of $81 million, of which the truss bridge comprised $17.5 million. The contract time for the interchange project was 850 calendar days, which was reduced to 700 days using A+B bidding. Careful planning and modifying of construction sequences by the contractor further reduced the schedule to 621 days.

For the expansion of I-235 to proceed, the existing two-span BNSF thru-plate girder bridge had to be replaced. Given the skewed alignment, the additional lanes of traffic and full shoulders, the new span lengths increased from 80 feet to 275 feet, requiring the use of thru-trusses. To minimize disruption to the BNSF train traffic, the new bridge was constructed on an offset alignment. To minimize disruption to I-235 vehicular traffic, the new spans would be assembled offsite and transported down the highway during a planned weekend outage. Finally, a short closure of the BNSF track would be utilized to shift the existing track onto the new track alignment and bridge.

To minimize the disruption to both the interstate and BNSF rail traffic, Accelerated Bridge Construction (ABC) techniques were required. This minimized disruption to approximately 49 trains per day, and the 115,000 vehicles per day using the interstate. The contract documents were carefully crafted to ensure the contractors were fully aware the highway traffic would not be allowed to be reduced from four lanes to two lanes. The trusses could be launched or moved into place but could not be stick-built in the final location over highway traffic. They were also made aware the BNSF traffic could not be disrupted. See Figure 1 for aerial of project site during construction.

During the design phase, a location was identified as a laydown yard for assembly of the truss spans. The location of this yard required coordination with the construction of the replacement NW 50th Street Bridge since it is located between the laydown yard and new bridge. Additional coordination with ODOT was required to determine the acceptable closure duration for the highway, which was set for three days but was accomplished in just two days. With the level of complication for both the design and construction of

the truss spans over I-235, all project stakeholders including ODOT, BNSF, contractors and designers held specific meetings discussing the staging and construction steps required for the BNSF bridge replacement.

Figure 1 – Aerial of bridge site, looking northeast. Note both trusses assembled on west side of highway. Also note extensive construction work as the Northbound and Southbound lanes of I-235 pass under the existing BNSF Bridge.

The last truss bridge constructed by ODOT in Oklahoma was erected in the 1960's. The specialized skills necessary for the safe erection of a truss bridge of this magnitude were limited locally. Therefore, the contract documents required pre-qualification of the erection contractor.

The winning contractor elected to erect the trusses on the ODOT right-of-way and move them into place using Self-Propelled Modular Transports (SPMT). This creative method reduced the highway closure time for installing the trusses from months to a single three-day weekend. The use of SPMT's resulted in no impact to rail traffic during the erection and installation of the trusses. In addition to the time savings, the use of ABC construction using SPMT's greatly improved safety.

See Figure 2 for aerial of completed I-235 under BNSF Bridge.

COORDINATION BETWEEN BNSF, ODOT AND DESIGNERS

During Design

Coordination between stakeholders is critical to any project during construction, but the most successful projects include coordination during the design. This project included a number of coordination meetings during design.

During the preliminary phases (concept design) of the project, discussion of the needs of each stakeholder were discussed. Plans and site pictures were sent to BNSF and ODOT for review. Comments on those plans were received and reviewed. A meeting was then scheduled to discuss the comments in person between BNSF, ODOT and designers. The meeting allowed open discussion of all comments and design

requirements. The final response to the review comments were then prepared along with updated plans and sent to all stakeholders.

Figure 2 – Completed lanes under new bridge.

After the design proceeded to 30% design, another submittal was completed and sent to all parties, including a type selection report, design plans, and shoofly design. Comments on the submittal were received and reviewed, followed by a review meeting to discuss the comments in person between BNSF, ODOT and designers. Once again, the meeting allowed open discussion of all comments and design requirements. The final response to the review comments were then prepared along with updated plans and sent to all stakeholders.

The design then proceeded to 60% and another submittal was completed and sent to all parties, including design plans, calculations, geotechnical report, project specifications, drainage report, shoofly design and construction phasing. The same review, comment, meeting, and response process was repeated.

Final design was then completed, and a final submittal sent to all parties. Following the same process, the design was ultimately accepted by all parties, the railroad agreement signed, and the project proceeded to letting in April 2016.

Between each of the submittals, if items that affected the design or construction arose, any of the stakeholders would initiate a phone meeting to discuss, rather than waiting for the next submittal.

To ensure the safety of workers and the public, ODOT and the designers implemented a prequalification process to review the credentials and experience of the erection subcontractor. Plan notes were carefully crafted to ensure that the erection team possessed the experience necessary to erect and install the truss bridges in a safe manner while minimizing the risk of delays and disputes. The prequalification process was reviewed with the general contractors at an early mandatory pre-bid meeting. The general contractors submitted their erector's qualifications, including key personnel and previous experience with similarly

complex projects. A team comprised of ODOT senior staff and the designer reviewed the contractor submittals and worked with each contractor individually to approve the erection team.

To ensure that contractors understood the hierarchy of BNSF specifications and material requirements within the structure of a traditional highway project, plan notes were developed to clarify the inter-coordination of AREMA and BNSF Construction Specifications with the ODOT Construction Specifications and pay items. Additionally, key provisions of the BNSF Construction Specifications were repeated in the general notes to ensure that bidders properly understood what would be required of their workmanship. Erection plan submittal requirements followed the National Steel Bridge Alliance guidelines, to ensure the erection plan would be detailed and encompass specific requirements.

During Construction

At this point the project was let for construction by ODOT and the contractor selected. With a contractor on board, a few other stakeholders were added to the coordination including the contractor, fabricator, detailer, erection contractor, BNSF on-site construction manager and ODOT on-site construction manager. With all the new stakeholders, more frequent coordination was required, resulting in weekly project meetings.

The weekly project meetings included the following topics:

- Site safety
- Last week's progress
- Three-week look ahead
- Track protection needs
- RFI's
- Construction submittals
- QAQC
- Open topics

While the weekly project meetings are good for the day to day activities, several months before the roadway window additional coordination meetings were scheduled to specifically discuss the details and preparation for the roadway window. Similarly, additional coordination meetings were conducted before the track window to connect the track to specifically discuss the details and preparation.

In addition to these meetings, the coordination included several submissions by the contractor including the following:

- Construction phasing plan
- Temporary shoring plan
- Falsework plan
- Demolition plan
- Erection plan
- Erosion control plan
- Construction material certs
- Concrete mix design
- Structural steel shop drawings
- Concrete testing results
- Drilled shaft reports

Each of the submittals above were reviewed by the designers, ODOT and BNSF representatives to ensure each parties' concerns were addressed.

Finally, during the roadway window and track window, additional on-site construction inspectors from each stakeholder were used to ensure timely review of construction complications.

DESIGN

Site Constraints

The bridge site consists of several constraints that drove the replacement bridge design. First, the existing BNSF Railway Bridge crossed over I-235 at a significant skew with the existing piers limiting any additional traffic lanes. With ODOT needing to add lanes of traffic, a new railroad bridge was the solution. In addition, the 50th Street Bridge over I-235 also crossed at a skew, and existing piers limited the number of traffic lanes. So both of these bridges created a bottleneck for the new required traffic lanes.

To complicate the site, Deep Fork Creek also passed under I-235 and BNSF in this same area and would require partial relocation to accommodate the additional traffic lanes and new entrance ramp configuration. Finally, both the 50th Street Bridge and BNSF Bridge already had a shallow structure depth and substandard vertical clearance which would require modifying the profile grade of either the roadway, railroad or both.

With an existing railroad bridge over I-44 just north of this bridge, adjusting the railroad track profile was limited, so the I-235 roadway profile had to be lowered and the 50th Street roadway profile had to be raised. Finally, the existing roadway under the railroad bridge was considered a sump and limited the amount that the roadway could be lowered without requiring a pumping system. This condition limited the structure depth that could be utilized for the new railroad bridge.

With the adjusted roadway profiles, the design proceeded to determine the length of the new railroad bridge spans. With the severe skew still remaining over the new lanes of traffic, two long spans were required. ODOT was planning for 6 thru lanes of traffic and one auxiliary lane and BNSF prefers to not have a skewed substructure. To satisfy all the site constraints, a two-span bridge with each spanning 275' was determined. To support the railroad at that span length, the only viable superstructure was a thru truss. Additionally, tangent pile retaining walls were necessary at both abutments with these span lengths to stay within ODOT ROW and avoid impacting the BNSF embankment, local businesses and residents.

An additional site constraint was whether the new railroad bridge would be placed as an in-line replacement or offset alignment. While in-line replacements have been completed by BNSF, they are only utilized if absolutely necessary. Despite the other site constraints, the railroad track could be shifted to the east of the existing bridge to allow for an offset alignment without impacting other requirements. With an offset alignment, the new bridge could be built without disrupting the existing bridge or railroad traffic. The offset alignment actually restores the straighter pre-1960 BNSF alignment.

With the superstructure type determined, the final design of the railroad bridge proceeded. During design, discussion with ODOT identified several requirements. First, two lanes of traffic in each direction had to be maintained during construction. Second, the truss could not be stick built over highway traffic for safety of the traveling public. Finally, any highway traffic shutdown had to be kept to a minimum and occur over a weekend. With these requirements, it had to be determined how and where the spans would be assembled.

In reviewing the site, a large laydown yard was identified just west of the Eastbound I-44 ramp to Southbound I-235. The area was flat enough to allow for assembly of both trusses, multiple cranes and material storage. With the laydown yard being right off the highway ramp, material delivery was also easy. In addition, the laydown yard was located about ¼ mile north of the bridge. While there were many positives to the laydown yard location, there were a few items that had to be investigated and coordinated. First, the 50th Street Bridge was in the way, so the 50th Street Bridge replacement had to be staged to occur after the railroad bridge was completed. Second, overhead electric transmission lines crossed I-235 north of

50th Street, but were determined to be high enough for the assembled truss to pass under on the way to the railroad bridge site. See Figure 3 for aerial showing laydown yard proximity to bridge site.

Figure 3 – Aerial looking south towards bridge. Laydown yard is located on lower right.

Now that a laydown yard had been located, the next challenge was the moving of the assembled truss spans. The area between the laydown yard and the railroad bridge site is paved and therefore can support the heavy loads of the assembled truss spans. While they can handle the load, moving the spans would require I-235 to be closed to traffic and would also require temporary pavement to level parts of the pathway. To quickly move long truss spans, Self-Propelled Modular Transports (SPMT's) have become the preferred method of transport and have been used on numerous projects.

CONSTRUCTION

Truss Moving Equipment

After assembly of the truss spans on temporary supports in the laydown yard, the spans had to be moved into their final location over I-235. The trusses were lifted from the temporary supports to allow the SPMT's and cribbing to be maneuvered under the spans and were then lowered onto the SPMT's. A temporary lifting tower at each end of the truss was attached to the bearing posts. Once the trusses were on the SPMT's, then the journey would begin down the ramp and onto the highway.

SPMT's typically have a lifting range of 18", so cribbing was arranged on the SPMT's to raise the structure to the height necessary to set the trusses on the substructure. The SPMT's supported the truss from the

L4 and L6 joints of the truss. The erector's analysis required temporary supports to be added to the truss. The SPMT's consist of a series of modules that are linked together to move as one unit controlled by a single operator. The wheels for each module have 360-degree steering. In addition, the deck height can be hydraulically adjusted vertically to help keep the load within the angle limits. See Figure 4 for view of SPMT's.

Figure 4 – View of SMPT's maneuvering the north truss span into final location.

Figure 5 – View of truss on SPMT's headed down I-235 Southbound

The use of SPMT's are a common technique when Accelerated Bridge Construction (ABC) is necessary to limit construction duration and impacts. The use of the SPMT's in this application allowed full assembly of the trusses off site and transported into their final location during a short highway closure. While this bridge only utilized the SPMT's, there are numerous elements of ABC that are becoming employed more frequently for bridge construction.

Use of the SPMT's removed any need for cranes to be utilized during the placement of the truss spans, improving safety. It also removed the need for any temporary falsework around the existing highway since any temporary falsework was contained within the laydown yard. See Figure 5 for view of truss on SPMT's headed down the highway.

Highway Closure

For installation of the truss spans utilizing the SPMT's, closure of I-235 was required. The closure extended from I-44 on the north to NW 36th Street on the south. All traffic on I-235 was detoured around the construction site. Southbound traffic on I-235 was detoured onto I-44 and I-40 and Northbound traffic on I-235 was detoured onto I-35 and I-40 with only local traffic proceeding up to NW 36th Street. As part of the closure, ODOT kept the traveling public well-informed utilizing a traditional and social media blitz that started a month before the closure and increased through the entire weekend closure. ODOT also provided a viewing area for the public, well separated from construction and provided a great view of all the construction.

Originally, the closure was planned as two separate weekend closures (one for each truss span), but the contractor requested the closures to be combined into one long weekend closure, which was granted. With one long closure, the 83-hour closure would start at 7 pm on Friday night and re-open to traffic at 6 am on Tuesday. The closure began on January 26, 2018 at 7 pm and was completed within 59 hours, or one day early. See Figure 6 for the actual timeline.

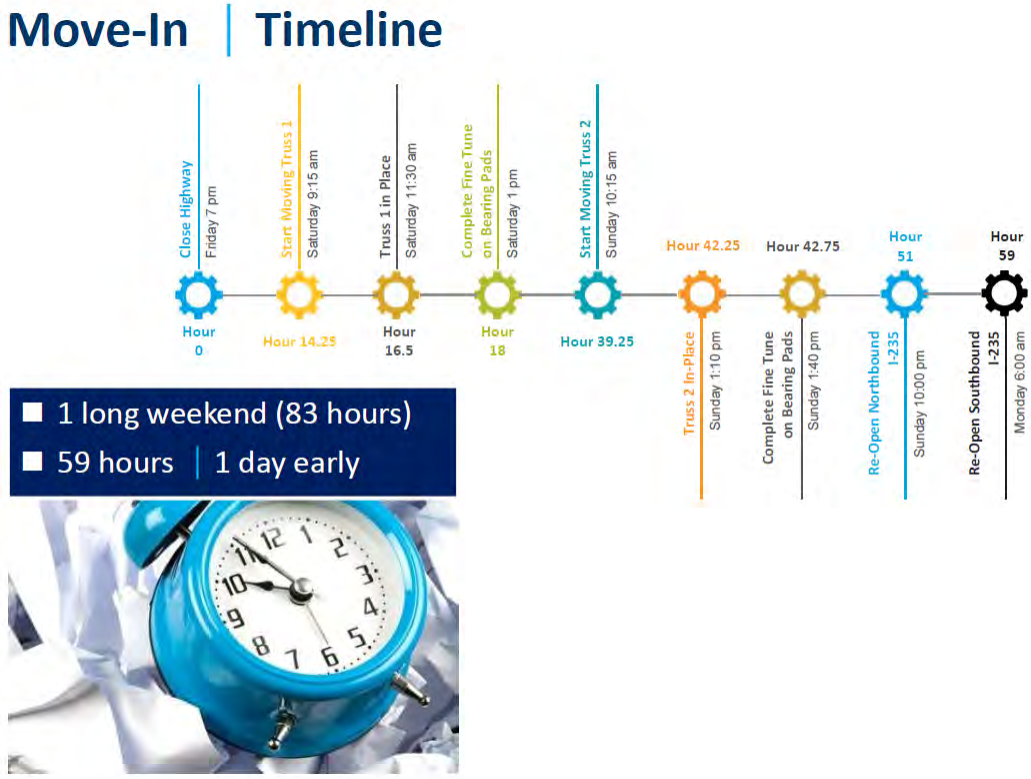

Figure 6 – Move-In Timeline.

Days prior to the highway closure, the temporary struts were installed on both truss spans and the south truss was lifted utilizing the temporary lift towers and set onto the SPMT's and secured for transport to bridge site.

The sequence of construction during the highway closure progressed as follows:

- Traffic control was placed and traffic detoured starting at 7 pm Friday. Once in place, all temporary barriers were removed between the Northbound and Southbound lanes of I-235.
- For the SPMT's, a level surface was necessary under each of the truss spans so temporary earth fill was placed and compacted on top of the existing pavement in select locations.
- Saturday morning, move South truss span (Truss 1) from laydown yard to bridge site, proceeding on the I-44 ramp to Southbound I-235 and then onto Northbound I-235.
- Maneuver Truss 1 onto South Abutment and Pier. Adjust onto bearing assemblies prior to final setting.
- Remove temporary earth fill on Northbound lanes of I-235 and reinstall barriers.
- Sunday morning, move North truss span (Truss 2) from laydown yard to bridge site proceeding on the I-44 ramp to Southbound I-235.
- Maneuver Truss 2 onto North Abutment and Pier. Adjust onto bearing assemblies prior to final setting.
- Complete temporary pavement markings on Northbound I-235 and reopen to traffic Sunday evening.
- Remove temporary earth fill on Southbound lanes of I-235 and reinstall remaining barriers.
- Complete temporary pavement markings on Southbound I-235 and reopen to traffic early Monday morning.

The sequence of construction above was completed well in advance of the 83 hours due to months of meticulous planning and coordination between all parties and great execution by the contractor. The installation of both truss spans went smoothly and allowed both the Southbound and Northbound lanes of I-235 to be opened to traffic before the Monday morning rush hour, returning traffic back to normal without disrupting one day of weekday commuter traffic.

Track Connection

After both truss spans were installed, the contractor proceeded to complete the bridge construction. This included casting concrete for both abutment backwalls, backfilling and final grading around the abutments, and waterproofing the bridge deck. After this was completed, BNSF forces constructed track panels across the new bridge up to the tie-in points on either end.

Then on February 26, 2018 at 11 am, BNSF forces began a track window to cut and shift the existing track at both tie-in points to the new track across the bridge. The crews began by cutting the track at each tie-in point and began shifting the existing track east to tie to the new track. Once this was completed at both ends, crews brought a ballast train to dump ballast across the bridge and new track. The new track was tamped and surfaced multiple times to obtain the design track profile. The track was returned to service around 8 pm that same day. See Figure 7 for a train crossing the bridge few months later.

Figure 7 – View of train on new bridge a few months after completion.

SUMMARY

While this project was part of ODOT's largest construction package in history, coordination of all stakeholders led to successful completion of the project. Along the way, the roadway window was completed 24 hours ahead of schedule. Also, innovative thinking by the contractor reduced the total contract schedule, which allowed other phases of the interchange project to begin 8 months earlier than the original contract timeline. Finally, with the offset track alignment, off-site laydown area for erection, and the use of SPMT's, the bridge was completed with minimal disruption to the railroad traffic and highway traffic.

CONSTRUCTION SEQUENCING FOR SEPARATING HIGHWAY-RAIL GRADE CROSSINGS WITH MINIMAL INTERRUPTION TO THE RAILROAD

Art Ivantchouk, Ph.D., P.Eng., President & Chief Engineer, ART Engineering Inc., 844-827-8364, art@artengineering.ca

Eric Carson, P.Eng., Senior Engineer, ART Engineering Inc., 844-827-8364, eric@artengineering.ca

ABSTRACT

In recent years, government bodies and railway companies have been working towards eliminating dangerous highway-rail grade crossings through a variety of means, including grade separation. Due to operational requirements of the railroads, ABC construction techniques are sometimes implemented in these grade separation construction projects to limit interruption to the railway. In response to this trend, Grade Separation Systems (GSS) was developed. GSS is a construction technology allowing for the construction of an at-grade rail bridge and underpassing roadway without causing significant interruption to the railway schedule. Through the use of ABC techniques, GSS is able to eliminate the need for rail relocation (shoofly tracks) and significantly reduce required temporary works. When compared to conventional methods, GSS is able to shorten construction schedules by up to 50% and reduce project costs by up to 45%.

1.0 INTRODUCTION

Highway-rail grade crossings pose a significant safety risk to motorists. Data shows that approximately 1 in 10 crossing collisions result in a fatality., DOT/FHA(1) As a result, federal aid programs such as the Railway-Highway Crossings Program have been created across North America with the purpose of improving grade crossing safety. These programs provide funds to eliminate hazards and improve safety measures at grade crossings., DOT/FHA(2) The majority of grade crossing locations use these funds to install warning devices and signage. While these do help in reducing the number of collisions, the most effective solution is a complete grade separation of road from rail. However, grade separations are often labeled unfeasible due to their high expense and restrictive constraints, the largest of which is the limited allowable track closure time. Using normal construction practices, elaborate temporary works such as detour tracks (shoofly) or temporary bridge structures are often required by the railroad in order to maintain rail service while the permanent bridge is under construction, greatly raising the cost above that of a typical bridge construction project. As a result, a need was identified for a cost-effective way to separate a rail-road grade crossing without the need for costly temporary works while still working within the railway constraints. As such, Grade Separation Systems (GSS) was developed.

GSS is an innovative new construction technology which utilizes ABC practices to construct an at-grade rail bridge and underpassing roadway. By using precast segments and redefining the construction sequence, GSS is able to eliminate the need for temporary works such as detour tracks and temporary bridges, while still operating within the railway constraints.

2.0 GRADE SEPARATION SYSTEMS

GSS uses only traditional heavy civil construction methods with a redefined sequence of steps, resulting in a more efficient grade separation of a highway-rail crossing. By utilizing ABC concepts, GSS is able to fully construct the permanent bridge structure prior to excavation, reducing both the amount of temporary materials used and the track closure time required to construct the bridge. GSS further reduces the track closure time by maximizing the work that is performed outside of the rail clearance envelope, which is work that can be completed without interrupting the railway. The complete methodology of Grade Separation Systems is explained below.

2.1 Method

GSS begins with the substructure construction. To start, caisson liners are installed in pairs along the railway at the abutment locations. The liners are placed such that each is located a minimum of nine feet from the centreline of the track, which is the rail clearance envelope as specified by AREMA (Figure 1). Placing the caisson liners outside of this envelope will allow work to be completed on them without interference to the railway.

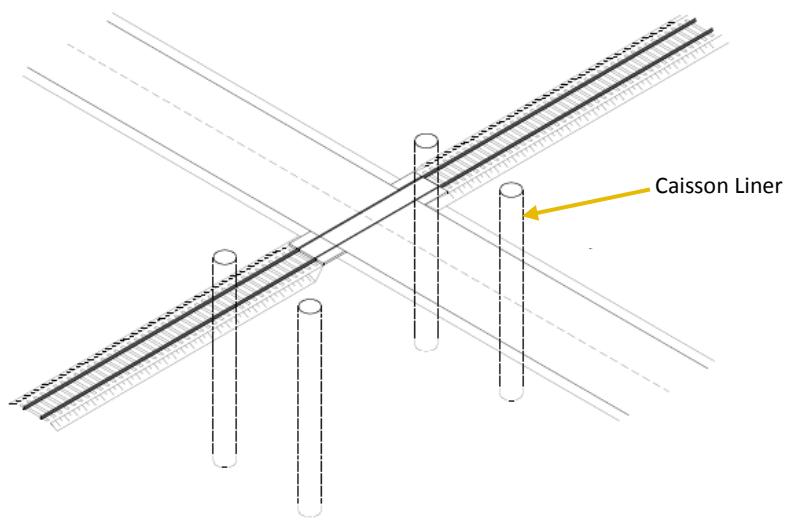

Figure 1: Caisson liner placement

Meanwhile, partial abutment segments are precast. These segments are long enough to span the rail clearance envelope, which allows them to be buried beneath the railroad and extend such that work can be completed at their ends without interruption to the railway. Prior to placing the precast segments, the ends are fastened to modular trench boxes as shown in Figure 2. The trench boxes are designed to withstand both train and soil loads, and will also serve as formwork when the abutment extensions are poured.

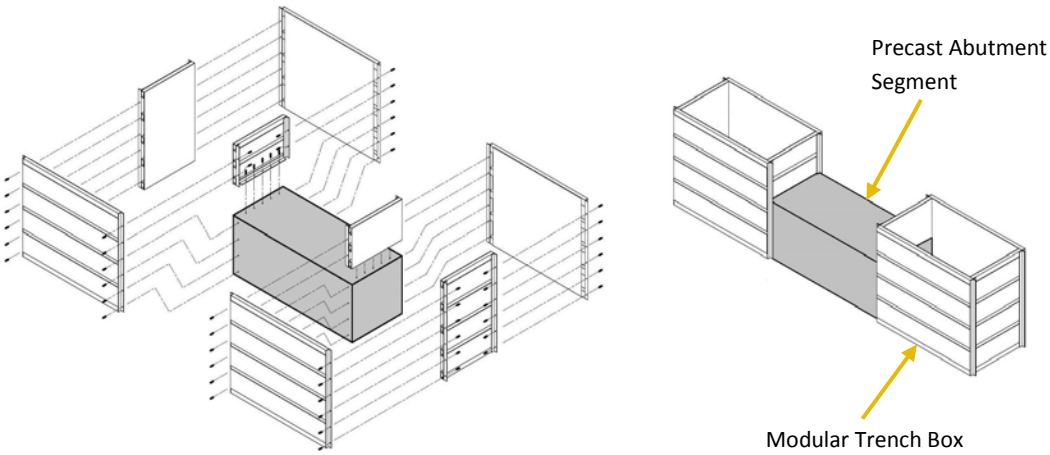

Figure 2: Precast Assembly: precast segment joined to two modular trench boxes

The complete assembly, called the precast assembly, is buried beneath the railway in a short rail closure – as little as 4 hours – to be expanded into the permanent substructure. During the closure, a trench is dug across the track around a pair of caisson liners. A guide channel housing a steel waler is welded onto the caisson liners before the precast assembly is crane-lifted into place. The precast assembly will sit above the guide channel, which will be utilized later on to excavate beneath the bridge, and such that a caisson liner is within each trench box. This is shown in Figure 3.

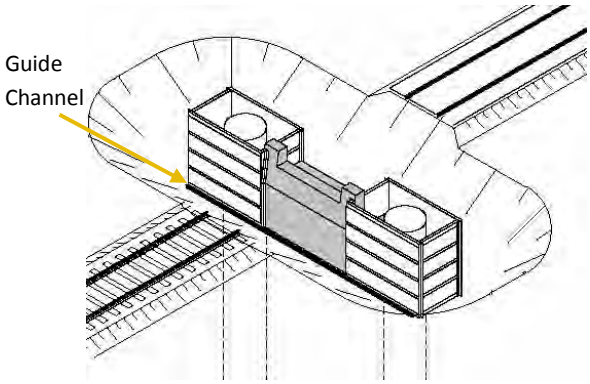

Figure 3a: Guide channel and precast assembly placement relative to railroad

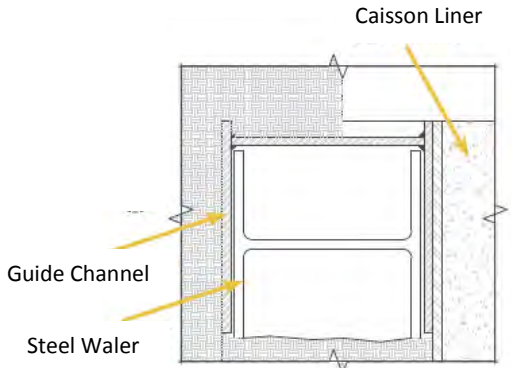

Figure 3b: Guide channel containing steel waler fastened to caisson liners

Once the assembly is in place, the trench is backfilled over the precast segment and around the trench boxes. The area is re-ballasted, the track is reconnected and the railway is reinstated over the now buried assembly (Figure 4).

A precast assembly is required at each abutment or pier location. The precast assemblies can be placed all at once or over separate closure times. If placed over separate closure times, work can continue within the trench boxes of the placed assembly while waiting for the additional precast assembly placements.

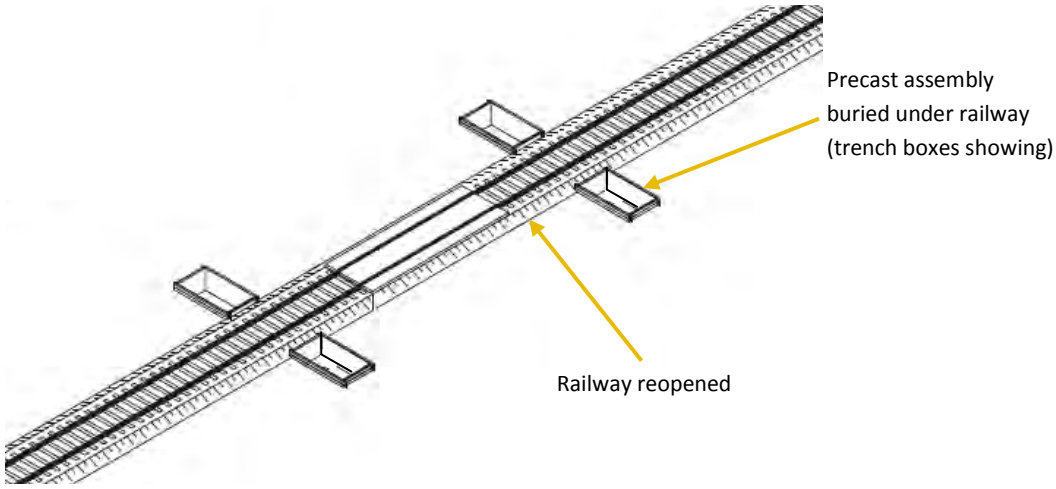

Figure 4: Railway reinstated over precast assemblies

The use of the trench boxes allows work to continue from outside of the rail clearance envelope. The top portions of the caisson liners are cut off, reinforcing steel is placed throughout the caisson liners and trench boxes, and the precast segment is integrated with the cast-in-place portion through either post-tensioned steel or mechanical couplers. With this complete, concrete is poured for the abutment extensions. Finally bearing pads are placed with precision to ensure the superstructure will bear on the cast-in-place portion of the substructure. Figure 5 shows the work to be completed within the trench boxes.

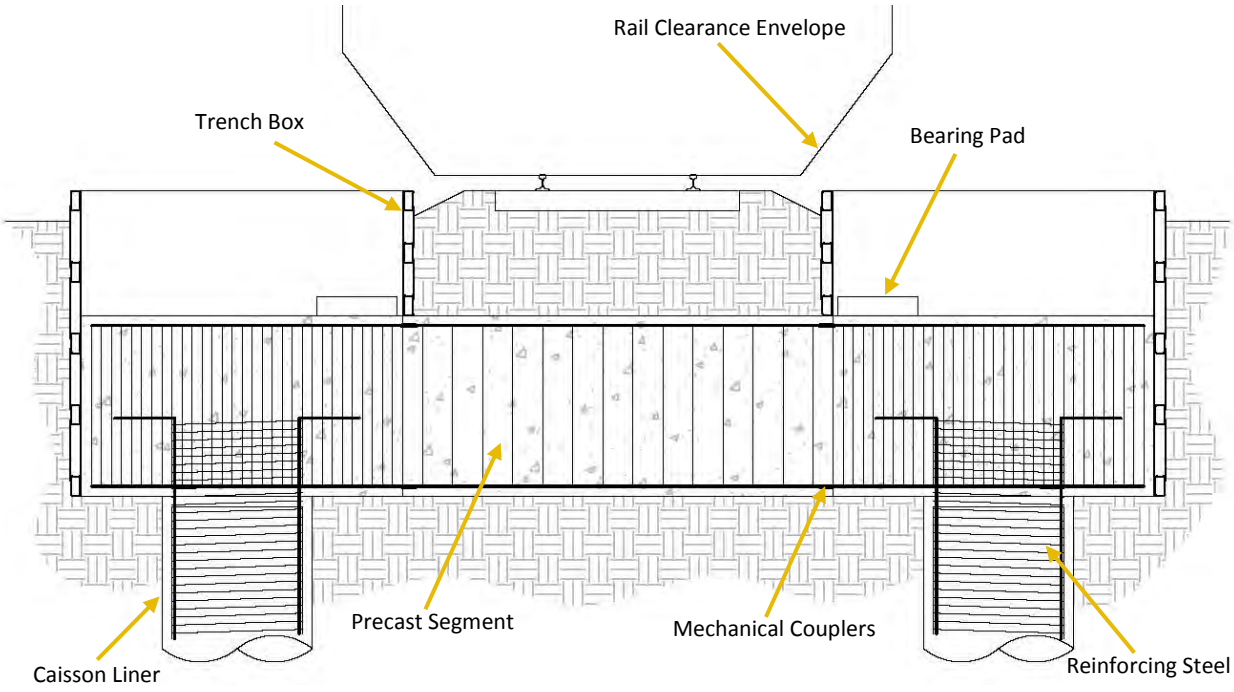

Figure 5: Cross-section of precast assembly after abutment extensions are poured

With the substructure constructed, work moves to the superstructure. GSS can accommodate any type of bridge span, but the method of placement may vary based on the weight of the span. A steel span 60ft long, complete with ballast and rails weights approximately 200,000lbs and can be lifted into place using tandem cranes. Heavier spans can be assembled on rails beside the track and moved into place with a lateral slide. In each instance, a 4-6 hour rail closure is required to trench between the abutments and place the span. With the trench dug, the trench boxes are removed prior to the span placement (Figure 6).

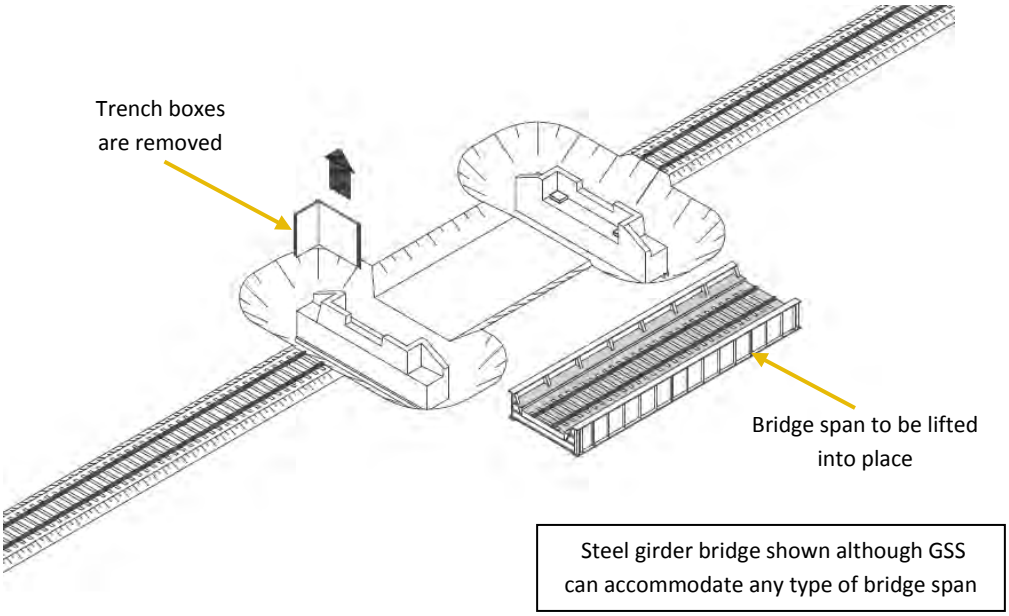

Figure 6: Rail closure to place bride span

The spans include both the ballast and rails prior to their placement to reduce the required track closure time. Once the spans are moved into place, the new track only needs to be connected to the existing before the railway can be reopened. As this is the final rail closure required in the GSS method, the railway is permanently reopened (Figure 7).

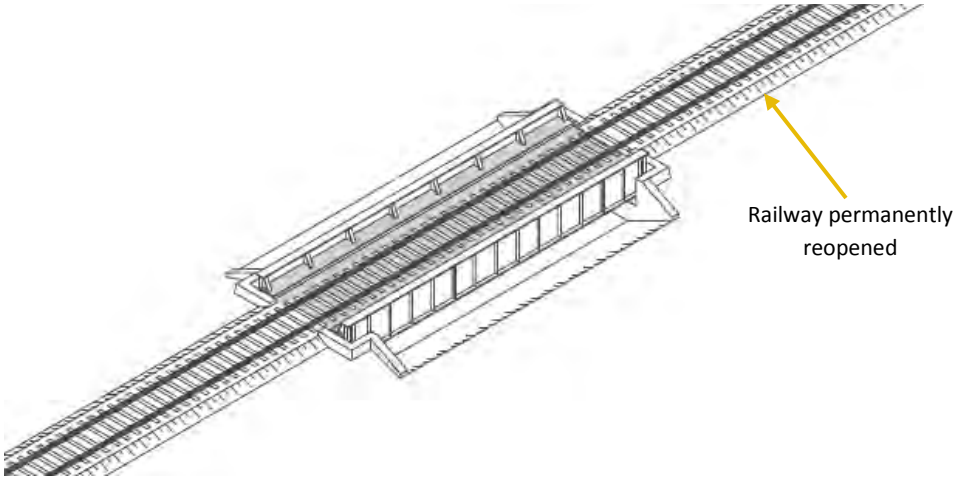

Figure 7: Railway reinstated after span placement

With the bridge fully constructed, the next step in the GSS procedure is excavation for the new underpass road. Either sloped or vertical excavation can be used. Sloped excavation is done using standard construction practices; vertical excavation requires a new method to safely excavate beneath the fully constructed bridge. Therefore the foot-at-a-time vertical excavation method was developed. This procedure utilizes the guide channel and steel waler that were previously placed beneath the precast assembly.

2.2 Vertical Excavation Procedure

The foot-at-a-time vertical excavation procedure begins by locally excavating directly beneath the guide channel to a depth of one foot until the steel waler that is housed within the guide channel can be lowered. A second steel waler is then slid into the guide channel so that it sits on top of the original waler. One foot below the original waler is again excavated until the two walers can be lowered together, and a third is slid into the space within the guide channel. This process is continued until the desired excavation depth is reached. To facilitate integration and sliding, guide plates can be welded onto the steel walers prior to their placement in the guide channel. The walers will drop due to their self-weight, or can be lowered with the help of a hydraulic jack if required. Throughout this method, a temporary retaining wall is built with the walers that can double as the back formwork for the permanent abutment walls. Figure 8 below illustrates the procedure.

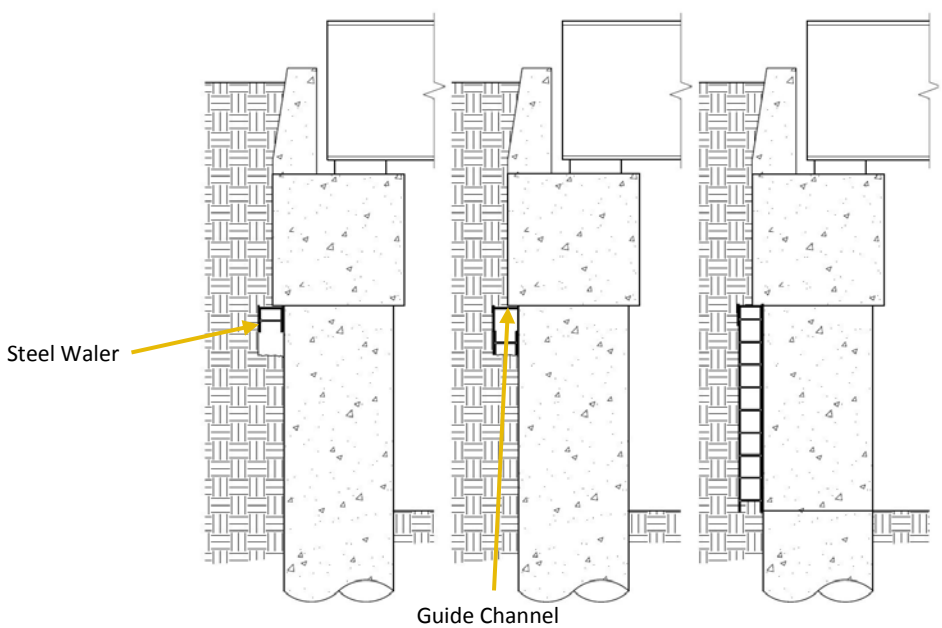

Figure 8: Foot-at-a-time vertical excavation procedure

Once the vertical excavation is complete, the permanent abutment walls are poured using the walers as the back formwork. Similarly, retaining walls are poured as required along the excavated length. With all structures completed, the underpass roadwork is performed, completing the grade separation (Figure 9).

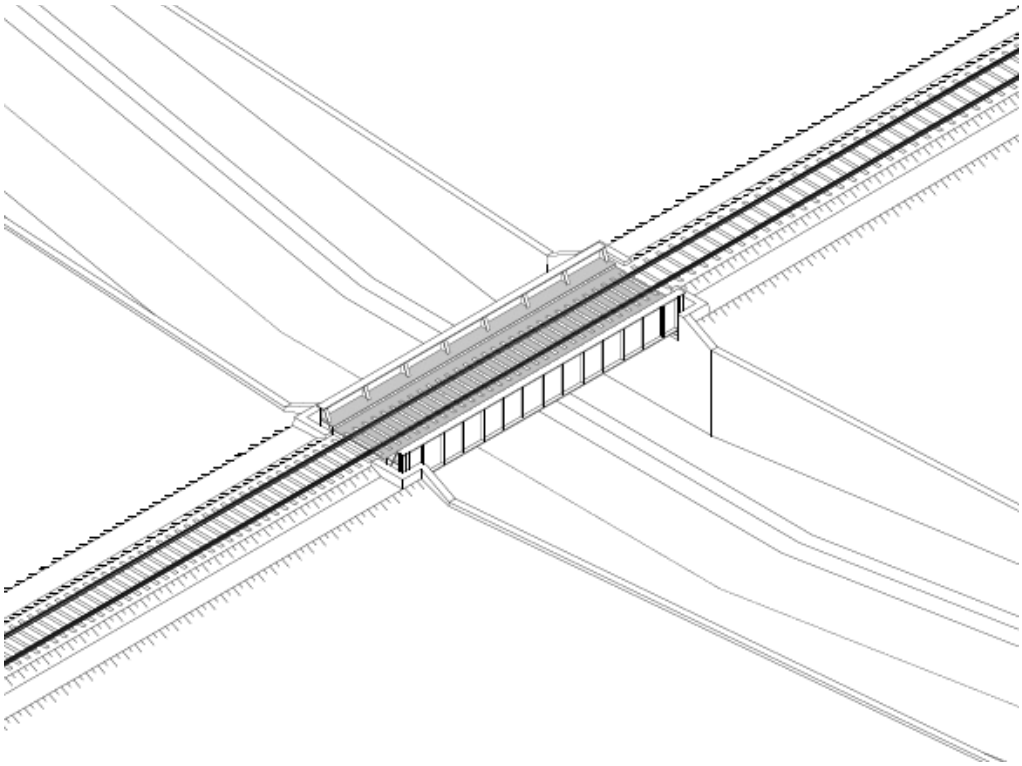

Figure 9: Completed grade separation

3.0 COMPARISON TO CURRENT GRADE SEPARATION METHODS

3.1 No Temporary Rail Structures

The innovation of GSS lies within the altered sequence of construction, specifically with excavating at the end of construction. One of the benefits that results is eliminating the need for a rail detour or a temporary bridge structure, both of which are constructed to allow the rail to operate in spite of the excavation beneath the main railway. With GSS, the permanent bridge itself serves this purpose, as it is fully constructed prior to excavation. Since its construction is coordinated with the railroad and only requires very short closure periods, the need for a rail detour during the bridge construction is also eliminated. By eliminating the need for either a temporary track or a temporary bridge without the need of any other temporary structure to replace them, both the project schedule and cost can be greatly reduced.

3.2 Ability to Keep Roadway Open throughout Construction

Another benefit over traditional grade separation practices is the ability to keep the road open to traffic throughout construction. This is possible for multi span bridges with a pier in the center of the road. Traffic is maintained at a reduced lane capacity by first deviating traffic away from the centre of the road to provide space for the abutment construction. Then, traffic is detoured onto one side of the road, allowing the opposite bridge span to be placed. Traffic remains on this half of the road while temporary shoring is

installed along the middle and far side of the road, then also while excavation occurs between thetemporary shoring. Permanent abutment and retaining walls are poured and roadwork is completed on the newly excavated half of the road, which allows traffic to be moved over to this side. With traffic then operating on the completed half of the road, the remaining bridge span is assembled and placed, and excavation occurs. Retaining walls and abutment extensions are poured on the second half of the road, roadwork is completed, and traffic can be restored to its full capacity on the new underpass. Figure 10 below demonstrates the construction staging required.

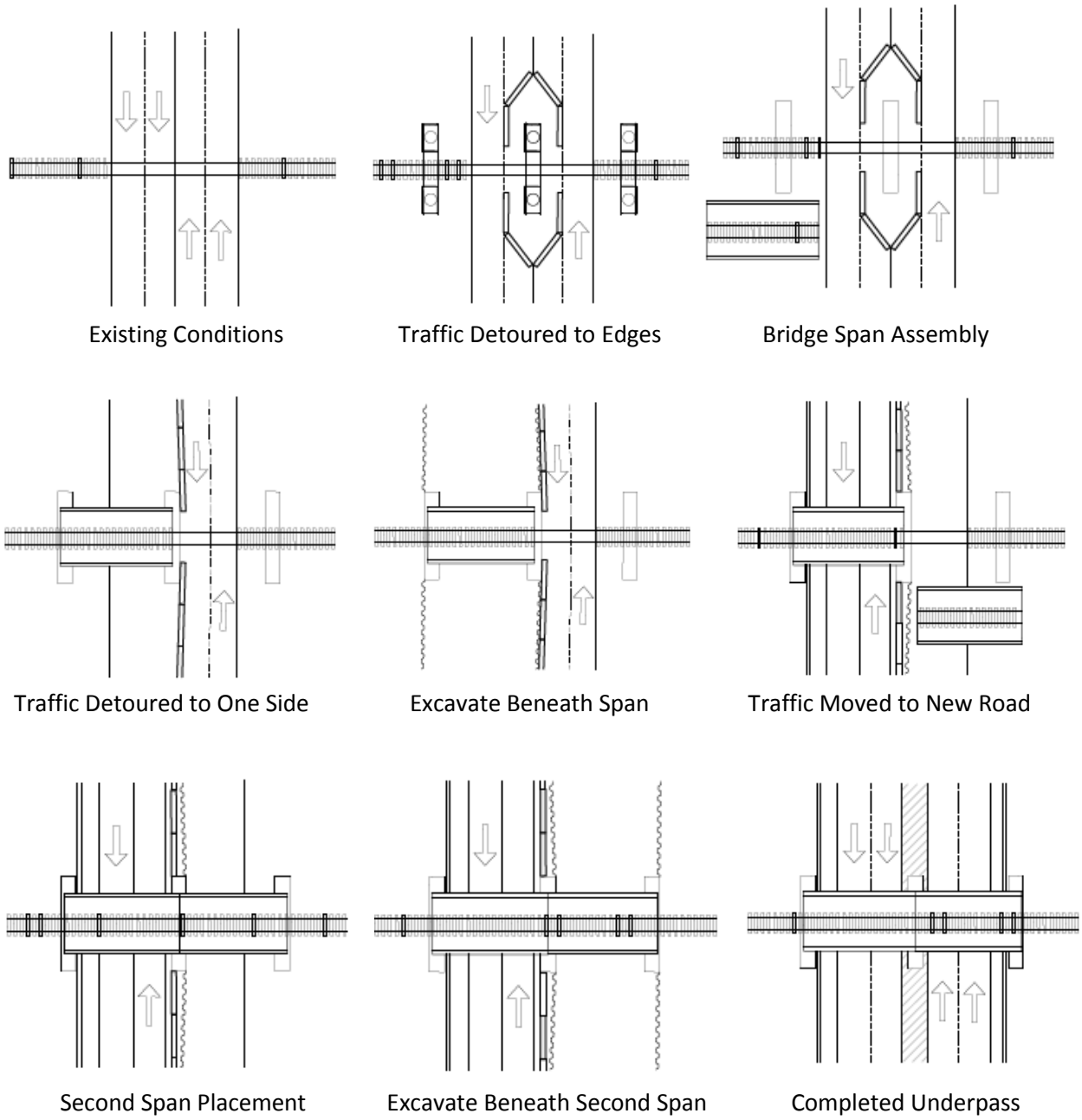

Figure 10: Construction staging to keep road open throughout construction

3.3 Cost Benefits

GSS technology offers significant savings in overall project costs. Using only permanent elements during construction eliminates both the need for temporary materials and unnecessary steps in the construction procedure, saving costs on material and labour. It is forecast that GSS can save up to 45% when compared to conventional construction methods. This increased efficiency is also predicted to reduce the overall construction schedule by up to 50%.

4.0 OTHER APPLICATIONS OF GRADE SEPARATION SYSTEMS

In addition to the single track, single span procedure outlined above, GSS can also be used in both multi-track and multi-span procedures. The system can be modified as required based on the number of tracks and spacing between tracks to accommodate almost every situation. Additionally, GSS can be applied specifically for road-widening scenarios, where similar construction sequencing can be used to add lanes to an underpassing thoroughfare. For more information about GSS, visit www.artengineering.ca/GSS.

5.0 CONCLUSION

Grade Separation Systems was developed in response to the need for a more efficient and affordable highway-rail grade separation. By using ABC concepts and altering the traditional sequence of bridge construction, GSS is able to meet all railway constraints without requiring costly temporary structures. The result is a cost-effective grade separation method, leading to a safer transportation network across North America.

6.0 REFERENCES

1. U.S. Department of Transporation, Federal Highway Administration. *Railroad-Highway Grade Crossing Handbook - Revised Second Edition August 2007 (Sections 1 & 9)* https://safety.fhwa.dot.gov/hsip/xings/com_roaduser/07010/sec09.cfm
2. U.S. Department of Transporation, Federal Highway Administration. *Railway-Highway Crossings (Section 130) Program* https://safety.fhwa.dot.gov/hsip/xings/
3. U.S. Department of Transporation, Federal Railroad Administration. *Driver Behavior at Highway-Railroad Grade Crossings: A Literature Review from 1990-2006* https://www.fra.dot.gov/eLib/Details/L01598
4. Ivantchouk, Artem; Carson, Eric William (2016). *Canadian Patent No. 2920654 & 2936215.* Canadian Patent and Trademark Office.
5. Ivantchouk, Artem; Carson, Eric William (2016). *United States Patent No. 10435853 & 10435854.* United States Patent and Trademark Office.

Modeling UHPC Link Slabs for the Wilmington Viaduct Bridge Rehabilitation Project

Loai F. El-Gazairly, Ph.D., P.E., Associate, Whitman, Requardt and Associates, LLP, 804-327-5255, lelgazairly@wrallp.com
David A. Nizamoff, P.E., Associate, Whitman, Requardt and Associates, LLP, 443-224-1639, dnizamoff@wrallp.com

INTRODUCTION

The presence of open joints in modern bridge construction causes deterioration of substructure units as well as substantial maintenance problems at the bearings and girder ends. Leakage at the joints initiates concrete spalling/deterioration of the concrete substructure elements and corrosion of steel bearings and girders due to the presence of chlorides used in road deicing salts during winter storms. These conditions result in substantial maintenance costs to owners. Recent applications of Ultra High Performance Concrete (UHPC) link slabs to eliminate deck joints has proved to be effective in reducing substructure, bearing, and girder end deterioration, increasing deck durability and ride performance, and significantly reducing future maintenance costs. They are also considered a new trend in Accelerated Bridge Construction (ABC) as they reduce construction/repair time resulting in rapid restoration of traffic along major highways. Recently, the Delaware Department of Transportation (DelDOT) has been evaluating the application of UHPC link slabs on its I-95 corridor rehabilitation project located in Wilmington, Delaware. This presentation discusses the implementation of the UHPC material and its structural behavior within the project.

ABSTRACT

The I-95 Wilmington Viaduct in Wilmington, Delaware is a sixty-simple span steel multi-beam bridge scheduled for rehabilitation in 2021. Work will include substructure repair, parapet replacement, deck overlay replacement, and transverse bridge deck joint replacements. Whitman, Requardt and Associates (WRA) is investigating the removal of fifteen (15) failing transverse bridge deck joints via replacement with UHPC link slabs. In addition to the benefits of lower future maintenance, UHPC link slabs will accelerate the construction process by limiting the amount of required deck removal, eliminating the timely installation of a conventional armored joint system, and concrete cure time. In addition, UHPC link slabs will provide an overall cost saving in comparison to a conventional joint replacement. Other advantages of using UHPC link slabs are: eliminating the construction complexities associated with placing an armored strip seal system, extending the service life of the adjacent structural elements as they will be protected from the environment and increasing the long-term durability and performance of those joints located over the piers. Similar applications completed by the New York State Department of Transportation (NYSDOT) suggests that the UHPC material is performing adequately with acceptable crack spacing control to prevent moisture and chloride penetration within the depth of the link slab. The NYSDOT application was based on using the link slab in conjunction with elastomeric expansion bearings at the ends of adjacent spans (i.e., at Exp.-Exp. locations). WRA is exploring the use of the NYSDOT approach to extend the application of UHPC link slabs at superstructure locations with different simple span end conditions supported by steel sliding

bearings, i.e., Fix-Fix, Exp.-Exp. and/or Fix-Exp. LARSA-4D was used to model the three-dimensional non-linear integrated behavior of the UHPC link slab within the bridge structure. The computer model included the non-linear properties of the UHPC material as well as its cracking and ultimate response. The analysis considered the debonded length of the link slab over the girders and was able to predict the strain level at which the cracks (within the link slab) initiated. Within the model, the non-linear link slab elements were able to depict the load reversal cycles (tension/compression) within the link slab under the application of live loads. It also accommodated any change in the UHPC properties for more general parametric investigations. The model covered the structural response of the UHPC link slab with different support conditions. Results have shown that the UHPC link slabs could be considered for use beyond just the Exp.-Exp. conditions and may extend the use of this detail to more structures. The UHPC link slab proposed by WRA has the potential to accelerate the rehabilitation process, reduce future maintenance costs, and increase structure durability.

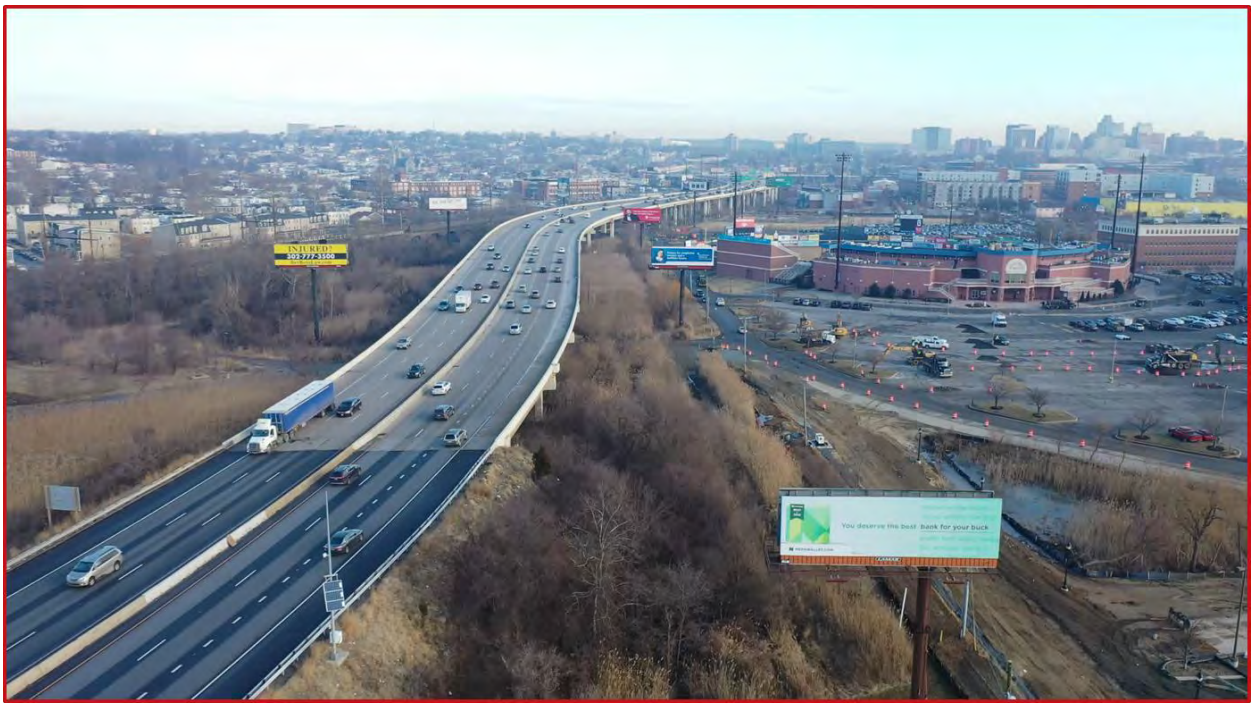

The I-95 Wilmington Viaduct

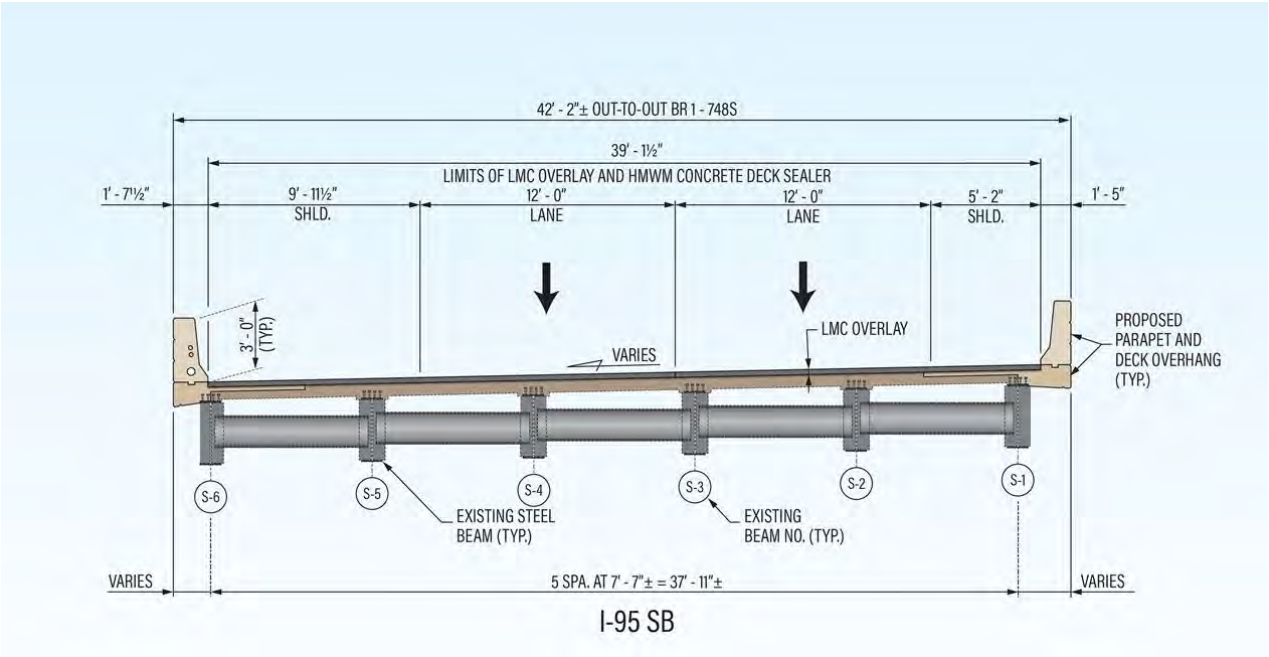

Transverse section at Pier 56S (I-95 Wilmington Viaduct SB)

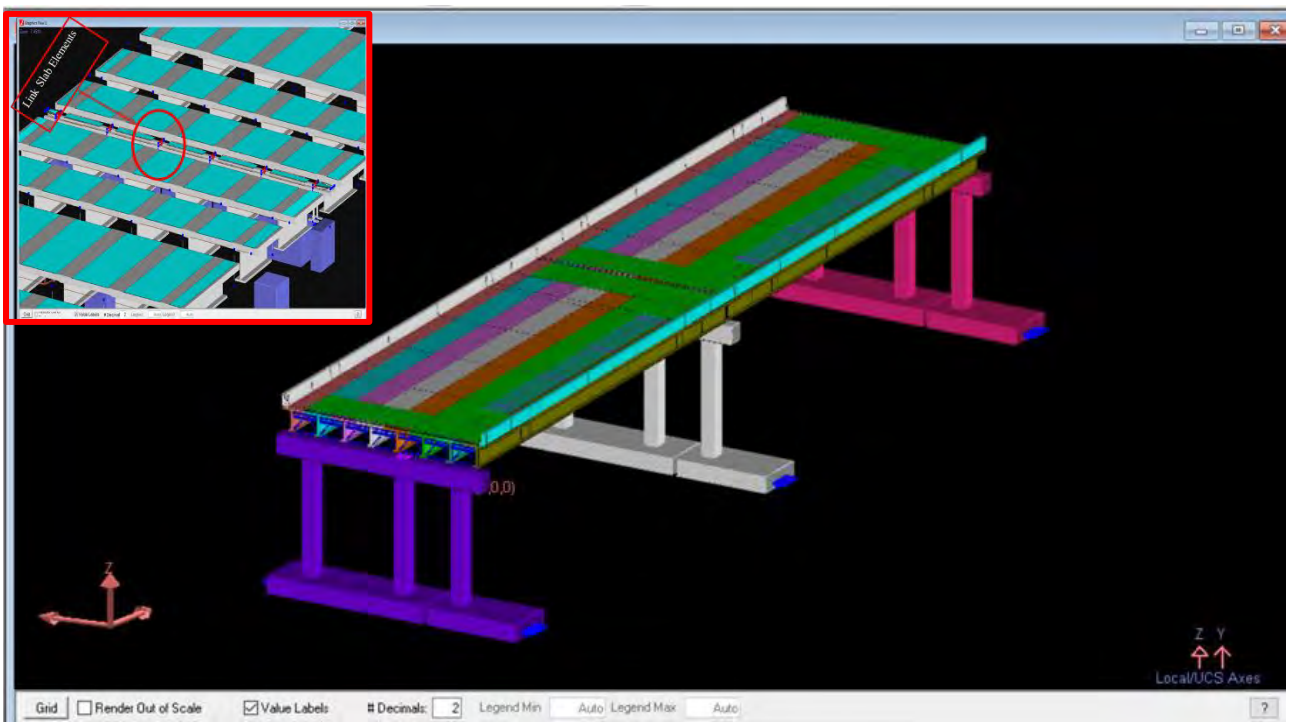

LARSA 4D model of link slabs along the I-95 Wilmington Viaduct project

Correlation Between Tensile Strength & Modulus of Rupture for Ultra High-Performance Concrete (UHPFRC)

Zoi Ralli Ph.D. Candidate, York University. (416-848-9099), zoiralli@yorku.ca
Stavroula J. Pantazopoulou, Ph.D., Professor, York University. pantazo@yorku.ca

ABSTRACT

The increased use of ultra-high-performance concrete as an alternative to conventional concrete in bridge construction and infrastructure has brought forth the need for reliable assessment of the actual mechanical properties from samples taken during preparation of the mix and in the field during placement of the material. Particular interest is in the tensile strength and tensile strain ductility of UHPFRC that effectively limits crack propagation and minimizes the width of cracks, which in turn greatly improves the durability of the structure. However, design standards face the conundrum that whereas direct tensile tests would be ideal for characterization of tensile strength and resilience, yet these tests are very difficult to conduct. Instead, what has prevailed is the flexural prismatic beam test, where the tensile strength and tensile stress-strain properties of the material are derived through inverse analysis. An important concern arises from this state of practice: material strengths calculated from flexural tests are routinely several fold the values obtained from direct tension tests. Objective of the paper is to correlate through detailed finite element analysis the mechanics and state of stress of the different test setups so as to establish the relevance of the experimental results with the intrinsic tensile strength of the material. Particular emphasis is placed on the influence of experimental configuration on the response of specimens subjected to four-point bending.

INTRODUCTION

The experimental characterization of the tensile strength of UHPFRC is mainly based on procedures in codes and standards used for fiber reinforced concrete (FRC). The most reliable, and yet most difficult to conduct test for determining the tensile behaviour is the direct tension test. The specimen is usually a prism subjected to uniaxial tension and characteristics such as distribution, spacing and width of cracks should be recorded at ultimate stress. The variation in geometry, boundary conditions and size of the specimens complicates the development of a standard test and prevent correlation between different studies.

A common practice is to evaluate the tensile behaviour indirectly, through tests that are controlled by some form of tensile failure. For example, tensile strength of FRC's is often obtained through variations of the well-known Brazilian splitting test, where a cylindrical specimen is subjected to compressive load, along two diametrically opposed generating lines of the cylinder. Uniform transverse tensile stress state is generated almost lengthwise the diameter plane that is parallel to the applied loads. Failure occurs once the tensile strength of the material is reached. Despite the simplicity of the experimental setup and procedure, uncertainty arises regarding the actual stress distribution.

Led by the necessity to overcome the intrinsic difficulties of conducting direct tension tests, several codes and standards adopted flexural tests (i.e. modulus of rupture tests), either in three-point or four-point bending as an alternative way to evaluate the tensile behaviour of the material. They are used to determine toughness parameters and thus establishing the post tensile and strain hardening behaviour. Through an inverse analysis, the constitutive relationship of uniaxial tensile stress versus crack opening is calculated from the flexural test results. Several back-calculation approaches are available in the literature from various standards and researchers. However, the majority of them leads to overestimation of the true tensile strength, due to simplifying assumptions regarding the kinematics of the bending problem and the material behavior.

Three-point bending tests in several standards are usually performed on notched specimens with the exception of ASTM C293/293M[1] which is an unnotched three-point bending test. The specimen with specified dimensions and a deep notch at midspan is placed in a center-point loading configuration. When the flexural strength is reached at the tip of the crack, one single crack initiated by the notch propagates and the absorbed energy is assumed to be entirely due to the fracture along the notch. Therefore, for the characterization of the behaviour, flexural toughness or load versus crack mouth opening displacement

(CMOD) could be used. Although notched three-point bending test is suitable for material characterization of FRCs, it is not recommended to assess reliably the strain-hardening behaviour of UHPFRC. Multi-microcracking that may appear around the notch hinders conventional inverse analyses proposed by RILEM and MC2010 as they assume that CMOD is due to the opening of a single crack. This leads to overestimation of tensile properties of strain hardening UHPRFC, and thus notched three-point bending tests should be generally avoided.

Unnotched four-point bending test have prevailed in codes and standards. The main advantage of the test configuration is the constant bending moment in the central part of the span, between the point loads. However, the length to height ratio of the specimen affects the stress field as the lower it goes the stronger is the influence of the stress disruption under the point loads. For simplicity, the latter effect is neglected and the strain-hardening behaviour is determined through the load vs midspan displacement curve according to a smeared crack approach. The most common version of four-point bending test is the third point bending test, where the distance between the point loads is equal to one third of the beam span. Unnotched four-point bending test is considered less biased than the three-point option, and therefore more appropriate for UHPFRC as the failure will take place in the weakest section and not under the point load.

So far, French (AFNOR) and Swiss standards are the only standards that include tensile properties tests especially for UHPFRC. A direct tension test is proposed in Swiss standard, whereas French Standards recommend a notched three-point bending test. However, both standards have also an unnotched four-point bending test for UHPFRC. According to AFNOR[2], there are three types of UHPFRC: (i) strain-softening, (ii) low strain-hardening and (iii) high strain-hardening. For the first two categories, two different tests should be conducted. Firstly, a third point bending test is required for the establishment of cracking strength. Following the assumption that the first crack can be visually distinguished at the point where significant loss of linearity takes place, the cracking strength is determined. The second test to be performed is a notched three-point bending test with recording of the CMOD at crack strength. The next step is a point-by-point inverse analysis used to derive the post-cracking behaviour. Although the process described above seems to be easy, the subjective nature of the first cracking strength determination and the untrue - for strain hardening materials - kinematic assumption of linear curvature distribution during loading and unloading may lead to inaccurate results. The last class refers to the strain-hardening response of UHPFRC, which is investigated through an unnotched third point bending test on a thin specimen. The bilinear stress-strain behaviour is determined through a point-by-point simplified inverse analysis method.

The Swiss standard, on the other hand, does not suggest different tests for the different UHPFRC types. Direct tension test and third point bending test are proposed, and it is required that both be performed. The direct tension test involves a dog-bone shaped specimen with specific geometry and a fixed end boundary condition. The flexural test specimen should have also specified dimensions and during the test, load-displacement at midspan should be recorded, in order to obtain a bilinear tensile stress-strain hardening response through a simplified inverse analysis procedure.

In order to determine the tensile properties of UHPFRC, the results obtained from the indirect tests proposed above have to be used in inverse analysis. The available approaches aim to reproduce the experimental results by implementing numerical models based on predetermined model forms of the uniaxial tensile and compressive stress-strain relationships. Thus, inverse analysis enables determination of the model parameters, rather than revealing the intrinsic tensile properties. This is particularly true for methods that are based on experimental points from tests; these are known as simplified methods.

Inverse analysis is fraught with the uncertainties necessarily introduced in the analysis of a model with the intent to match the experimental evidence; these include kinematic assumptions implicitly made when defining strain-displacement relationships, stress-strain models for the response of the specimen in the compression zone but also the assumed form of the tensile stress-strain envelope. A very important aspect is the actual degree of restraint provided at the supports and at the load points. To understand the significance of these variables on the expected results, this paper uses detailed finite element analysis to correlate the mechanics and state of stress of the different test setups that are routinely used in the literature so as to establish the sensitivity of the responses obtained to the intrinsic tensile behavior of the material.

A BRIEF REVIEW OF THE STATE OF THE ART

The degree of uncertainty in estimating the tensile strength of UHPFRC materials is depicted in Figure 1 which plots experimentally obtained tensile strength values for three different UHPCFRC materials using

direct tension tests and inverse analyses[3] (Yang, 2019); the latter was conducted using the method of Lopez[4], (Lopez, 2017) which was adopted in the CSA A23.1 Code[5] (CSA, 2019). The scatter of the results below the equal value line is points to a systematic overestimation of tensile strength obtained from inverse analysis as compared to the direct tension testing. Apart from the evident need of introducing pertinent safety factors when flexural tests are used to define the tensile strength property, the figure underscores the limited understanding currently available regarding the true tensile strength of UHPFRC. Note that the source of the discrepancy is not necessarily owing to the misleading attributes of the flexural test: direct tension tests are also criticized for their lack of the ability to recover a near uniform stress distribution after initiation of cracking from either edge on account of the acute eccentricity which is thus generated (Fig. 2a). In addition, owing to the thin spacing in the grips that are usually available in Universal Testing Frames, direct tension tests are likely to have a fiber distribution that is intensely two-dimensional as compared to the three-dimensional fiber distribution that may be attained in flexural prisms.

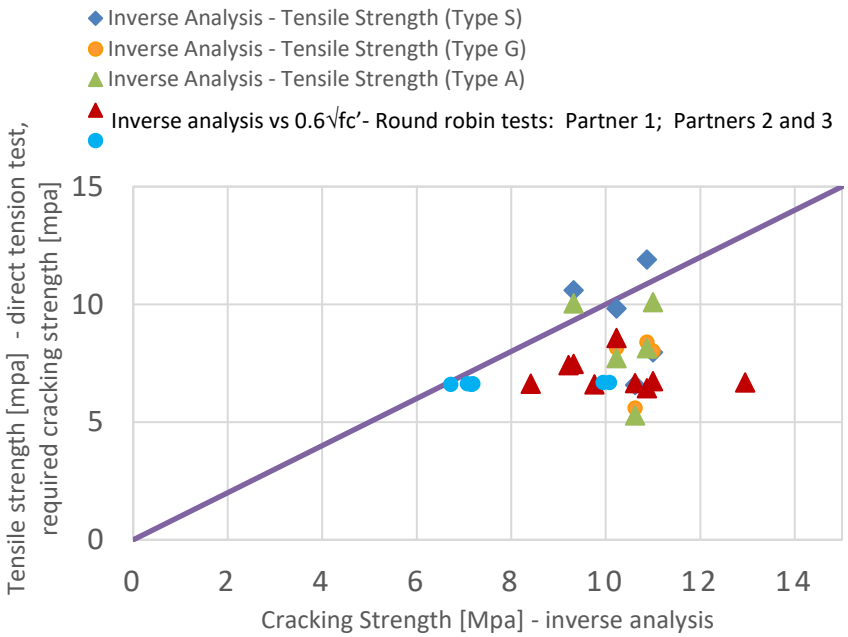

Figure 1: Comparison of results of direct tension tests and tensile strength values obtained from inverse analysis on tests conducted by three different test labs on the same UHPRFC materials (casting of specimens from a single mix by Partner 1). (Each point averages three identical specimens). Red and light blue circles compare results of inverse analysis with the estimate for cracking strength = $0.6\sqrt{f_c'}$.

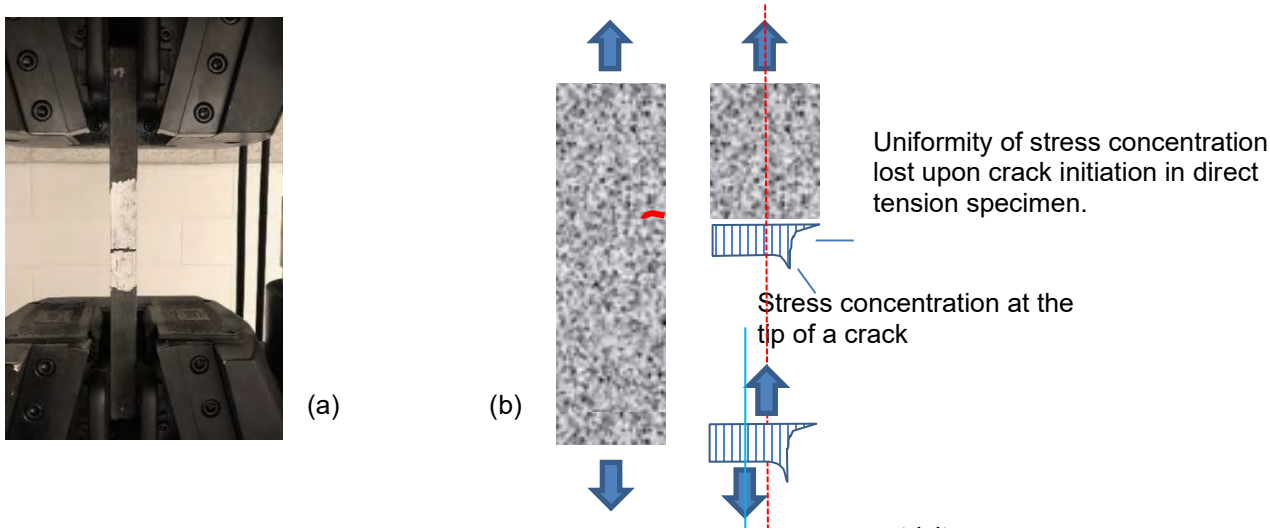

Figure 2: (a) Typical Direct Tension Arrangement – Side View: The specimen thickness is dictated by the available spacing of the grip (b) Eccentricity in direct tension specimen owing to the crack initiation leads to precipitous failure.

Inverse analysis conducted according to the simplified methods included in the codes (e.g. RILEM TC 162-TDF and MC2010) are straightforward but may lack accuracy. Both depend on the use of notched three-point bending test results according to EN-14651. Alternatives to these are approaches that rely on detailed finite element analysis to obtain the complete stress strain response – either iteratively, or through a point-by-point process have also been tried: in the former, the form of a constitutive model is assumed, while its parameters are determined through matching of experimental and analytical results; the latter approaches build progressively in each step the constitutive law.

In the simplified approach, the load-midspan deflection curve is obtained from flexural tests under monotonically increasing load. In strain hardening materials there is a range that is mildly ascending past the end of the linear range, identified by points P_y and Δ_y. This strain hardening range increases up to a peak load value P_{max} and a corresponding displacement Δ_{max}. Past the peak point initially there is a mild descend, at point P_u, Δ_u, which is associated with the onset of cracking localization and subsequent post peak descend in the response curve as the governing crack width grows. Load is converted into moment in the critical region (maximum moment in the beam between the point loads) through statics for known shear span length a (distance between support and impactor shafts); so $M_y=0.5\cdot a\cdot P_y$; $M_{max}=0.5\cdot a\cdot P_{max}$; and $M_u=0.5\cdot a\cdot P_u$. However, conversion of displacement to average curvature is less obvious unless both displacements at midspan and at both loading points are available through direct LVDT measurements. Here therefore is a primary source of uncertainty in simplified inverse analysis, since it is necessary to make an underlying assumption regarding the form of the strain-displacement relationship in the midspan, in order to reduce the displacement values into curvature at the critical section. Few researchers have reported results of this type obtained by a series of LVDTs [6](Baby et al, 2012). With the average strain is recorded with two LVDTs on the tension face in the segment between the point loads, then by assuming linear elastic behaviour in compression, stress equilibrium was established at midspan for each experimental pair of load-strain values, thereby building the tensile stress-strain law point-by-point. However, the prevalent assumption is to linearize the curvature distribution as depicted in Fig. 3(a) for stages that correspond to milestone events in the resistance curve either prior to, or after cracking[7,8] (Qian et al, 2007, Riguad et al, 2011). According to Georgiou and Pantazopoulou[9] (Georgiou and Pantazopoulou, 2017) the last of the points, should be taken to be very close to the maximum value in the post-peak: this point corresponds to tension crack penetration from the tension face by such an amount that it is the resultant moment M_u can no longer be supported (Fig. 3(c)).

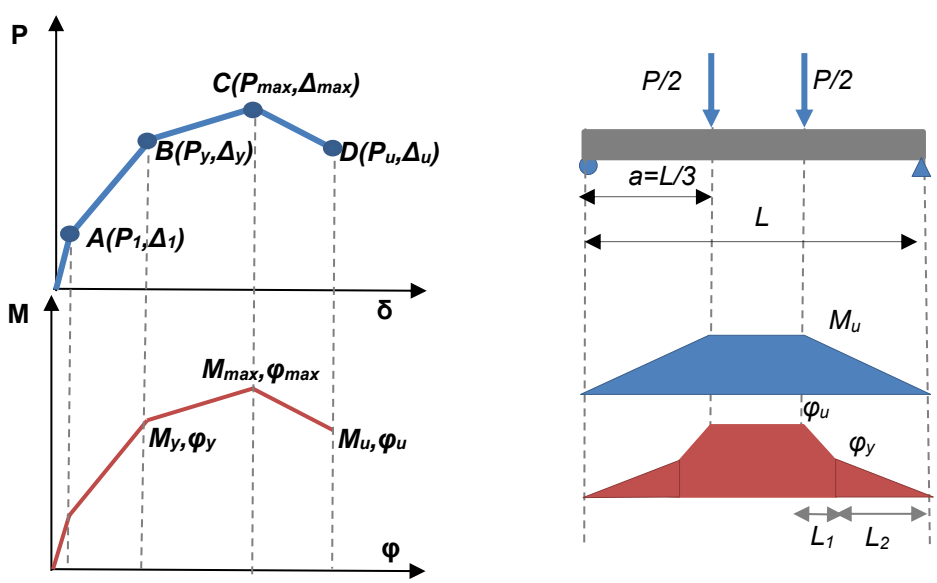

Figure 3: (a) Selection of milestone points on the load-displacement envelope. (b) To obtain the curvature – displacement relationship an assumption needs to be made regarding the "plastic hinge" zone (i.e. the zone L_1 in the figure, transitioning from the linear to the non-linear range).

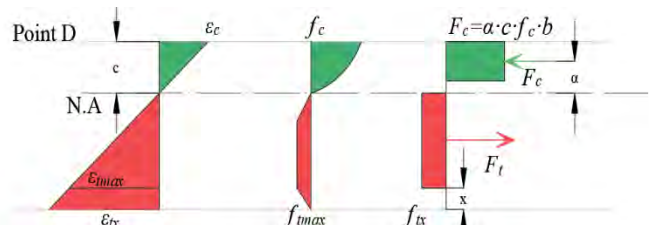

Figure 3(c): Onset of non-recoverable strength loss: When x – depth of crack penetration prevents equilibrium to be attained for moment M_u.

Other uncertainties associated with the milestone point selection are intrinsic to all simplified procedures. Some Standards and Codes prescribe this in an unambiguous manner: For example, the Canadian Standard Association[5] (CSA) adopted the inverse analysis proposed by Lopez[4] (Lopez, 2017) which refers to a five-point simplified inverse analysis for unnotched third point bending tests. The characteristic points of the load-deflection curve include the end of linearity (P_o,δ_o) that determines the initial slope of the resistance curve; Points 1 and 2 represent 75% and 40% of the initial slope, respectively. Point 3 corresponds to 97% of the peak load and Point 4 is 80% of point 3. Using the aforementioned points, cracking strength ultimate tensile strength and their corresponding strains are determined in order to establish a linearized tensile stress-strain. Basic assumptions of the method are linear elastic behaviour in compression, bilinear stress-strain tensile law until the peak and bilinear stress-crack opening behaviour at softening. The method takes into consideration the location of the crack and covers also the post-cracking behaviour. However, the method has three main restrictions: (i) is only valid for the case of third point loading, (ii) Point 3 has to be greater than Point 2 and (iii) applies only for beams with L/h=3 and L/h=4.5.

The restriction (ii) limits applicability of the approach to concretes with limited resilience range – for example it has been shown that the method is not directly applicable to prisms comprising Engineered Cementitious Composites[10](Pantazopoulou et al. 2019).

FINITE ELEMENT ANALYSIS OF GEOMETRICAL NONLINEARITIES OF 4PBT

For the most part, Finite Element analysis of UHPFRC tests are used to validate the experimental results through investigation of the nonlinear behaviour of the material. In this research, a finite element analysis was performed to study the effect of geometrical nonlinearities induced by the experimental setup, in an attempt to interpret the scatter shown in Fig. 1. To illustrate this influence on the results, constant prism dimensions are considered (75mm x 75mm x 280mm) and linear elastic material having a modulus of Elasticity of 48 GPa and Poisson's ratio of 0.18 (these correspond to measured UHPFRC properties of the materials used in obtaining Fig. 1). Tested under third point loading the typical specimen had a shear span of 75 mm, i.e., the shear span aspect ratio was =1. In the model studied, it was particularly interesting to identify the interactions between the specimen and its supports, so as to explain the observed differences in response between the tests, but also to proof test the emphasis placed by Standards recently (e.g. CSA A23.1 2019) on the details of the test setup. Thus, the entire testing mechanism including specimen, support and loading hardware were simulated in the ANSYS workbench, wherein the actual solids that represent roller and pin cylindrical supports and load impactors at third points were explicitly modelled as stainless steel shafts rather than being specified as pointwise constraints. Similarly, the steel plates under the shafts and the frictional action generated at the points of contact was a parameter of study. Steel hardware used for the testing was assigned a modulus of Elasticity equal to 193 GPa and a Poisson's ratio of 0.31. For simplicity, symmetry about the xy plane was considered so that half of the beam was analyzed. In Fig. 1 it was seen that three different commercially provided UHPFRC mixes were tested in identical triplicates, in three partner laboratories; important differences were observed between results from the three different testing teams, for otherwise identical specimens. To interpret the systematic differences between the results of the partners, every possible source of difference was explored in the present section in order to gauge its effect on the output (Figure 5). Apart from the size of the support and impactor cylinders which were different among the three partners, the type of supports (rollers on both ends with and without free longitudinal translation on either one or both ends), the type of contact (with or without friction) between all the components of the test is investigated. The available types of contact for static structural analysis and their differences are listed in Table 1. In the present study, only nonlinear types of contact were investigated.

Table 1: Types of Contacts available in ANSYS Static-Structural (ANSYS)[11]

Contact	Explanation	Type	Friction Coefficient μ	Allowed Sliding	Allowed Separation
Bonded	no sliding or separation between faces or edges is allowed	Linear	∞	no	no
No Separation	no sliding or separation between 3D faces of solids or 2D edges of plates		0	small	no
Frictional	two contacting geometries can carry shear stresses up to a certain magnitude across their interface before they start sliding relative to each other	Non-Linear	>=0	yes* (If $F_{sliding}>F_{friction}$)	yes
Frictionless	standard unilateral contact; that is, normal pressure equals zero if separation occurs		0	yes	yes
Rough	infinite friction coefficient between the contacting bodies where there is no sliding, but zero pressure if there is separation		∞	no	yes

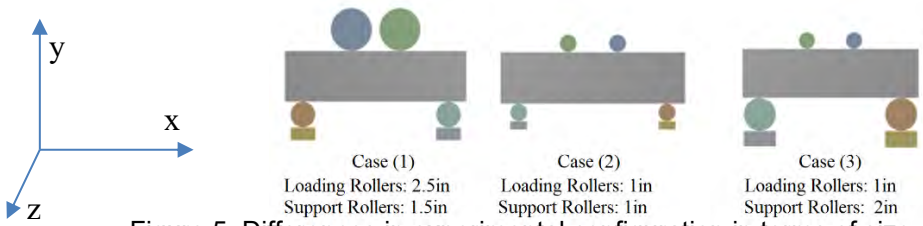

Figure 5: Differences in experimental configuration in terms of size of the rollers

Figure 5 depicts models of the three experiments compared, where the difference is in the size of the cylinder shafts used for support and impactor. The investigation focuses on: 1) size of rollers, 2) end support conditions, and 3) types of contact between specimen and the hardware, as well as between metallic components in contact with steel plates.

For the effect of the shaft diameter on the results, symmetry of supports was assumed in order to suppress other simultaneous effects owing to other variables. The analysis type was static structural with assumption of large deflections. The performance of the alternative models of the specimen were compared for midspan deflection equal to 0.05mm, which corresponded in the real experiments to nearly the attainment of peak load. In the tests, the corresponding vertical displacement at the point loads was in the range of 0.045mm. Where a frictional type of contact was used between components, the effect of friction coefficient μ was also studied for values 0.5 and 1. Frictionless contact was also considered. To study the effect of end support conditions, nonsymmetric supports were also studied modeling the entire length of the beam; in this case several combinations are considered, as depicted in Table 2 where the relevant abbreviations used henceforth to identify each analysis type is explained. Note that Cylinder 1 and 2 refer to the supporting steel shafts at the specimen ends depicted in Fig. 5.

Table2 : Cases of contact and support condition studied

Case	Support Cylinder 1	Support Cylinder 2	Contact between all bodies
RR-F	Roller	Roller	Frictional
PR-F	Roller	Pin	Frictional
PR-R	Roller	Pin	Rough

Effect of Roller Diameter

To study the effect of size of rollers, the case of roller-roller end support condition with frictional contact (μ=0.5) was used for each of the configurations in Figure 5. Taking advantage of symmetry one quarter of the beam was simulated by setting symmetry in yx and yz plane. The normal stress profile at the cross section at the midspan and under the point load is plotted in Fig. 6(a) and (b). It is observed that the effect of shaft radius is particularly important near the point of load application, where the intensity of local compressive stress increases with the decrease of radius indicating a significant stress concentration; note that case (3) had the largest size supports, and in the experiment it attained the lowest loads. The effect is attributed to the kinematic constraint imposed on the beam to wrap around the cylindrical surface of the

end shafts at the points of contact (see Fig.7). The intensity of the stress concentration is enough to locally crush the HPFRC concrete under the shafts with local compression stress levels in the order of 100 MPa (Fig. 6(b) while the midspan tensile stress is correctly quantified to be around 10 MPa (Fig. 6(a)), which was the value occurring in the tests at the peak point, just prior to cracking and subsequent strength loss. Furthermore, on account of the frictional coefficient a minor normal stress is observed at midspan, in the order of 0.2-0.3 MPa.

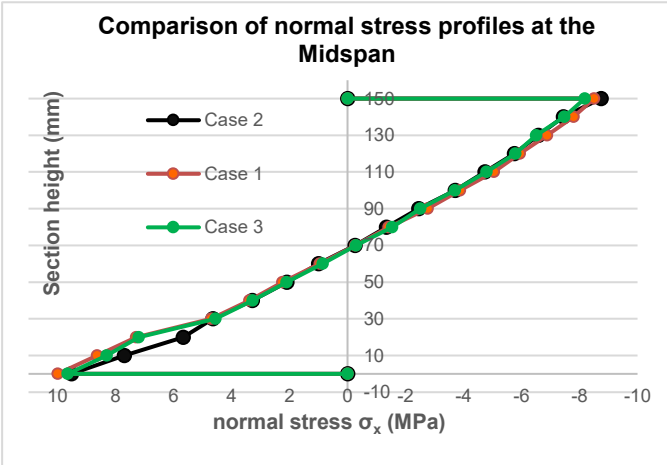

Figure 6(a): Comparison of normal stress profiles at the midspan for Cases 1, 2 and 3.

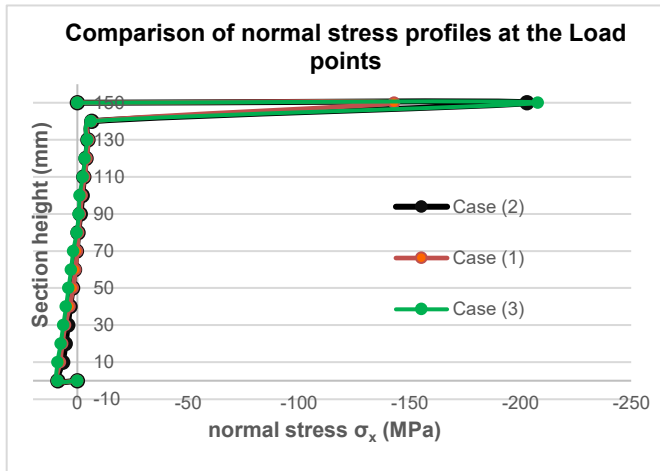

Figure 6(b): Comparison of normal stress profiles under the load for Cases 1, 2 and 3.

Figure 7: Local disturbance of the beams' elastica due to interference of the stationary rollers.

Table 3 lists the maximum stress values obtained for the same displacement milestone: as seen in the experiment, the three setups are organized in terms of stiffness according with the size of the support shafts. Stress fields for normal and shear stress are plotted in Fig. 8 where friction coefficient of 0.5 was considered. For Case 2 the minimum normal stress (-214MPa) was spotted on a point near the roller support while for the other two cases the minimum normal stress was spotted under the point load (-143MPa and -207MPa) . The figures depict a fundamental flaw of the prism experiments used routinely to assess tensile strength through flexural tests, by the strong evidence of the formation of a diagonal strut from impactor to support, indicating that owing to the low aspect ratio this zone performs as a D-region.

Case	Normal Stress @ L/2 $\sigma_{xx,mid}$(MPa)	Ave. Normal Stress @ h/2 $\sigma_{xx,h/2}$(MPa)	Eff. stiffness @ 0.05 mm K_{eff} (N/mm)	Max. Shear Stress τ_{xy} (MPa)	Reaction @ Roller R_y(N)	Max. frictional Stress σ_{fr}(MPa)
1: R-R	9.93	-0.2532	198.6	51.783	4414.6	24.532
2:R-R	9.52	-0.2416	190.4	62.5	4226.6	34.39
3: R-R	9.65	-0.2454	193	58.148	4265.2	32.422

Table 3: Resultant Stresses and Forces for Cases 1, 2, 3 for roller-pin end support condition

Effect of roller diameter on roller-pin support end conditions

In this section the effect of non-symmetric support conditions of the prism response is considered. Considering the contact frictional value μ=0.5, results are obtained assuming a roller in the left and pin at the right-hand side support; shaft dimensions corresponding to cases (1), (2) and (3) are used, and results

here are compared for the achieved stress intensities and distributions with their counterparts of Fig. 8 obtained considering symmetric roller supports. Table 4 summarizes the key results of the analysis. Based on the results, case (1) reaches the highest load for the displacement magnitude indicating also higher stiffness. In comparison, stress levels are higher in the roller-roller case for a given level of displacement, suggesting that given a limiting cracking strength, f_t', specimens tested under symmetric supports will crack earlier – at a lower load and displacement. This is actually consistent with the experimental observation.

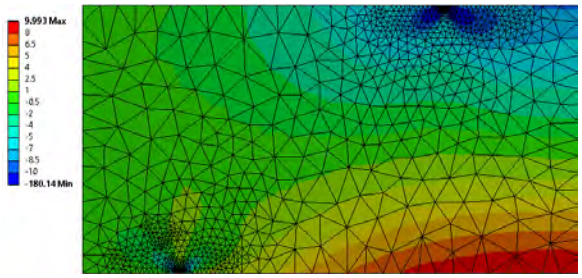

Figure 8(a): Resultant Normal Stresses for Case (1) with Roller-Roller

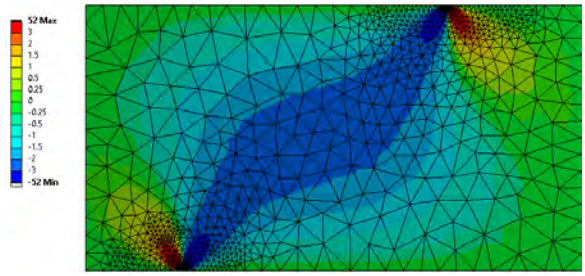

Figure 8(b): Resultant Shear Stresses for Case (1) Roller-Roller

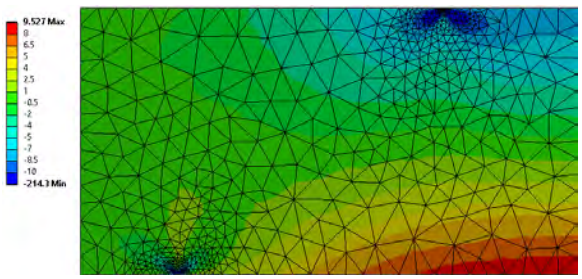

Figure 8(c): Resultant Normal Stresses for Case (2) with Roller-Roller

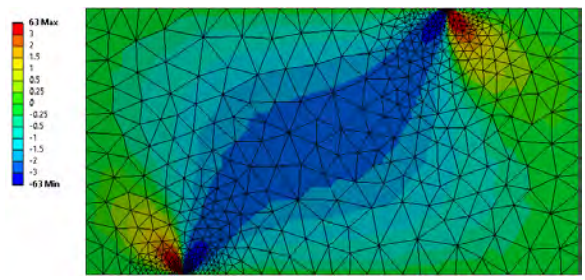

Figure 8(d): Resultant Shear Stresses for Case (2) Roller-Roller

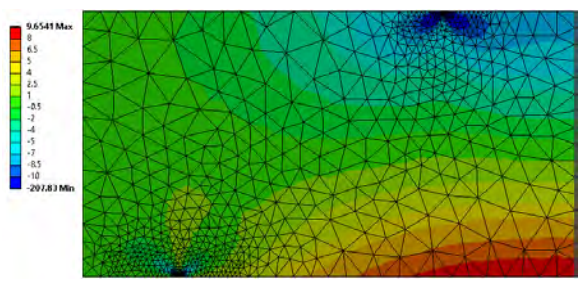

Figure 8(e): Resultant Normal Stresses for Case (3) with Roller-Roller

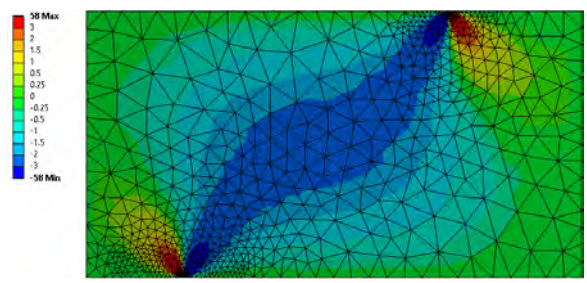

Figure 8(f): Resultant Shear Stresses for Case (3) Roller-Roller

Table 4: Resultant Stresses (MPa) and Forces (N) for Cases 1,2,3 for roller-pin end support condition

Case	Normal Stress at L/2 $\sigma_{xx,mid}$	Av. Normal Stress at h/2 $\sigma_{xx,h/2}$	Max. Shear Stress τ_{xy}	Reaction at Roller R_y	Reaction at Pin P_y	Reaction at Pin P_x	Max. frictional Stress σ_{fr}
1:R-P	9.2089	-0.30703	43.8	4121.6	4115.88	0.316	13.549
2:R-P	8.49	-0.2	45.85	3794.17	3805.55	0.2638	23.073
3:R-P	9.94	-0.2314	45.9	3935.7	3958.9	0.2345	14.263

Frictional Influences

The effect of different types of contacts was studied only on Case (1). To show the effect of friction, frictional contact with allowed penetration of the rollers in the specimen and different friction coefficients was studied. From Table 5 it can be assumed that frictional effects are visible only in case of asymmetric support conditions as on the horizontal reaction component of the pin is increased with the increase of the frictional coefficient.

Figure 9(a): Normal Stresses, Case (1), Roller-Pin

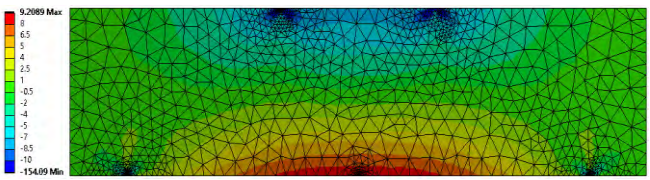

Figure 9(b): Shear Stresses, Case (1), Roller-Pin

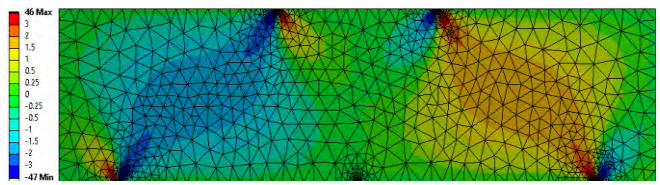

Figure 9(c): Normal Stresses, Case (2), Roller-Pin

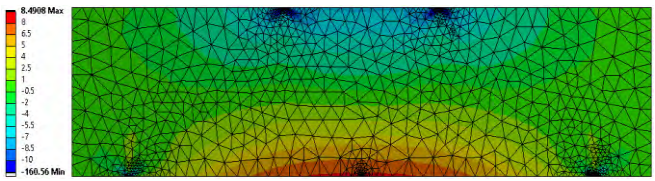

Figure 9(d): Shear Stresses, Case (2), Roller-

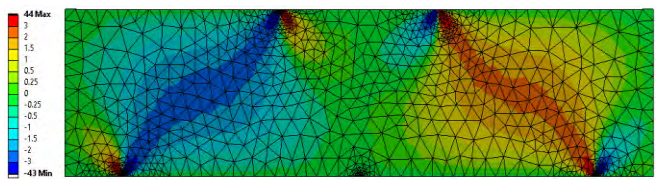

Figure 9(e): Normal Stresses, Case (3), Roller-Pin

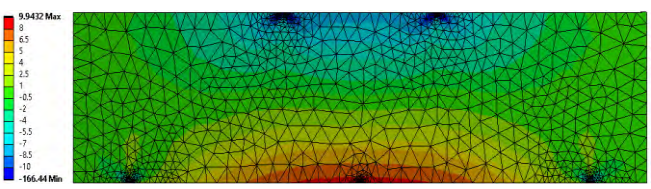

Figure 9(f): Shear Stresses, Case (3), Roller-Pin

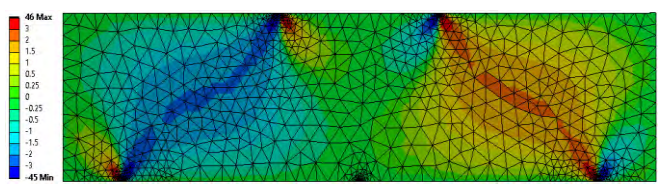

Table 5: Resultant stresses for nonlinear types of contact for Case 1

Friction Coefficient μ	Case	Normal Stress @L/2 $\sigma_{xx,mid}$	Normal Stress @h/2 $\sigma_{xx,h/2}$	Max Shear Stress $\tau_{xy,max}$	Reaction @ Roller R_y	Reaction @ Pin P_y	Reaction @ Pin P_x	Max Frictional stress σ_{fr}
∞	PR-R	9.93	-0.3196	61.924	4567.66	4568.586	2.824	61.924
1	PR-F	10.022	-0.308	50.103	4495.37	4479.667	0.5162	41.494
0.5	PR-F	10.1	-0.3069	48.892	4471.716	4466.665	0.4236	29.764

The Direct Tension Specimen

For comparison purposes one eighth of the beam was simulated in direct tension (37.5mm x37.5mm x140mm). As in the case of four-point bending tests, a wedge of dimensions 37.5mm x17.5mm x42.5mm was also simulated and a frictional contact of 0.5 and 1 was assumed to avoid premature sliding at the interface. A displacement of 0.1mm was applied on the wedge. The configuration and results in terms of stresses and strain distribution are shown in Fig. 10. The resultant stress at the midsection for μ=0.5 was 4.7MPa while the strain was 9.8617×10^{-5} mm/mm. For μ=1 the stress was 9.45MPa and the strain 1.9699×10^{-4} mm/mm. Figure 10 also illustrates the problematic nature of the test in terms of the intense stress concentrations under the area that is in contact with the steel wedge and nonuniform strain distribution along specimen's length.

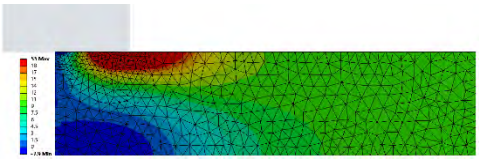

Figure 10 (a): Normal stress for μ=1.

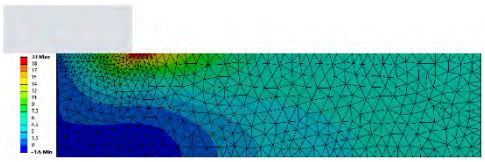

Figure 10 (b): Normal stress for μ=0.5

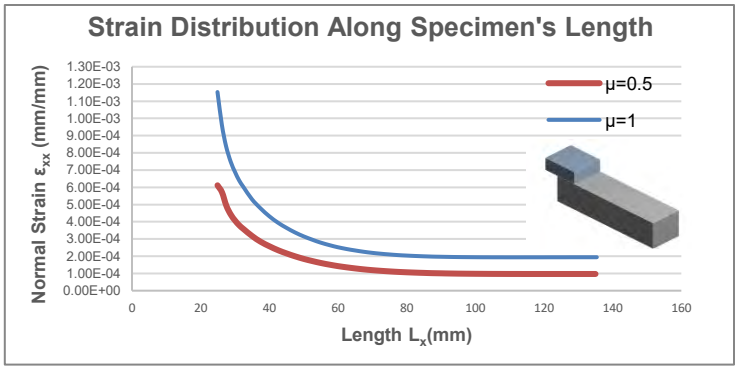

Figure 10 (c): Normal stress for μ=0.5

CONCLUSIONS

The objective of the research was to evaluate the relevance between results from UHPFRC direct tension test and flexural tests conducted as per the established relevant testing procedures. The geometrical nonlinearities induced by the experimental configuration of four-point bending test were studied through detailed finite element simulations. Parameters such as friction, roller diameter and end support conditions were investigated. Based on the results it was concluded that: (i) decrease of rollers' radius creates high stress concentration and distortion of the normal stress profile under the point of application of the load, (ii) steep diagonal strut action is developed for cases of impactor/roller diameter ratio higher than 1, (iii) Frictional influences are more visible in the asymmetric case of pin-roller and (iv) Pin-Roller end support condition creates a slightly unsymmetric model with the horizontal force reaction to depend on the generated frictional stresses. The effect is more intense in case of smaller rollers (Case 2) and (iv) The correlation between results obtained from direct tension and bending experiments is not straightforward, because the strain distribution in the direct tension case is highly nonlinear and depends also on the frictional action exerted by the grips.

REFERENCES

1. ACI 544R-17. *Report on Measuring Mechanical Properties of Hardened Fiber-Reinforced Concrete* ACI Committee 544
2. AFNOR NF EN 13670/CN (2013). Exécution des Structures en Béton – Complément National à la Norme NF EN 13670
3. Yang, Y. (2019). A Thesis Report: Tensile Behavior of Ultra- High-Performance Steel Fiber Reinforced Concrete.
4. Lopez, J. (2017). A Thesis Report: Characterization of The Tensile Behaviour of UHPFRC by Means of Four-Point Bending Tests.
5. Canadian Standards Association (2019). Annex U A23.1: Ultra-high-performance concrete (UHPC).
6. Baby, F., Graybeal, B., Marchand, P., & Toutlemonde, F. (2012). Proposed Flexural Test Method Associated Inverse Analysis for Ultra High-Performance Fiber Reinforced Concrete. *ACI Materials Journal*, 109(5), 545-556
7. Rigaud, S., Chanvillar, G., and Chen, J. (2011). Characterization of Bending and Tensile Behavior of Ultra-High-Performance Concrete Containing Glass Fibers. *6th International Symposium on High Performance Fiber Reinforce Cement Composites,* 373-380.
8. Qian, S., and Li, V. (2007). Simplified Inverse Method for Determining the Tensile Strain Capacity of Strain Hardening Cementitious Composites. *Journal of Advanced Concrete Technology*, 5(2), 235-246
9. Georgiou, A. V. and Pantazopoulou S. J. (2016). Effect of fiber length and surface characteristics on the mechanical properties of cementitious composites. *Construction and Building Materials,* 125, 1216-1228
10. Pantazopoulou, S. J., Palermo, D., Yang, Y., Eshghi, N., Saikali, R. and Chasioti, S. (2019) Technical Report: Development of Specifications for Determining the Tensile Behaviour of UHPFRC Materials for Structural Applications in Highway Bridges,
11. ANSYS ® *Academic Research Mechanical, Release 19.2, Help System, Static Structural Analysis Guide, ANSYS, Inc.*

RIB SCALE APPROACH FOR INVESTIGATING THE BOND PERFORMANCE OF REINFORCEMENT IN UHPFRC

Fabien Lagier, Ph.D., Research Associate, Polytechnique Montreal, 514-340-4711, fabien.lagier@polymtl.ca
Bruno Massicotte, Ph.D., P.E., Professor, Polytechnique Montreal, 514-340-4711, bruno.massicotte@polymtl.ca
Mahdi Ben Ftima, Ph.D, P.E., Assistant Professor, Polytechnique Montreal, 514-340-4711, mahdi.ben-ftima@polymtl.ca
Aude Rosini, M.Sc., Junior Engineer, 514-393-1000 SNC-LAVALIN, aude.rosini@snclavalin.com

INTRODUCTION

The exceptional mechanical and durability properties afforded by ultra-high performance fibre-reinforced concrete (UHPFRC) have created opportunities to significantly advance the state-of-the-art in connections for prefabricated bridge components. UHPFRC is mainly characterized by a high tensile strength (usually greater than 7 MPa) associated with a high deformation capacity of about 0.2-0.3 %. However, UHPFRC is not a single material. These tensile properties can vary widely depending on selected fiber and matrix parameters. The performance of the connections is strongly related to the performance of the materials used in the joint, but also to the load transfer mechanisms between spliced bars according to rebars details. Bond is a highly complex phenomenon, influenced by many parameters.

UHPFRC exceptional tensile characteristics make them ideal materials to improve the resisting mechanism of the concrete surrounding lapped reinforcement by efficiently counteracting the bursting pressure generated by bar ribs and consequently significantly enhancing the bond behavior and the overall performance of the connection. The simplest and most optimal configuration of splicing is to have straight bars with a constant clear spacing between the spliced bars, called noncontact lap splices (Figure 1).

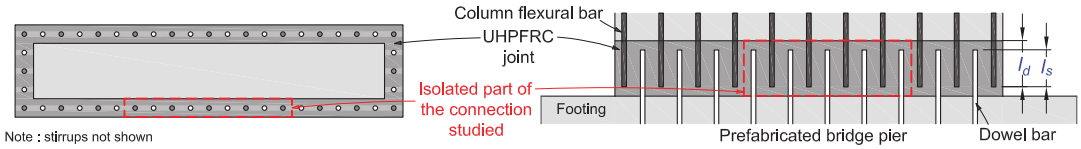

Figure 1 – Typical detail for UHPFRC with noncontact lap splice

Several studies have demonstrated that UHPFRC provide a better confinement of embedded rebar, better bond stress distribution along the spliced bar and reduce the required splice lengths. However, the mechanics of bond in UHPFRC for contact and noncontact bar splices is not well understood and current design recommendations are mainly based on limited test series for specific applications. The development of numerical tools to aid the design and optimization of grouted connections is primordial to take into consideration different practical aspects such as concrete cover, bar spacing, UHPFRC performances, stirrups, misalignment effect, etc. In situations where the bond behavior is one of the main phenomena controlling the member global response, the bond mechanism needs to be considered explicitly in numerical simulations. All these parameters increase the challenge for developing simple design approaches that integrate all of these influences from materials to lap splice configuration details.

MODELLING STRATEGY AND VALIDATIONS

In this study, a detailed 3D Nonlinear Finite Element Analysis (NLFEA) at rib-scale was developed (Figure 2a). UHPFRC behavior is modelled by concrete constitutive model EPM3D [1] used as user's subroutine VMAT in ABAQUS/Explicit. The bond phenomena at the interface between the reinforcing bar and surrounding concrete was mainly ensured numerically by a normal contact in front of each rib and, to a lesser extent, with a combined Coulomb friction and cohesive surface between each rib. Mesh size was about 3 mm for all numerical simulations. To avoid the effect of steel bar yielding on bond strength, the rebars were considered with a linear elastic behavior. Several experimental programs on direct tension pull out tests (DTP) and direct tension lap splice (DTLP) tests were performed to investigate the bond behavior of rebar embedded in UHPFRC (Figure 2b) [2, 4]. The numerical results show that the model accurately

reproduces the experimental behavior (Figure 2c) [3, 4]. Nevertheless, it revealed the importance correctly estimate the reduced tensile properties inside the connection in comparison to the material characterization.

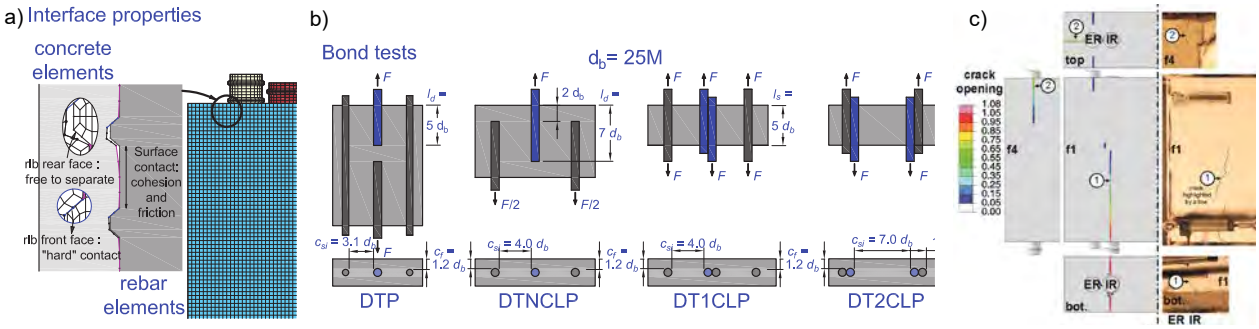

Figure 2 – Numerical strategies: (a) interaction properties at steel-concrete interface, (b) experimental programs for numerical validation, (c) crack pattern example comparison.

PARAMETRICS STUDIES

Noncontact lap splice configurations

A parametric study was conducted on 5 spliced rebars pulled from each side of the connection, taking into account the effect of lateral continuity, to study the influence of splice lengths, clear spacing between overlapping bars and UHPFRC tensile performances (Figure 3a,b). The results of these simulations showed a strong influence of UHPFRC tensile properties on the maximum bar stress at bond failure (Figure 3c). A change in the failure mode was observed when the spacing between the overlapping bars increases (Figure 3d-f), from in-plane splitting cracks to face splitting cracks with diagonal cracking initiated from the end of the rebar (Figure 3f).

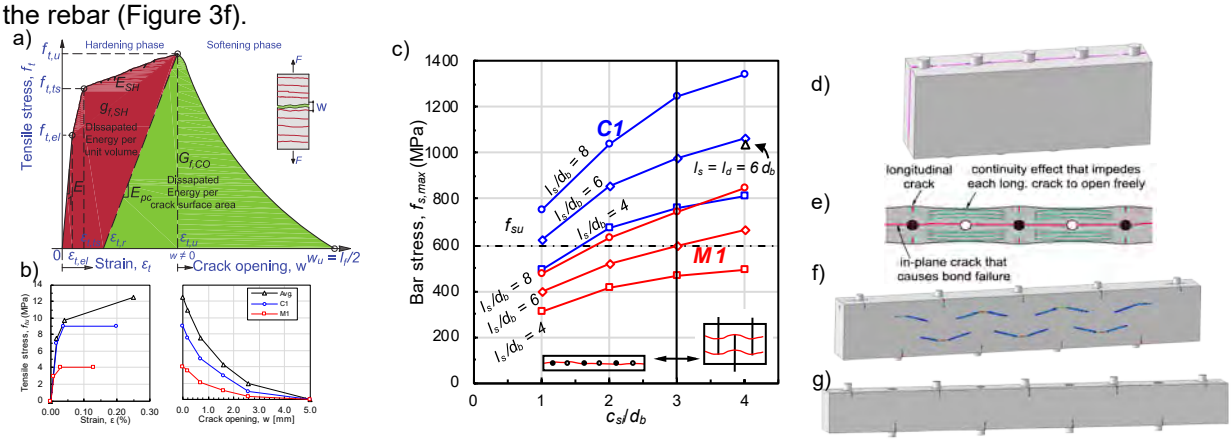

Figure 3 – Influence of noncontact lap splices: (a) Idealized modeling approach, (b) UHPFRC tensile models, (c) bar stress at bond failure versus c_{si}, d) c_{si} = 1 d_b, e) influence of the continuity on longitudinal splitting crack; (f) c_{si} = 4 d_b (g) l_s = l_d = 6 d_b and c_{si} = 4 d_b

This first observation shows that compared to what has been reported in the literature based on test specimens on which only one bar is pulled at a time, the energy required to lead to a longitudinal splitting crack failure is much higher than the one creating an in-plane splitting crack through the anchored bars in the case of noncontact lap splices. This numerical observation clearly shows the effect of continuity. Indeed, each vertical splitting crack is not free to open because their opening is mutually impeded by the material that separates each anchored bar (Figure 3e).

In addition, it has been shown numerically that the failure mode and the bond strength are different, if only one bar is pulled at a time bar versus pulling simultaneously on all rebars. This finding challenges the relevance of loading only one bar in a UHPFRC strip with noncontact lap splices.

Influence of l_s and l_d

With typical field-cast UHPFRC connections, the embedded length is always slightly longer than the splice length. A numerical simulation was done with l_s = l_d = 6 d_b, removing the discontinuity at each free end of the rebars. The maximum bar stress reached 1040 MPa with a mode of failure governed by longitudinal

splitting cracks (Figure 3g), clearly different from the failure mode observed in the presence of the discontinuity at the end of bars. Based on these preliminary results, it appears that the ultimate capacity of noncontact lap splices is mainly governed by the splice length, l_s and the UHPFRC performances, regardless of the embedded length l_d provided.

UHPFRC tensile properties

A parametric analysis was conducted to study the influence of tensile properties on bond strength. The study was conducted from modeling a DTP test where the bond failure is governed by a splitting failure along the embedded bar. Several tensile responses have been considered (Figure 4a). All specimens had face covers c_f = 1.5 d_b and l_d = 8 d_b. This numerical investigation showed that with UHPFRC the initiation of splitting cracks always occurs before the maximum bond strength is reached. Hence, the contribution of the tensile softening part of UHPFRC played a role in the maximum bond strength. The numerical results of bar stress at bond failure versus the post-cracking tensile strength of UHPFRC (Figure 4b) clearly showed that that the bond strength increases as the $f_{t,u}$ increases. But, for the same $f_{t,u}$ with 2 different tensile responses up to peak stress, a bond strength difference of 21% was noted. This difference is attributed to the increase in fracture energy between the two models (Figure 4c). This result indicates a strong correlation between the coupled properties of tensile strength and fracture energy up to peak stress with the bar stress at bond failure (Figure 4c).

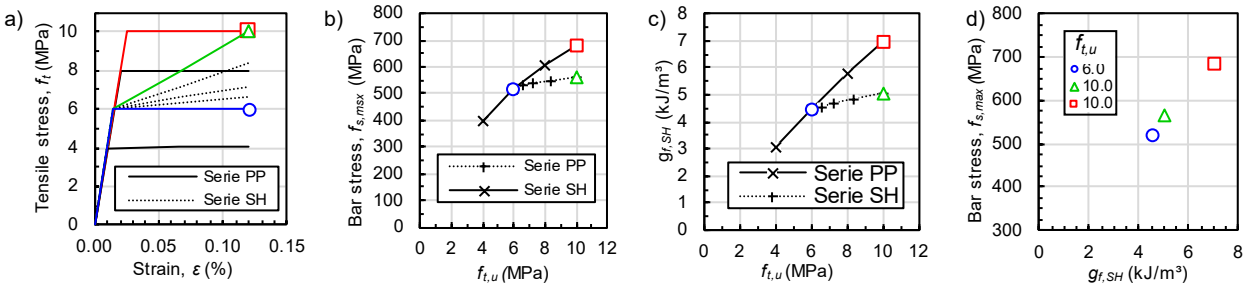

Figure 4 – Influence of tensile properties, (a) UHPFRC tensile models, (b) bar stress at bond failure, c) $g_{f,SH}$ vs $f_{t,u}$, d) effect of $g_{f,SH}$

CONCLUSIONS

The numerical methodology developed for studying bond illustrates how NLFEA using 3D simulation at rib-scale can contribute into the development of design guidelines for UHPFRC lap splice connections. This study demonstrates the significant effect of boundary conditions and applied load in testing procedure on noncontact lap splice configurations. Moreover, the numerical results highlight one of the most important challenges in UHPFRC design: the selection of an accurate estimation of the actual tensile properties in the structures in terms of strength, strain hardening and softening stage that accounts for fiber orientation and dispersion. The role played by splitting cracks in bond failure emphasizes the importance of both tensile strength and fracture energy of UHPFRC in evaluating the bond strength of UHPFRC connections.

ACKNOWLEDGEMENT

This research was funded by the Quebec Ministry of Transportation, the Natural Science and Engineering Research Council of Canada (NSERC), and the CRIB (FRQNT). The research was carried out in Polytechnique Montreal Hydro-Québec Structures Laboratory. Some materials were graciously provided by KING Materials and Bekaert.

REFERENCES

1. Massicotte, B., and Ben Ftima, M. (2015). “EPM3D-v3.4—A user supplied constitutive model for the nonlinear finite element analysis of reinforced concrete structures.” Rep. SR15-08, Polytechnique Montréal, Montreal.
2. Lagier F., Massicotte B., & Charron J.-P. (2015). Bond strength of tension lap splice specimens in UHPFRC. Construction and Building Materials, 93, 84-94
3. Lagier, F., Massicotte, B., & Charron, J. P. (2016). 3D nonlinear finite-element modeling of lap splices in UHPFRC. Journal of Structural Engineering, 142(11), 04016087.
4. Rosini, A. (2018) Design of Field-Cast UHPC Connections for Accelerated Bridge Construction in High Seismic Zones, M.A.Sc. Thesis, Polytechnique, Qc., Canada (in French).

DESIGN FIRST FLORIDA I BEAM BRIDGE WITH GRS ABUTMENT

Quanyang Yao, Ph.D., P.E., Florida DOT, (863) 519-2733, quanyang.yao@dot.state.fl.us
Andra Diggs II, P.E., Florid DOT, (863) 519-2426, andra.diggs@dot.state.fl.us
Larry Jones, P.E., Florid DOT, (850) 414-4305, larry.jones@dot.state.fl.us
Kisan Patel, P.E., Florid DOT, (863) 519-4287, Kisan.patel@dot.state.fl.us

ABSTRACT

To replace a rapid deteriorated timber bridge, the GRS-IBS abutment – one of the renovated ideas championed in 2010 by the FHWA's EDC initiative, was implemented to overcome a series of challenges developed during bridge design process. Instead of using a concrete cap supported with piling, the GRS-IBS provides a great settlement tolerant shallow foundation and approach. This paper addresses some new practices in the Florida Department of Transportation: 1) integral diaphragm for an intermedium single span bridge resulting in the elimination of traditional bearing pads; 2) the elimination of expansion joints at roadway surface; therefore, minimizing bridge life time maintenance.

INTRODUCTION

The Department of Environmental Protection's (DEP) Division of Recreation and Parks proposed to replace a timber bridge due to inadequate bridge capacity and rapid deterioration of structural elements. Although existing bridge construction plans were unavailable, additional information emerged identifying the existing bridge as a historic structure to further complicate the design. A series of challenges developed during bridge design; such as where and how to relocate the historic structure, how to protect the historic timber bridge from impact of the new construction if it is not relocated, and where the new bridge would be located to avoid overshadowing the historic structure.

One of the renovated ideas championed in 2010 by the Federal Highway Administration's (FHWA) Every Day Counts (EDC) initiative is the geosynthetic reinforced soil-integral bridge system (GRS-IBS) (1, 2). Instead of using a concrete cap supported with piling, the GRS-IBS provides a great settlement tolerant shallow foundation and approach. Because of the system's lower cost, short construction time, and smooth transition from roadway pavement to bridge, it is accepted by several State DOTs and local governments (3) for single span bridges up to 140 feet long.

Bridge Location and Some Challenges

The existing timber bridge over Zipprer Canal is an undivided two-lane road in Lake Kissimmee State Park in Polk County, Florida, USA. The existing bridge was built in 1964 utilizing timber for both the superstructure and substructure. Due to rapid deterioration of structural elements, it was closed to traffic. The original proposed bridge plans were designed to replace the existing structure with a three-span precast concrete slab bridge. Because of its unique characteristics and service age, the existing bridge was registered as a historic structure during the design process by the Federal Highway Administration (FHWA) and the State Historic Preservation Office (SHPO), and it fell under the provisions of 4(f) for protection. Because of the difficulties to relocate the historic structure, the way to protect the existing bridge and the location of new bridge presented a new challenge for the project; such as pile driving impacts on the historic bridge and the possible overshadowing of the historic bridge in the Park environment.

To avoid overshadowing the historical bridge, a series of bridge locations and several types of superstructure have been investigated. The final location of the new bridge has been established at about 44 feet east of the existing structure. Through the bridge development process, 36-inch Florida I Beams (FIB-36) spaced at 6.75 feet were selected for the bridge superstructure. Compared to pile driving, the GRS

abutment was studied and selected for the bridge foundation, which mitigated the risk of possible damage to the historic structure.

To eliminate the bump at the begin/end of bridge, the feasibility of integrating superstructure deck with 36-inch deep Florida I Beams was investigated with a grillage model. Based on FHWA GRS-IBS Abutment Design Index, a 2.5ft bearing width “b” was the minimum required for bridge beam seat. The finite element analysis indicated that a size 2.5’x4’ integral abutment would be adequate to transfer the superstructure load into its foundation. Because of the soil condition and the bridge length, a 4’x4’ integral abutment was chosen for the final bridge development and construction. The increased bearing seat area brought the service load pressure on the bearing seat under 3.5TSF. To enhance the stability and construction, an 18”x11”x8” CMU (facing block) was selected instead of the recommended ones listed on FDOT Design Index D6025. While the types of superstructure and foundation had been selected, the following project requirements determined the bridge and roadway typical section as well as hydraulic limitations.

PROJECT REQUIREMENTS

The total length of the existing bridge is about 104 feet and consists of seven approximately 15ft spans supported with timber piles. The width of existing bridge deck is 30’-0” with approximately 4 feet of shoulders at each side. The bridge has been closed to traffic due to the significant deterioration of its superstructure and substructure.

Hydraulic Requirements

Based on bridge hydraulic study and the requirement of South Florida Water Management District (SFWMD), a minimum 80ft opening under the bridge is required and will be provided. The future canal bottom at elevation of 45.29 feet (NAVD 88) will be 48ft wide with 1:2 (V:H) bank slopes on both sides at the bridge. The minimum low chord member elevation of 57.0 feet NAVD is required to meet the minimum vertical clearance.

Roadway Typical Section

Based on the traffic data, the proposed bridge cross section consists of two 11ft travel lanes and one 5’-0” wide raised sidewalk on the west side and 2’-0” shoulders on each side with 1’- 1” wide standard 32” vertical traffic barriers. The overall width of the proposed bridge is 33’-2”. The bridge deck is crowned with a cross slope of 0.02 to both sides of the bridge coping.
Following sections summarize the geotechnical investigation and the bridge selection.

GEOTECHNICAL CHALLENGE AND GRS-IBS SOLUTION

Subsurface Investigation and GRS-IBS Abutment Solution

Two 150-ft deep soil borings were taken by the Department in vicinity of the proposed bridge. The results of the borings indicated the presence of sands, sand-silt mixtures and clayey sands. Ground water elevation was recorded at about 1.0ft below the ground surface.

Steel piles (both pipe piles and H-piles) and prestressed concrete piles were investigated in the Geotechnical Report. Due to the lack of a hard layer of soil and the requirement of long shafts, the study of drilled shaft foundations was not warranted. Based on the Geotechnical Report, steel piling is a possible alternative but it is not expected to be economically viable due to the extremely aggressive environment. Precast prestressed concrete piles are considered suitable for the support of foundations at this location; however, close monitoring of the existing bridge will be required during pile driving. Based on the soil boring information, GRS abutments are feasible for this project. Because the use of the GRS abutment will eliminate pile driving and mitigate the risk of damaging the existing historic structure, the GRS bridge abutment has been further evaluated and selected for the single span bridge alternatives.

Constructability

With deep foundations, all the alternatives studied can be designed and constructed in a single phase. Because of the concern of differential settlement, a multi-span bridge option on GRS piers was not investigated. Due to the close distance between the new bridge and the existing historic bridge, eliminating pile driving activity and its impact on the existing bridge was preferred. Otherwise, close monitoring of the existing bridge during pile installation would be required because of its qualification as an FHWA historic structure. Preforming of pile holes would be needed at this location to reduce the pile driving vibrations. Long piles requiring multiple splices may be required because of the limitation of access.

Compared to the multi-span bridge alternatives, single span bridges could take advantage of GRS-IBS application, which not only resulted in lower construction cost but also minimized the construction impact on the historic bridge. Due to required bridge length, further route analysis was conducted to confirm beam delivery would be possible.

BRIDGE SELECTION

The key factors that influenced the Cow Camp Road bridge alternative evaluation and selection were the construction cost, and the risk mitigations associated with pile driving adjacent to the existing historic structure. Constructability, accessibility, construction time, maintainability, durability, and aesthetics were also considered in the selection of the most desirable bridge alternative for this project. It was established that span arrangement and the risk mitigation associated with the bridge construction were critical in controlling the overall cost and success of the project. To meet the minimum requirements of SFWMD for its ultimate canal widening and to mitigate the risk of pile driving impacts, three-span structures with span arrangement of 30’-30’-30’ was studied and dropped out, and only single span bridges were selected for further investigation.

Because of the adjacent historic bridge, single span Florida I beams (FIB-36), steel girders and prefabricated steel truss with GRS abutments were considered in the BDR study. As a result, the GRS bridge abutment with FIB-36 was selected in the final recommendation. To accommodate the beam seats of GRS abutments and based on soil information, the final bridge length for single span options was set at 91’-4”, which brought the bearing pressure under 7,000psf on reinforced soil bearing for each beam. Based on the BDR recommendation, a single span bridge with prestressed concrete FIB-36 was implemented in final design for this project.

BRIDGE SUPERSTRUCTURE DESIGN AND INTEGRAL ABUTMENT ANALYSES

Bridge Design and Superstructure Load (4)

Smart Bridge Suite has been used in beam design and load rating. Based on the output, the maximum load at beam end bearing is 254.06kips factored load and the 169.49kips service load. See the table below.

Reactions at the start and end of each girder are summarized in the following tables.

DesignVehicle	Girder 1		Girder 2		Girder 3	
	Start	End	Start	End	Start	End
Factor dead load reaction(kips)	106.87	106.87	110.23	110.23	110.23	110.23
Factor live load reaction(kips)	132.21	132.21	143.83	143.83	143.83	143.83
Factor total reaction(kips)	239.08	239.08	254.06	254.06	254.06	254.06
Serviced dead load reaction(kips)	84.79	84.79	87.30	87.30	87.30	87.30
Serviced live load reaction(kips)	75.55	75.55	82.19	82.19	82.19	82.19
Serviced total reaction(kips)	160.34	160.34	169.49	169.49	169.49	169.49

DesignVehicle	Girder 4		Girder 5		-	
	Start	End	Start	End	-	
Factor dead load reaction(kips)	110.23	110.23	106.87	106.87		
Factor live load reaction(kips)	143.83	143.83	132.21	132.21		
Factor total reaction(kips)	254.06	254.06	239.08	239.08		
Serviced dead load reaction(kips)	87.30	87.30	84.79	84.79		
Serviced live load reaction(kips)	82.19	82.19	75.55	75.55		
Serviced total reaction(kips)	169.49	169.49	160.34	160.34		

Beam layout and strand pattern as well as beam concrete are shown in the following.

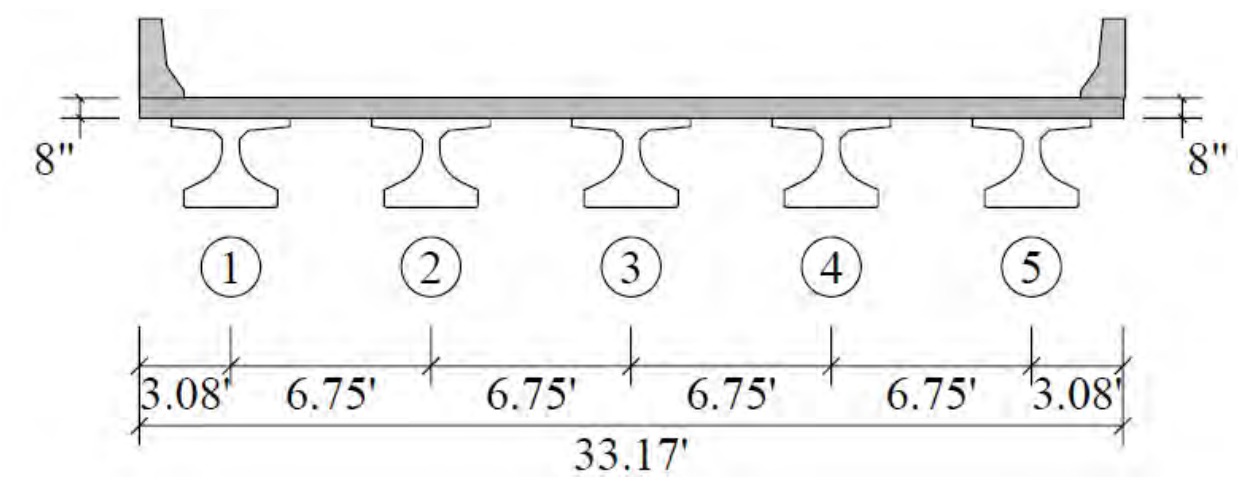

F.I.B.-36:

Strand ●
Debonded(ft) ▲ 19 ★ 22 ■ 26 ✦ 5 ◆ 10

Y In.	No.Of Strands
3	17
5	17
7	5

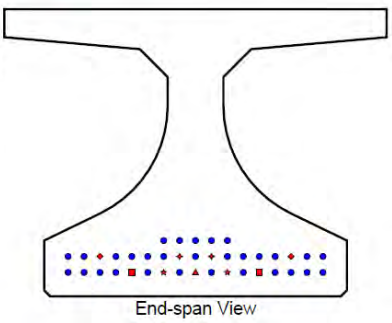

End-span View

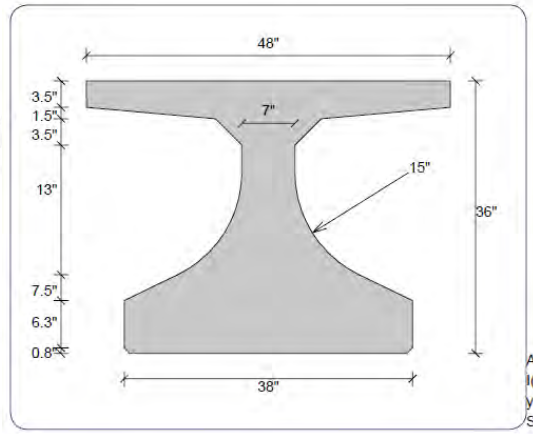

Area(in^2) = 807.103
I(in^4) = 127553.03
yb(in) = 16.49
Sb(in^3) = 7735.321

Concrete:

	For Prestressed Concrete Application			
	At transfer		At service	
Concrete 8.5	fci'	6.00 ksi	Allow. tension (inv)	0.55 ksi
	Eci	4506.27 ksi	Allow. tension (opt)	0.69 ksi
	Allow. comp	3.32 ksi	Allow. comp. (permanent load)	3.83 ksi
	Allow. tension (Center 70%)	0.45 ksi	Allow. comp. (0.5 permanent +LL)	3.40 ksi
	Allow. tension (Outer 15%)	0.89 ksi	Allow. comp. (permanent +LL)	5.10 ksi

Bearing to Bearing (ft)	87.33	Precast Length (ft)	89.00
Haunch Thickness (in)	0.50	Concrete Age at Transfer (days) *	1.00
Concrete Age at Deck Placement (days) *	120.00	Concrete Age at Final Stage (days) *	20000.00
Friction Factor U *	0.60	Cohesion Factor C (ksi) *	0.08
K1 *	0.20	K2 (ksi) *	0.80
Min Dist.Between Longitudinal Reinforcement (in)	2.00	Min Side Cover Depth of Longitudinal Reinforcement (in)	2.00
Min Bottom Cover Depth of Longitudinal Reinforcement (in)	2.00	End Cover Depth of Shear Reinforcement (in)	2.00

*: For LRFD only

Integral Diaphragm Analyses

Based on AASHTO GRS Design Guidelines and bridge superstructure design outputs, the preliminary dimensions of the integral diaphragm were decided to be: 4' (W) x 4'(D) x 33'-2" (L) cast-in-place concrete. A grillage model was used in checking the integral diaphragm. See Figure 1 for the finite element model.

Phase Bearing Analyses

For the bearing stress before casting concrete, the analysis is based on AASHTO 5.6.5 – Bearing (4)

$P_r = FP_n$

$P_n = 0.85f'_c A_1 * m$

Per AASHTO 5.5.4.2 for shear and torsion in reinforced concrete section of normal weight concrete, take F= 0.9

Use m = 1.0 to be conservative in the capacity calculation, which results in P_r = 1652kips (>> P_u = 47kips).

The bearing stress checks after casting diaphragm are not required because the integral diaphragm is sitting on the GRS abutment where soil bearing capacity is required to be checked.

The Developmental Design Standards (Index D6025 GRS-IBS) (5, 6) limits the maximum service load on bearing to 2.0 TSF which is lower than the calculated bearing pressure in the beam end. To increase the

bearing capacity in the beam seat, woven geotextile with minimum strength of 4800 lb/ft (both machine and cross directions) and size No. 57 stone aggregate were specified for the GRS backfill after geotechnical analyses.

Bridge Expansion Concern

For 91'-4" single span, two expansion joints located at bridge ends designed to accommodate the total extension due to temperature change ranging from 35 degrees to 105 degrees were evaluated. The expected total expansion/contraction based on calculation is approximate 0.460 inches which is not significant enough to cause cracks at the interface between integral abutment and roadway approach. Therefore, expansion joints were not included in the final plans. For a detailed discussion of the concern of possible cracking at the roadway surface due to beam expansion/contraction, see the Section 6.3 of Publication No. FHWA-HRT-11-026, June 2012 (1).

DETAILING PLANS AND CONSTRUCTION

Per the FDOT Plans and Preparation Manual (7), figures 2 through 5 present some detailing plans of the GRS-IBS bridge abutment for the Cow Camp Road bridge. Picture No. 1 presents the GRS-IBS bridge abutment construction and challenges. Picture No. 2 shows the erected beams and integral diaphragm reinforcement. Finally, Picture No. 3 is the completed bridge.

ACKNOWLEDGEMENTS

The authors would like to recognize Mr. Gerard Moliere, P.E. for his great support during the GRS abutment design. The authors also are very grateful to the seamless team work of co-workers for their contribution in reviewing the design and detailing. We are thankful to Denson Construction for their time and patience during field visits and inspections.

REFERENCES

1. *Geosynthetic Reinforced Soil Integrated Bridge System Interim Implementation Guide.* Publication *No. FHWA-HRT-11-026, June 2012.*
2. *Geosynthetic Reinforced Soil Integrated Bridge System, Synthesis Report*. Report No. FHWA-*HRT-11-027, January 2011.*
3. *Stephanie Johnston, "Dodge City's CTH KW and CTH S Bridge Replacement Project."*
   Public Works, October 11, 2017.
4. *American Association of State Highway and Transportation Officials (AASHTO) LRFD Bridge Design Specifications, Seventh Edition (2014).*
5. *Florida Department of Transportation, Structures Manual, LRFD, January 2016.*
6. *Florida Department of Transportation Standard Specifications for Road and Bridge Construction (2016 Edition) and Supplements Thereto.*
7. *Florida Department of Transportation, Design Criteria and Process, Plans Preparation Manual, January 2016.*

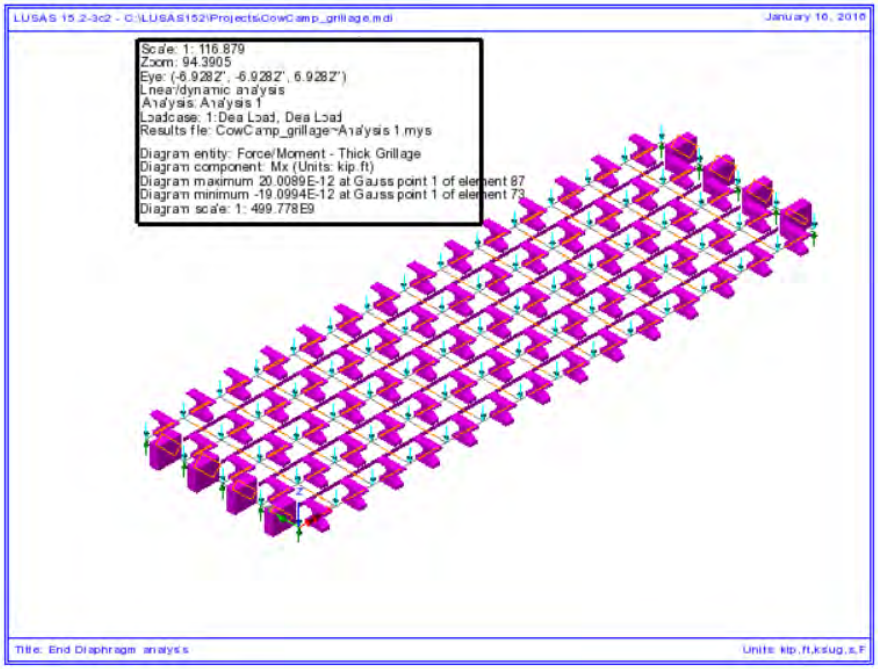

Figure 1 Grillage Model

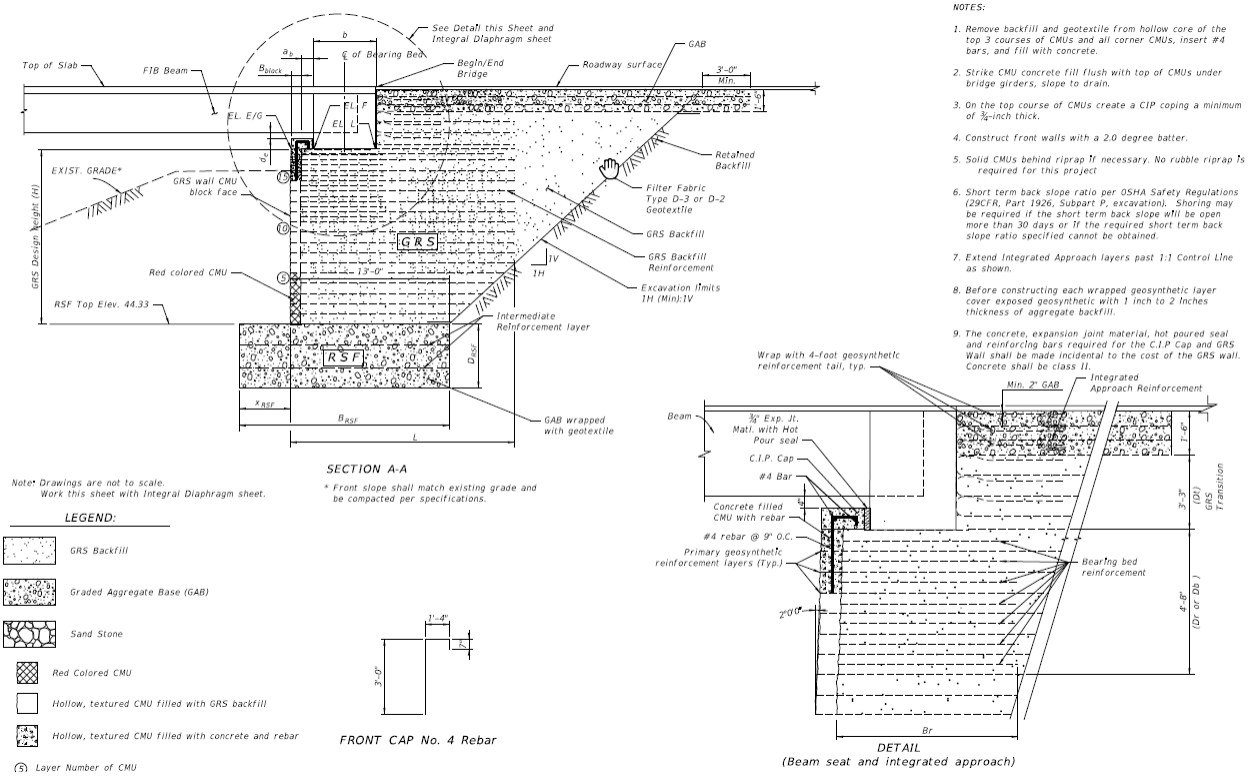

Figure 2 – GRS Abutment Details

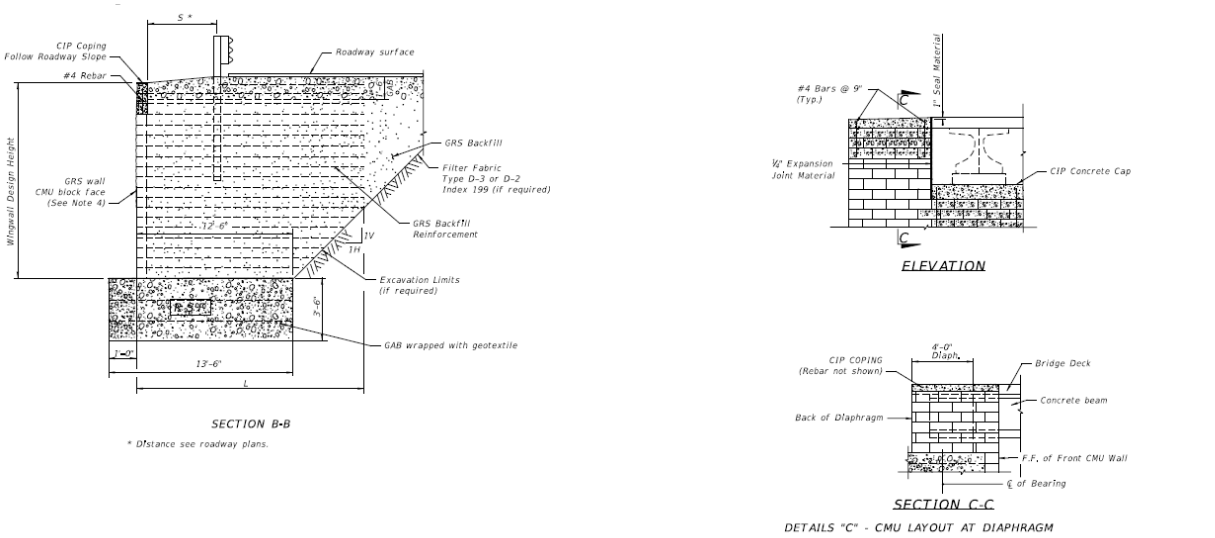

Figure 3 – Abutment Details

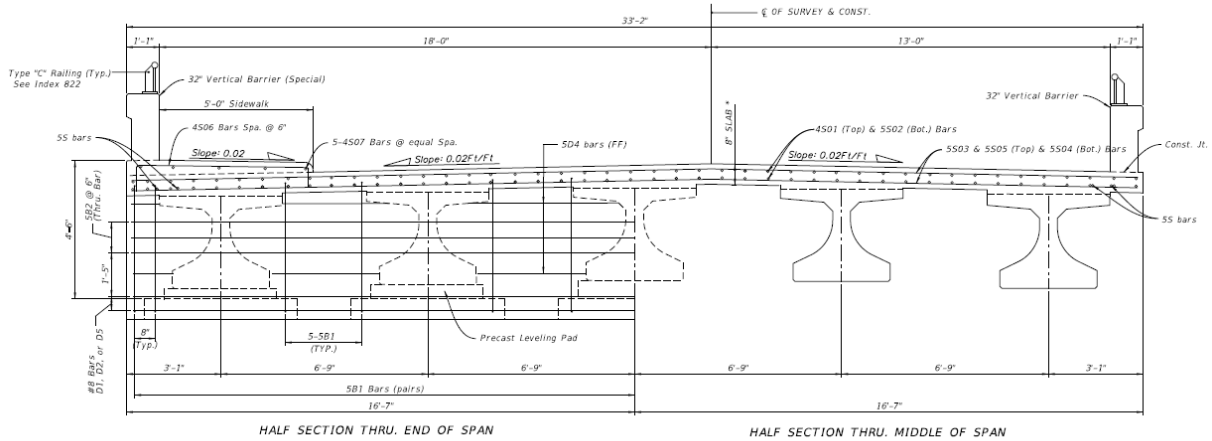

Notes:
1. For reinforcement at span ends see Integral Diaphragm Details.
2. Top 5B2 rebars shall be field bent as necessary to meet slope.
3. Rebars 5D3 & 8D1 in leveling pad not shown for clarity. For details see Integral Diaphragm Details sheets.
4. See Roadway Plans for raised sidewalk transition details.

* A minimum 2" cover shall be provided for top steel and bottom steel at deck.

Figure 4 - Bridge Section

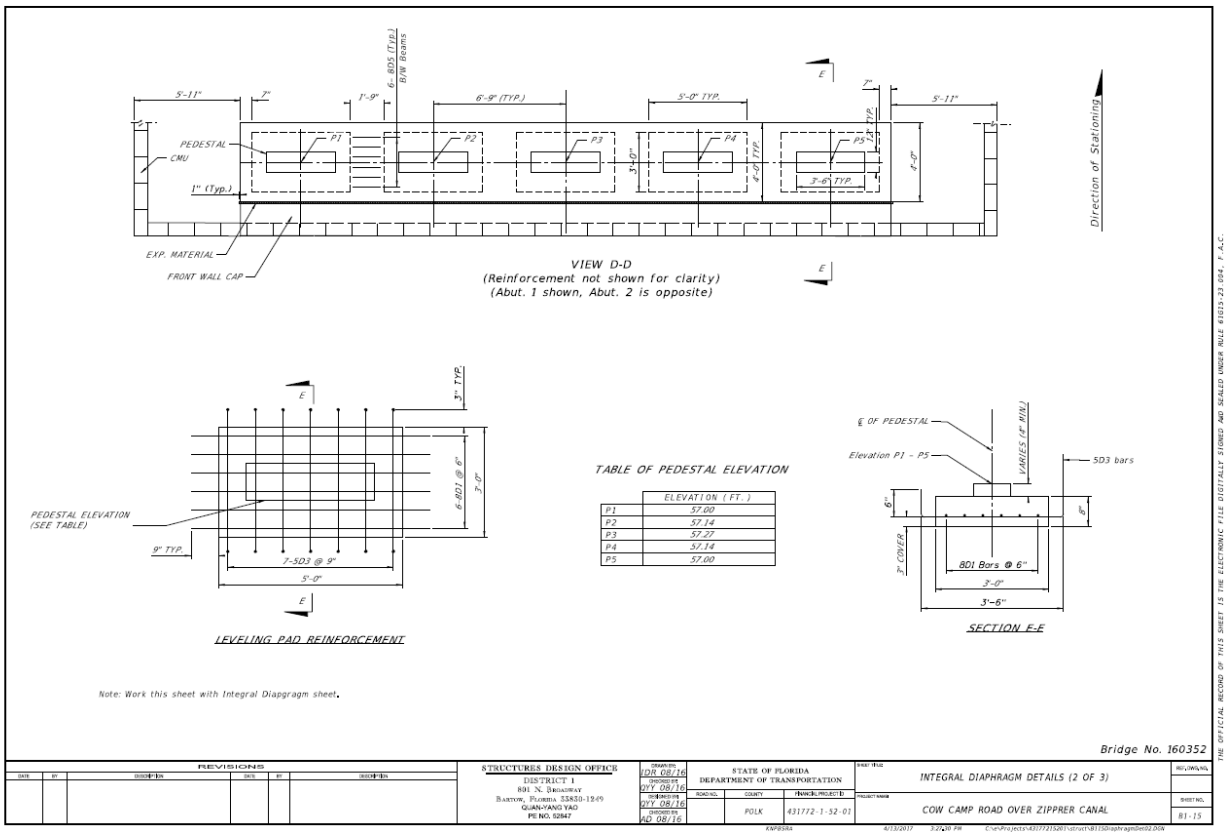

Figure 5 – Bearing Details

Picture No. 1 - GRS Abutment Construction and Challenge

Picture No. 2 - Erected Beam and Integral Diaphragm Reinforcement

Picture No. 3 - Finished Bridge

ENVIRONMENTAL AND SUSTAINABILITY BENEFITS OF SUBSTRUCTURE RE-USE PROJECTS

David Whitmore, P.Eng, FACI, FICRI, FCSE, NACE CP4, Vector Corrosion Technologies, (204)489-9611, davidw@vector-corrosion.com

ABSTRACT

Accelerated Bridge Replacement projects where existing substructures components are re-used can reduce direct cost, shorten the time required for construction and reduce traffic congestion compared to traditional bridge replacement projects.

Substructure re-use can also provide quantifiable environmental benefits including; reduction in the use of materials, reduction in environmental emissions, reduction in generation of demolition waste and the resulting need for landfill, and the protection of sensitive habitat and existing ecosystems.

As a result of these direct and indirect benefits, substructure re-use is a sustainable practice and should be encouraged.

DISCUSSION

On most inland bridges in North America the deck/superstructure has the most severe exposure to the environment, traffic loading and de-icing chemicals. As a result, the deck will deteriorate and will typically have a shorter service life than other bridge elements, such as the reinforced concrete substructure and foundations. When the deck/superstructure needs to be replaced, the substructure is usually less damaged and still has significant service life remaining.

Figure 1: Replacement Bridge Deck/Superstructure

In order to realize the full benefit of Accelerated Bridge Replacement (ABR), serious consideration must be given to the existing substructure and whether it can be used for the new structure. If substructure

components are to be reused, consideration must be given to structural capacity, existing condition, as well as the service life of the existing substructure. The options available to repair and/or extend the service life of the substructure to meet the service life objectives of the project may need to be considered. In many cases, the full benefit of ABR can be best achieved if the existing substructure can be re-used, rehabilitated or otherwise modified to remain in service for the service life of the new bridge deck or superstructure.

As shown below, in-situ testing of the existing bridge substructure is required to determine the existing condition, the extent of damage and the severity of corrosion activity. This information is used to determine what is required to achieve the desired service life.

Figure 2: In-Situ Testing of Substructure

In order to ensure a successful ABR project it is critical to do a comprehensive investigation and evaluation of the bridge. The investigation shall include adequate field testing to determine the existing condition, of bridge elements which may remain in use.

Field Investigation & Testing of existing substructures usually consists of the following procedures:

- Visual Inspection
- Delamination Survey
- Chloride Sampling and Analysis
- Concrete Cover Survey
- Electrical Continuity of Reinforcing
- pH Testing (Carbonation), and
- Corrosion Potential/Corrosion Rate Measurements

Note: Based on the findings of the investigation a Service Life Analysis can be performed to help determine the best rehabilitation methods to apply to reinforced concrete elements which will remain after the deck/superstructure is replaced.

During ABR construction the new deck/superstructure may be built off-site or compositely placed on-site in a reduced timeframe. This reduces the time the bridge is out of service or in a reduced capacity. Substructure elements can typically be rehabilitated while the bridge is in operation with limited impact on the public.

In order to realize the full benefits of ABR, consideration must be given how to best rehabilitate and effectively extend the service life of remaining substructures. In most cases these substructures have been contaminated with chloride ions and may be exhibiting concrete damage in the form of cracking, delamination, and spalling. The FHWA Bridge Preservation Guide; Publication Number: FHWA-HIF-18-022 Published Date: Spring 2018 is a great resource for how to best rehabilitate bridge. It also provides useful information regarding corrosion protection systems which have been successfully implemented throughout North America. Some options provided in the FHWA Preservation Guide are illustrated in the project examples discussed below.

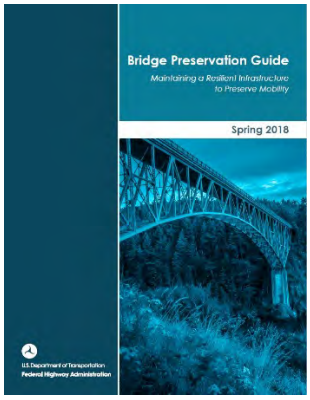

Figure 3: FHHWA Bridge Preservation Guide

In order to select the best rehabilitation option, a determination as to whether the substructure needs localized or more widespread repair is required. Once we know the physical condition of the substructure, we can develop a rehabilitation strategy and determine if it is a suitable candidate for substructure re-use. Considerations include:

- Does substructure re-use have a beneficial impact on the community, such as providing a shorter construction period.
- Will the rehabilitated substructure hold up as long as required?
- Is it cost-effective to re-use the substructure?
- Is it environmentally and socially acceptable?

When feasible, it is often desirable to reuse bridge elements. This is advantageous because the cost and time required to replace the existing substructure makes it more difficult to meet the desired ABR timeframe and budget. As mentioned above, the substructure is normally in better condition than the deck/superstructure. In order to provide the desired service life, it is important to repair existing concrete damage and to provide corrosion mitigation to achieve the desired service life of the substructure if the substructure is chloride contaminated or corroding.

SUSTAINABILITY AND ENVIRONMENTAL IMPACT

Concrete is the most widely used man-made product in the world with approximately 6 Billion tons produced annually. It is also a huge consumer of raw materials, such as cement, aggregate, admixtures, and reinforcing steel. Concrete production and steel production are both energy intensive. Despite the environmental impact, concrete is one of the most environmentally friendly materials available if it is built to last and is maintained in service for many years.

Compared to construction of new substructures, substructure re-use provides numerous environmental benefits. For instance, production of cement for new construction results in significant generation of CO_2, Carbon Monoxide, Nitrogen Oxides, Sulfur Dioxide, and Volatile Organic Compounds: (VOC's). While not usually considered, cement generates thermal pollution, which can also represent a significant environmental concern. Building more durable substructures and re-using existing substructures reduces our environmental footprint. Re-using substructures may also fast-track projects and reduce impact on fish and water ways since the need to construct new substructures is eliminated.

PROJECT CASE HISTORIES

Project 1: Island Park Bridge – MTO 417

The Island Park Bridge in Ottawa, Ontario, Canada was experiencing advanced corrosion deterioration as the result of long-term exposure to chlorides (Figure 4). As a result, it was decided that replacement of the superstructures was required. However, even though the abutments had significant damage it was decided that they could be rehabilitated through the use of galvanic cathodic protection (GCP). In order to mitigate disruption to traffic on this major route, an ABR solution was selected. The substructures were rehabilitated and protected by installing a distributed galvanic anode system which was cast into a new concrete overbuild.

Damaged concrete was removed along with any compromised reinforcing bars. Dowels were then installed into the face of the existing walls and new reinforcing steel with a distributed galvanic protection system was installed prior to placing the new concrete overbuild (Figure 5).

Once the repairs to the substructures were completed the superstructures were removed and replaced in 16 hours. The new superstructures were constructed in an adjoining lot and then moved into place in two large pieces (Figure 6). The road was closed at 8pm on Saturday evening and the old superstructures were removed. Once the old superstructures were removed the new superstructures were transported and set into place. The bridges were reopened on Sunday morning, just before noon. This solution provided the Ontario Ministry of Transportation with two new bridges on rehabilitated substructures which will provide a long, maintenance free service life.

Figure 4: Original Condition of Island Park Bridge

Figure 5: Removal of Damaged Concrete and Placement of Galvanic Anodes and Reinforcement

Figure 6: Placement of New Superstructure and Finished Project

Project 2: I-480, Omaha, NE

This bridge had its deck replaced. In-situ testing of the piers was completed and it was determined they were reusable. To extend the life of the existing piers to better match the expected life of the new deck, an electro-chemical treatment (Electrochemical Chloride Extraction [ECE]) was performed. ECE extracted chlorides out of the concrete cover of the piers and left the reinforcing steel in a passive, non-corroding condition. The before, during, and after photos are shown in Figure 7 below.

Figure 7: Before, During and After ECE Treatment of Piers

This project extended the service life of the piers by 25 years and kept 6,700 yd^3 of existing concrete in service. This reduced CO^2 emissions by an estimated 3,350 tons, equivalent to the annual emissions of approximately 670 people.

Project 3: Vine Street Expressway, Philadelphia, PA

The Vine Street Expressway is a Pennsylvania Department of Transportation (PennDOT) corridor through downtown Philadelphia (Figure 8). This project included ABR of seven superstructures and rehabilitation of the existing chloride contaminated reinforced concrete abutments.

Field testing (Figure 9) consisting of a delamination survey, corrosion potential testing, collection of cores for chloride analysis, and pH testing was conducted to determine the condition of the existing abutments. This information was used to determine and evaluate possible repair alternatives. ECE was determine to be the most appropriate and efficient method to rehabilitate and provide a 25-year service life extension to the abutments.

Concrete damage was repaired prior to installing the ECE process on the abutments. The Vine Street Expressway and the supported cross streets remained in operation while the ECE process was completed (Figure 10). All work in the substructures was conducted with minimal impact to the community.

Figure 8: 18th St. Bridge Along the Vine St. Expressway

Figure 9: Field Evaluation of Vine St. Expressway Structures

Figure 10: Rehabilitation Progressing on the Vine St. Expressway Structures

PROJECT 4: I-95 Corridor, Richmond, VA

Eleven bridges along the I-95 corridor through downtown Richmond, VA had their superstructures replaced with precast reinforced concrete decks and steel beams using ABR.

Prior to the rehabilitation design a condition assessment was conducted of all eleven bridges and based on the extent of identified damage and service life considerations the substructures received either ECE treatment or a thermally applied metalized coating (Figure 11, Figure 12, and Figure 13).

The ECE Process takes up to six to eight weeks to remove enough chlorides and passivate the substructure. After completion of the ECE process the substructure can be further protected by applying a breathable barrier system, such as a sealer or breathable coating to minimize future penetration of chloride ions into the substructure.

Figure 11: Installation of ECE System

Figure 12: ECE In Operation and Completed Structure

Figure 13: Metalizing of Substructure

Surface applied metalizing GCP involves the application of a layer of a galvanic metal such as zinc to the exterior surface of the substructure. The zinc sacrificially corrodes in order to protect the embedded steel reinforcement from corrosion activity. The metalizing will typically provide about 15 to 20 years of extended service life and can be reapplied in the future for a further extension of service life.

CONCLUSION

Many ABR projects benefit when the existing substructure is re-used. In most situations the substructure can be rehabilitated and the service life of the substructure can be extended to meet the needs of the new superstructure.

Substructure rehabilitation most often requires incorporation of electro-chemical corrosion protection systems, such as Galvanic Corrosion Protection (GCP), Impressed Current Cathodic Protection (ICCP) and Electrochemical Treatments (ECT). These methods can significantly extend the service life of a substructure and reduce future maintenance costs. Extending the service life of the substructure to match the service life of the new superstructure is a major consideration and provides significant benefits, including cost savings for the owner, reduced traffic delays for the travelling public and environmental benefits for society as a whole.

SPUN PIPE PILES – A TIME SAVING ALTERNATIVE TO MICROPILES

Theresa McAuliffe, PE, McFarland Johnson, Inc., 207-417-4037, tmcauliffe@mjinc.com
Thomas Kendrick, PE, McFarland Johnson, Inc., 207-869-5419, tkendrick@mjinc.com

INTRODUCTION

The Maine Department of Transportation (MaineDOT) successfully replaced the Weskeag River Bridge utilizing Accelerated Bridge Construction methods while keeping costs on par with conventional construction methods. The main challenge for the project was finding a foundation type that was suitable to both the site constraints and roadway closure window, as well as offering reduced risk. This project was only the second use of spun pipe piles by the MaineDOT. The author will discuss how spun pipe piles retain many of the advantages of micropiles, how they were the best solution for the shallow bedrock conditions and underground obstructions, how they are compatible with integral and semi-integral abutments, and how their use played into the success of the project.

BACKGROUND

Located on a tidal causeway, the existing Weskeag River Bridge was a 1930's vintage two-span reinforced concrete bridge in poor condition and in need of replacement. The existing bridge was replaced by a 95-ft long single span utilizing a Northeast Decked Bulb Tee (NEDBT) superstructure in combination with pile-supported semi-integral abutments located behind the existing stone masonry abutments. Precast decked bulb-tees, a first-time usage in Maine, were paired with contractor self-performed precasting of the substructure units, and a spun pipe pile foundation.

SITE CHALLENGES

The project had many site related challenges and only a 35-day closure to accomplish all demolition and construction of the full bridge replacement. The bridge is located on a causeway across the Weskeag River which undergoes tidal fluctuations exceeding 10-feet. In addition, there was a high likelihood that underground obstructions would be encountered due to the use of stone in the original causeway and bridge construction. The new bridge foundations were built behind and in close proximity to the existing granite block abutments which were to be retained, with the addition of vertical rock dowels, for earth retention and scour mitigation. As such, one of the design considerations was prevention of the new foundations from exerting lateral loads onto the existing abutments. Even though the existing abutments were built on bedrock, the bedrock elevation was too deep to excavate for new footing construction while also staying out of the water. The elevation of the bedrock was also too shallow for a typical driven pile foundation to achieve fixity for a jointless bridge solution. The selection of the foundation type played an integral role in the success of the project but required an unconventional solution due to these site challenges.

Figure 1 – Site Challenges at the Existing Bridge

FOUNDATION TYPE SELECTION

Constructability and accelerated construction were at the forefront of all design decisions and one key element was a foundation system that could accommodate the site conditions noted previously. The foundation needed to limit disturbance to the existing abutments, be constructed out of the water, and adaptable to shallow bedrock. There are many significant advantages to drilled foundations over driven piles such as eliminating risk associated with obstructions and causing less vibrations to nearby buildings or structures. Of the drilled foundation types, micropiles offer additional advantages such as compact equipment size and low headroom requirements.

A spun pipe pile leverages all these advantages by using the same materials and equipment as a micropile but eliminates the major disadvantage; time consuming and costly testing. This is accomplished in how capacity is achieved.

Figure 2 - Drilling of Spun Pipe Piles at Near Abutment while Precast Abutment Pieces Placed at Far Side

Figure 3 - Drilling Piles while staying out of the water

SPUN PIPE PILES

A spun pipe pile is essentially an end-bearing variation of a traditional micropile without the central steel reinforcement (*Figure 4*). Spun pipe piles are high strength (80 ksi) steel threaded pipe sections that are drilled and socketed into bedrock and filled with grout. The spun pipe pile gains axial compressive resistance through end bearing on the bedrock surface at the bottom of the casing, which requires that the casing be filled with grout to provide end bearing resistance over the entire tip area. The steel casing is the structural pile. In contrast, for a traditional micropile, the steel casings are drilled to bedrock to facilitate a second stage of drilling into bedrock and subsequently placing a central reinforcing bar and grout. A micropile achieves capacity through side friction along the bond length in the bedrock. To confirm adequate geotechnical resistance, micropiles undergo load testing which adds multiple days, and sometimes weeks, to the project schedule.

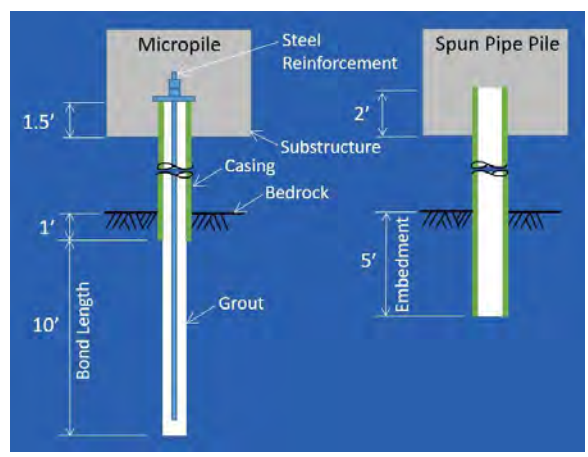

Figure 4 - Comparison of Micropiles and Spun Pipe Piles

Design Considerations

The geotechnical design of spun pipe piles considers the development of axial geotechnical resistance through end bearing on bedrock in accordance with the methodology for drilled shaft tip resistance on rock and the selection of an appropriate resistance factor.

For design, the structural capacity is based on the steel section alone, however, the pile stiffness considers the steel composite with the grout. Additionally, the design details specify the minimum depth to the first threaded splice to avoid a splice in the region of maximum bending stresses.

Figure 5 - Threaded N80 Casing in 5-ft Lengths

Construction Considerations

Spun pipe piles are installed using the same methods used to install permanent micropile casing socketed into bedrock with the use of an internal bit. Each spun pipe pile tip is fitted with a sacrificial ring bit to facilitate

the advancement of the pile into bedrock and to keep the bottom of the spun pipe pile and down-hole hammer locked at the same elevation. The pile and inner rods are advanced with the duplex drilling method with internal flush.

At the completion of drilling, the bedrock socket is thoroughly cleaned. The drilled holes are tremie grouted from the bottom of the bedrock socket up. Since load testing is not performed, a geotechnical engineer is onsite throughout the installation of the spun pipe piles. The geotechnical engineer observes and assess the following portions of the installation: depth to top of bedrock, embedment in the bedrock, the cleanliness of the bedrock socket, the length of pile installed, and grout volumes.

TIME-SAVING MEASURES

Multiple measures were taken on the project to reduce risk, namely in the selection of the foundation type. Encountering obstructions and performing load testing are two items that add significant risk to an ABC project during the bridge closure window. The ability to drill through obstructions, the reduction of drilling into bedrock (to develop side friction as in a traditional micropile), and the elimination of load testing through appropriate design methodologies, makes spun pipe piles an ideal candidate for ABC projects. Additionally, the number of pieces of equipment mobilized was minimized. For example, one piece of equipment was used to drill the spun pipe piles and socket them into bedrock as contrasted with drilled and socketed H-piles which typically require separate equipment to place the pile after drilling the hole with casing.

The contract specified a 35-day bridge closure. Despite a severe windstorm that caused extended power outages, the Contractor reopened the bridge after only 33 days. The installation of the twelve spun pipe piles (a total of 202 feet of drilled pile) was accomplished in 4-days working double shifts (96 hours total).

Figure 6 - Completed Bridge after 33-day Closure

CONCLUSION

Spun pipe piles are a time-saving and cost-effective foundation solution for full bridge replacements with challenging site constraints. By keeping constructability at the forefront of all design decisions and in the development of streamlining details, construction was simplified during the closure window.

One key element was a foundation system that could accommodate a jointless superstructure and the constraints of the site, including underground obstructions and relatively shallow bedrock. The drilling equipment also allowed the Contractor to stay out of the water, a significant advantage with a 10-ft daily change in water elevations from the tidal river. Unlike micropiles, spun pipe piles rely on end-bearing, negating the need for verification and proof load testing, saving critical time during the bridge closure. The project was the second use of spun pipe piles by the MaineDOT and resulted in a cost-effective foundation system compatible with ABC technologies with greatly reduced impacts to the local community, the environment and the traveling public.

ACKNOWLEDGEMENTS

The following participants and their roles on the project are thankfully acknowledged: MaineDOT (PM, Client/Owner), McFarland Johnson, Inc. (Engineer of Record), MaineDOT (L. Krusinski, Geotechnical), Reed & Reed (General Contractor), and Maine Drilling & Blasting (Subcontractor).

Findings and opinions expressed herein are those of the authors alone and do not necessarily reflect those of the other participants.

RAPID REPLACEMENT OF COUNTY BRIDGES UTILIZING HIGH-STRENGTH CORROSION-RESISTANT STEEL

Amgad Girgis, Ph.D., P.E., e.Construct LLC, USA, (402)312-8172, amgad.girgis@econstruct.us
Micheal Asaad, Ph.D., P.E., e.Construct LLC, USA, (402)319-5411, masaad@econstruct.us
Maher Tadros, Ph.D., P.E., e.Construct LLC, USA, (402)215-1430, maher.tadros@econstruct.us

INTRODUCTION

Many of the US county bridges are in a state of functional obsolescence and structural deficiency. Repair is not an attractive option in terms of speed and cost-effectiveness for most of these small bridges. Yet, counties need to have these bridges replaced as quickly and cost-effectively as possible.

This paper presents a new concrete bridge system and a method for rapid replacement of short span county bridges. An example is given to show typical application. It is a 62-ft span county bridge in Buchannan County, Iowa. The design utilizes a single tee girder shape with high-strength, corrosion-resistant steel. Speed of construction comes from eliminating the need for prestressing or post-tensioning, thus allowing the county crews or their local contractors to produce the bridge girders without outside help. The single tee flange is wide. The flanges are set next to each other with a narrow longitudinal ultra-high-performance concrete, in order to eliminate the need for time consuming cast-in-place decks or composite topping. It is possible that the old bridge can be removed, and the new bridge constructed in several days, as all the new components are prefabricated.

TYPE, SIZE, AND LOCATION

The exiting through-type steel truss bridge is deemed deficient and scheduled to be replaced with concrete girders. Figure 1 shows the existing truss and the proposed concrete girders. This bridge is located on Daniel Ave. in Buchanan County, Iowa, spanning the Spring creek as shown in Figure 2. The existing bridge has a span of 62 ft and width of 24 ft. It was envisioned to provide a replacement option, which can be constructed by the local crew with minimal roadway closure. Therefore, precast conventional concrete girder was considered as an ideal candidate for this project to avoid the need for prestressing facility. The authors proposed precast superstructure system utilizing high-strength corrosion resistance steel instead of the prestressing steel. The girders can be cast on a storage area next to the bridge location to be lifted up and placed on the abutment in short time. This should accelerate the construction and reduce the cost of shipping and handling the girders.

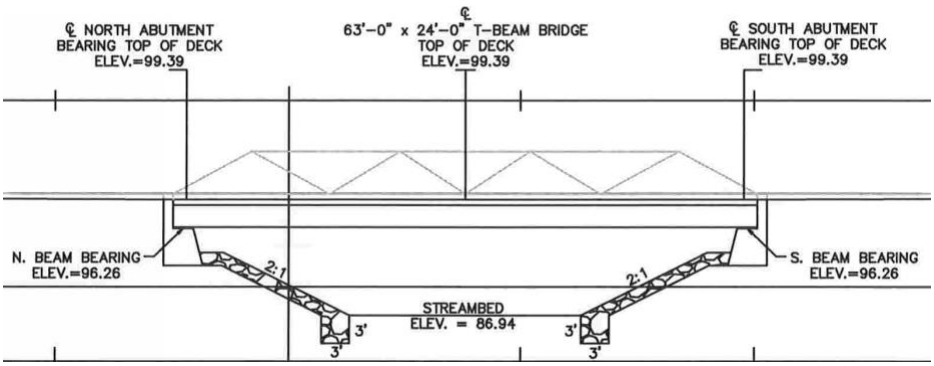

Figure 1- Existing Bridge Elevation

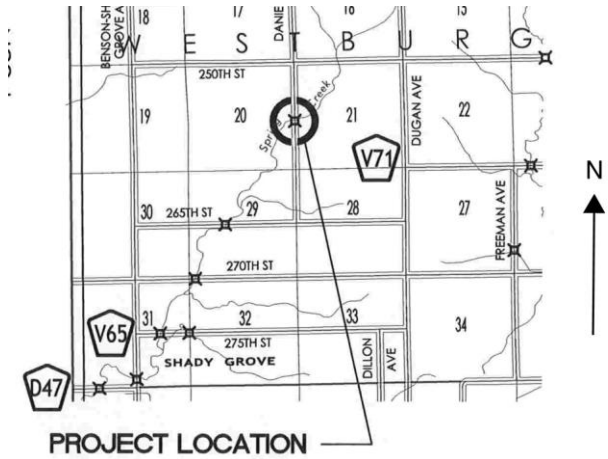

Figure 2- Bridge Location

BRIDGE REPLACMENT

While the substructure was rated to be in a good condition, the replacement girders were proposed to be placed on the existing abutment maintaining the original span and width. The replacement bridge cross section consists of four tee beams spaced at 6 ft as shown in Figure 3. It was planned to provide lateral continuity between the girders to prevent relative vertical displacement at the interface between the adjacent beams. Therefore, the girders top flanges have projected transverse reinforcements to be spliced after placing the girders on the bearings. The splice was designed utilizing cast-in-place (CIP) ultra-high-performance concrete (UHPC) longitudinal joints. Utilizing UHPC allowed minimum joint width.

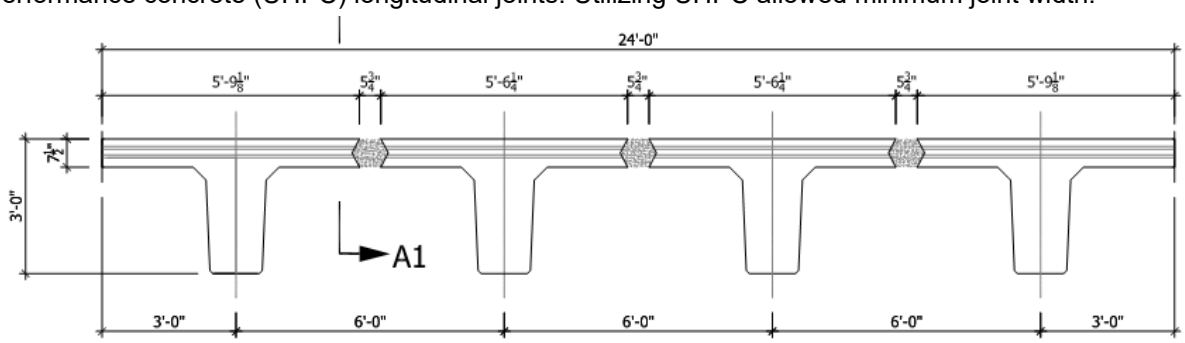

Figure 3-Replacement Bridge Cross Section

Each beam was designed to be conventionally reinforced with high-strength ASTM A1035 Gr. 100 reinforcement due to the high flexure demand. Tension bottom reinforcement consists of 14#11 rebar to satisfy the flexural reinforcement. This bottom rebars attributed to increase the effective moment of inertia of the cracked section satisfying the AASTO LRFD live load deflection recommendation. Shear force demand also was satisfied using #4 with variable spacing along the beam. Top and bottom transverse slab reinforcement were designed to be #3 at 6 in. spacing in both directions. Figure 4 shows the reinforcement details for the Tee-beam.

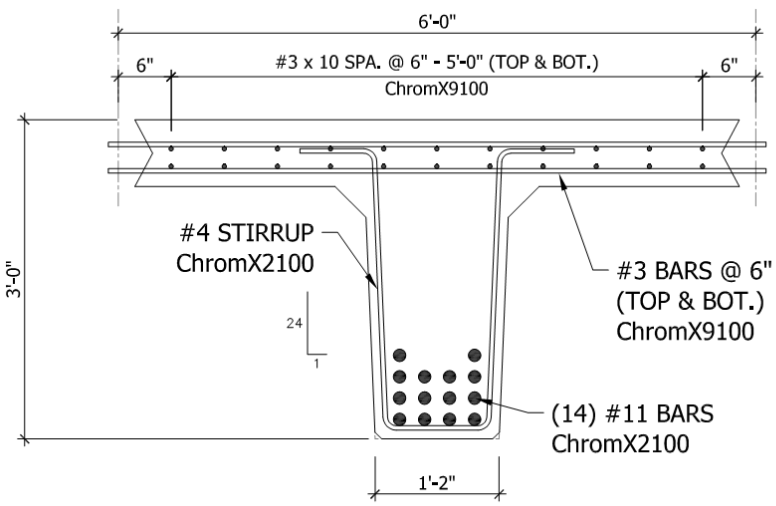

Figure 4- Typical Beam Reinforcement

ASTM A1035 CL rebars were utilized for the bottom tension and shear rebars. These rebars have chromium percentage of 2-4%. ASTM A1035 CS rebars were utilized for the deck transverse rebars. These rebars have chromium percentage of 8-11%. This, in turn, provide high corrosion resistance for the deck reinforcement, which is exposed to more severe exposure to pooling and deicing salts than the web of the beam. A longitudinal joint width of 5¾" was found adequate to splice #3 transverse bars providing embedment length more than 10 d_b (FHWA) in UHPC as shown in Figure 5. FHWA research project concluded that any precast element interfaces to bond with CIP UHPC shall include female–female shear keys. The shear key is simplified based on investigating different practice by different departments of transportation as shown in Figure 6. The early high strength of UHPC allows to open the bridge for traffic within two weeks.

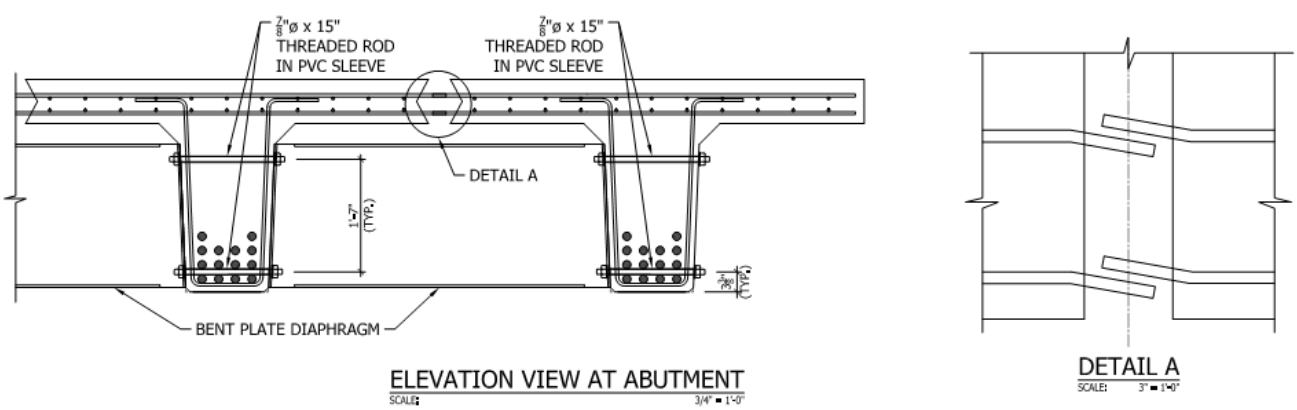

Figure 5- transverse rebar splice in UHPC Joint

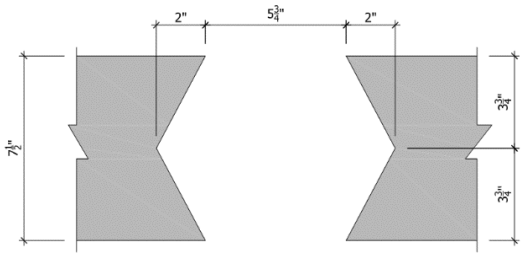

Figure 6-Shear Key Detail

CONCLUSION

Precast concrete girders reinforced with high strength steel can effectively accelerate the bridge construction due to eliminating the need for prestressing or post-tensioning, thus allowing the county crews or their local contractors to produce the bridge girders without need to specialty.

The wide flange of the tee beam eliminates the need for time consuming cast-in-place decks or composite topping.

REFERENCES

Graybeal, B. (2014). “Design and Construction of Field-Cast UHPC Connections,” Federal Highway Administration, U.S. Department of Transportation, Report No. FHWA-HRT-14-084, McLean, VA.

REPLACING AN INTERSTATE BRIDGE DECK WITHIN A WEEKEND CLOSURE – CASE STUDY OF ACCELBRIDGE DECK SYSTEM

Eddie He, AccelBridge, 312-952-3071, ehe@AccelBridge.com
John Whittaker, Kubricky Construction, 518-792-5864, jwhittaker@dacolins.com
John Gonyea, Fort Miller, 518-695-5000, JGonyea@fmgroup.com

ABSTRACT

The Colchester I-89 Bridges Project was a rehabilitation of four existing bridges (77N, 76N, 77S, and 76S) located on the busiest interstate segment in Vermont. Rehabilitation of these bridges included replacement of heavily deteriorated bridge decks with new precast deck panels, steel repairs, as well as replacement of the bridge backwalls, approach slabs, and sleeper slabs. This project allotted for 6 separate weekend shut downs to perform the rehabilitation work on four separate bridges, using AccelBridge™ full depth precast deck.

Work on a bridge typically involved two weekend closures. The first weekend was for rehabilitation work on abutments and sleeper slabs on the approach. The second weekend included demolition and replacement of the existing bridge deck. Decks of all four bridges were replaced successfully, each within a weekend closure. The use of match cast joint and compressing the precast deck with girder jacking makes AccelBridge™ installation straightforward. It significantly simplifies construction, reduces field labor and improves construction speed.

INTRODUCTION

AccelBridge™ is a patented technology, with the goal of making full depth precast deck construction simple by using conventional materials and proven methods. The system consists of match-cast deck panels compressed by jacking against bridge girders. The typical construction steps for AccelBridge™ are:

1. Erect precast deck panels on supporting girders.
2. Make both end panels composite with the girder while all the remaining deck panels are free to move in the longitudinal direction.
3. Apply jacking force at the jacking closure to compress deck panels against the steel.

Figure 1 shows schematics of AccelBridge™ deck panel jacking to provide the necessary longitudinal compression.

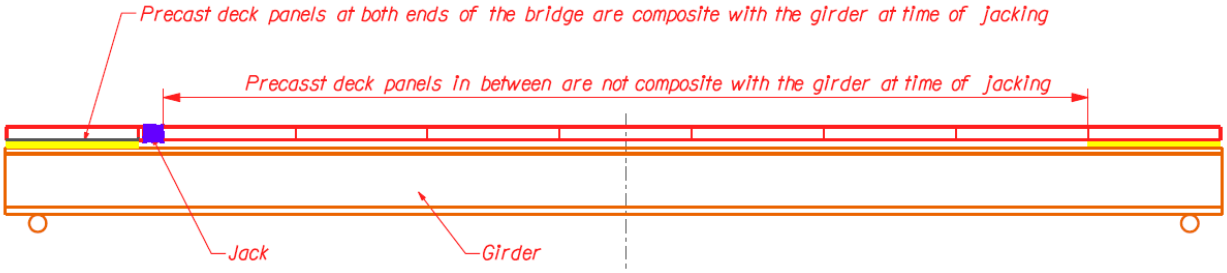

Figure 1. *AccelBridge™* principles

At the time of jacking, only deck panels at both ends are fixed to the girder while all other panels between can move relative to the girder. The jacking force then results in compression in the deck and tension in the girder. After all panel to girder shear connectors are grouted, the deck compression will be permanently locked in. This method allows the deck to be in compression without any post-tensioning.

AccelBridge™ was first successfully used in the Bayou Lafourche Bridge, an FHWA technology implementation project with LADOTD. During construction, the technology was validated by instrumentation measuring deck compression, girder stress, and system stability. After completion, the structure was proven by a full-scale live load test.

AccelBridge™ offers the following advantages over other deck systems such as post-tensioned deck or UHPC joint:

- ***Enhanced durability*** - deck is in compression during service condition and has no corrosive materials (such as rebar or PT) across deck joints. Thus, nothing to corrode at the joint.
- ***Simple to build*** – AccelBridge™ is straightforward to construct by using only conventional construction materials (epoxy, concrete and grout) and proven details (match-cast joint). This method greatly reduces field operations by eliminating the most cumbersome cast-in-place joints that are required in other precast deck systems.
- ***Cost*** – The bid price of Bayou Lafourche indicated that AccelBridge™ installation techniques costs much less than other full depth precast deck systems. In order to accurately gauge the cost, LADOTD specified an individual pay item for installing and jointing the deck with AccelBridge™ method (separated from the precasting of deck panels). The bid price of installing and jointing the deck with AccelBridge™ jacking method ranged from $ 1.21 to $1.36 per sq. ft. of deck for the lowest three bidders. In comparison, the average cost for installing and joint the deck is $8 - $11 per sq. ft. for post-tensioning system and $15 - $ 25 per sq. ft. for UHPC jointing system.
- ***Speed*** - The average panel erection cycle, from lifting a deck panel to complete jointing, is less than 20 minutes. AccelBridge™ has a fast version which eliminates jacking closure pour operations and further shortens construction time. The fast version is feasible for deck replacement with overnight-only closure for projects where maintaining traffic flow is critical.
- ***Increased Girder Capacity*** - AccelBridge™ jacking method typically benefits the supporting girders, by introducing a negative moment at girder midspan. Therefore, AccelBridge™ deck jacking can potentially increases the structure load rating without having to strengthen existing girders.
- ***Versatility*** - AccelBridge™ can be applied to most types of girder bridges; concrete or steel, I girder or box girder, single span or multiple spans. It can also be used for deck replacement or new construction.

PROJECT GENERAL DESCRIPTION

The four bridges were two pairs of I-89 bridges (76NB, 76SB, 77NB, 77SB). Each pair of bridges were identical, carrying two lanes of I-89 traffic in each direction. All bridges were similar in structure layout, with 34'-10" wide deck supported by five steel girders at 3-span continuous configuration. The bridge length was 151 ft for 76NB and 76SB, and 185 ft for 77NB and 77SB. Bridges 76NB and 76SB were at a 17-degree skew. The project scope was to replace each bridge deck, reusing the existing girders as well as removing and replacing the existing backwalls and approaches.

VTrans required each bridge be reconstructed in two weekend closures, one for abutment and approach work, and the other for removing / replacing the deck and approach slabs. Kubricky was retained by VTrans to deliver the project under a CM/GC contract. The final decision was to use an innovative full depth precast deck system (AccelBridge™) for the deck replacements.

Typical deck panels length (in the longitudinal direction of the bridge) was 11'-10' for Bridges 76 and 11'-6" for Bridges 77. Panels were cast full width of the bridge (34'-10") with three longitudinal crown lines. For bridge 76, panel joints are cast parallel to the 17-degree skew angle (see Figure 2 below).

A jacking closure, approximately 3 ft wide, was located close to the middle of the deck. The jacking closure was the only cast in place joint 0n a bridge, all other deck joints are epoxy match-cast joints.

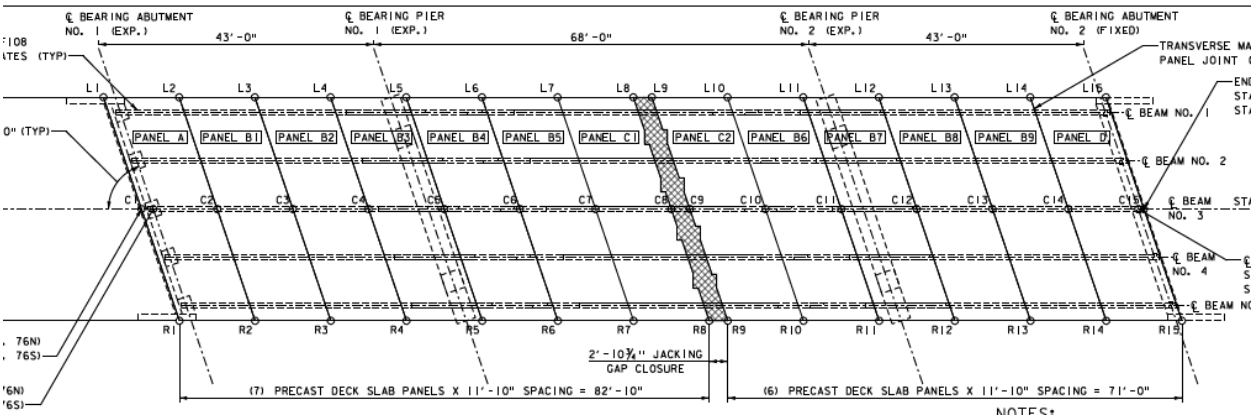

Figure 2. Deck panel layout of Bridge 76N

Figure 3. Bridge 77S (upper) in construction, Bridge 76N (lower) is completed.

PRECAST OPERATION

Precast work was performed by Fort Miller using the long line casting method. Panels were poured in two sets, in a “checkerboard” pattern to achieve match-cast. After the first set of panels was poured, the forms were removed from the edges that butt up to the next set of panels. The second set of panels were poured directly against the surface (with keyway) of the first set, so that the pieces would fit perfectly. The joint between the two panels had a release agent applied so when the concrete cured they could be separated.

Match-cast deck panels can be produced in a manner similar to that of precast segmental, but greatly simplified in terms of geometry control and form work setup. One of the difficulties with match-cast in segmental bridge is geometry control, which has been a major concern of precasters. However, deck panels in AccelBridge™ can be cast flat without consideration of the actual profile of the bridge. Since the depth of precast deck is small (only about one-tenth of that for a typical segmental box designs), the joint opening due to deck vertical curvature is small and can be absorbed by the epoxy filler layer; eliminating the need to consider the vertical profile in deck panel casting. Thisresults in significant construction simplification and cost savings.

Before the panels are taken apart, geometry control marks are installed and surveyed. These marks will then later be used to guide the erection.


Figure 4 (left), A phase one panels with transverse forms and rebars
Figure 5 (right), A phase two panel ready to be poured against phase one panels

Panels were cast to the full width of the roadway, which is 34'-10'. Panels were shipped with a rocking frame to ensure they will not be subjected to torsion due to torsional deformation of the trailer while travelling on uneven road surface.

FIELD INSTALLATION

The deck replacement sequences were:

a) Remove existing deck
b) Clean girder top flange
c) Conduct girder top flange elevation as-built survey to calculate panel haunches
d) Install panel support shims and haunch forms
e) Erect deck panels using come-alongs to close the epoxy joint
f) Grout the shear connector pockets and haunches for both end panels
g) Form jacking closure and install jacks
h) Apply jacking force (after the end panel grout reaches 3.5 ksi)
i) Pour jacking closure phase 1 (area around the jacks)
j) Grout all remaining shear pockets and haunches
k) Release jacks (after jacking closure phase 1 pour reaches 2.5 ksi)
l) Pour jacking closure phase 2

Haunch forming and panel support

Panel elevations are set by shim packs located at panel joints at each girder. A Shim pack consists several 4”x6” HDPE sheets. The height of the shim pack at each location is calculated from the as-built survey of girder top flanges.

Haunch forms consisted of a pair of steel angles with a top layer of soft foam. Haunch forms were set before panel erection, and the top of soft foam was set to be ¼” higher than final elevation. When the panels were erected, panel weight compressed the soft foam to achieve a tight seal.

Figure 6. Lifting panel

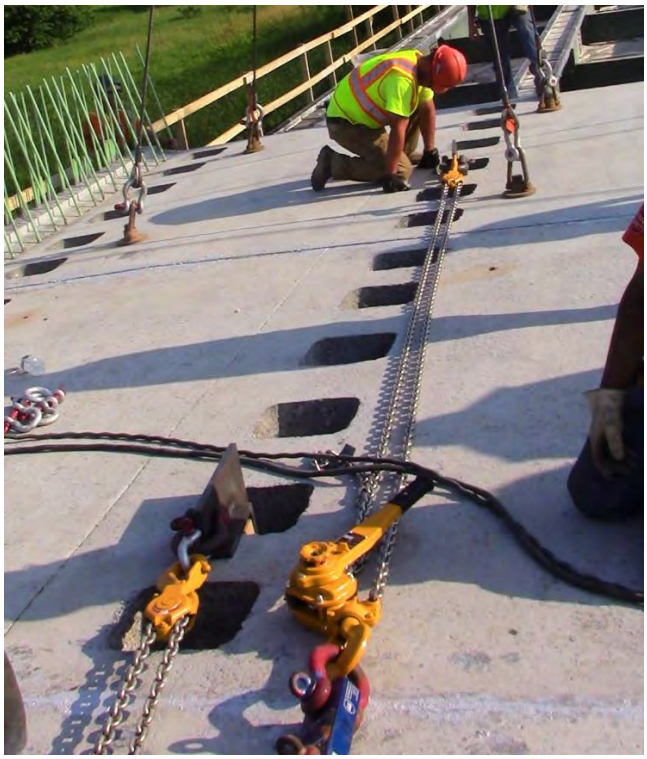

Figure 7. Using come-alongs to close panel joints.

Panel installation

Panel installation is very straightforward. The average erection rate of this project was about 20 minutes per panel (see Figure 7).

All joints between precast panels were match-cast. The panel joint is clean with no exposed rebars.

Epoxy is first applied to the match cast surface, then panels are pulled together to squeeze the epoxy and close the joint. Shear keys on the match-cast joint simplifies panel placement by self-guiding the panel into final position. The temporary joint compression force is provided by come-alongs. Due to the simple geometry of deck panel, the joint can be closed tight with much less compression than that of segmental box. Experience with AccelBridge™ erection indicated that an average compression stress of 10 psi is enough to achieve a tight match-cast joint (see Figure 8)

Shear pocket

The composite action between panel and girder is provided by shear studs housed in shear connector pockets. Studs were welded after the deck panel was in place. This is a preferred approach from a safety stand point, since construction crews can work from a stable platform. Non-shrink grout was then used to grout haunches and shear pockets. Gravity grouting is then utilized as long as the mix is made and installed in a flowable state..

Jacking

The jacking was accomplished by utilizing a system that is not only strong enough to create the 1400 kip jacking force required but also can apply that force securely distributed to the deck panels(see Figure 9). The jacking procedure for this application was set up to be applied over seven incremental steps. Each step was set up so that the panels can be monitored as to how they react. Once the preferred jacking force was met, jacking collar locknuts were utilized to lock in that force while other work was completed

Jacking closure

Jacking closures were poured in two stages. Stage 1 (areas outside of the jacks) was poured right after the target jacking force was achieved. After the stage 1 pour reaches 2.5 ksi, jacks were removed, and the stage 2 closure was poured.

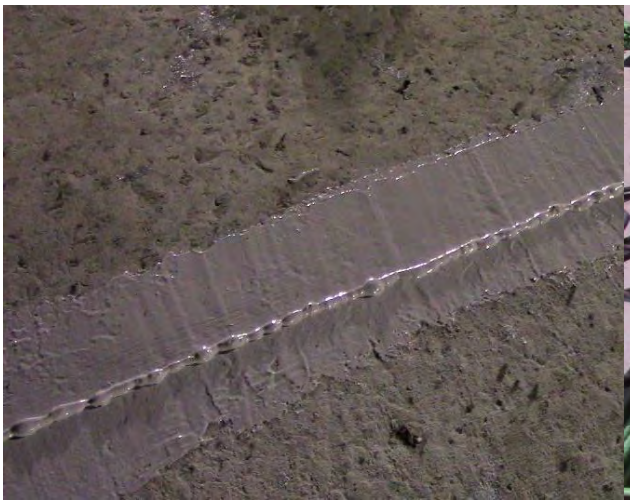

Figure 8. A close-up picture of a complete deck joint.

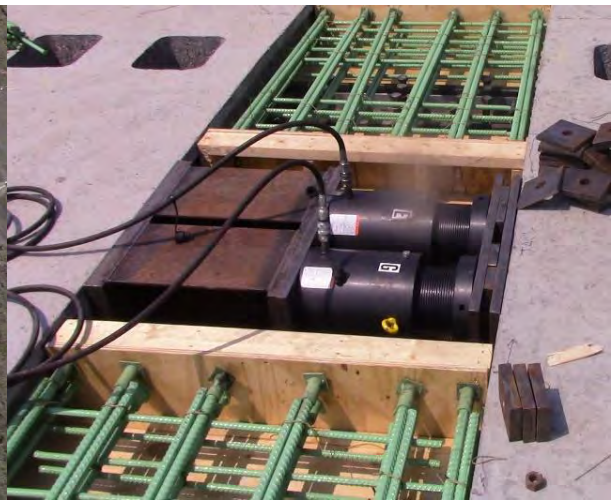

Figure 9. Jacking closure.

Overall schedule

The deck replacement of each bridge was completed within one weekend closure although the actual progress of each bridge varied. Each closure period schedule is mainly affected by weather conditions and grout / concrete strength gain. The general timeline of each deck replacement was:

- Friday night to Saturday noon, removal of existing deck and cleaning of steel girders.
- Saturday afternoon and evening, erecting panels.
- Sunday morning, installation of jacking closure forms and jacks.
- Sunday noon jacking, / jacking closure concrete pour/ grouting haunches.

In addition to the deck replacement, precast approach slabs were also installed during the same weekend closure.These were typically installed after the deck slabs were in place and the cranes were available to set them. Approach slabs on this project were set on a fine graded bed of subbase and high performance concrete was poured in the joints to lock them together.

The earliest time that the interstate was opened to traffic for this project was 3am (56hrs) Monday for Bridge 77S. Bridge 77N however took the longest time, opening to traffic at 9am (62hrs). The reason for this was mainly due to two rain storm events during Saturday and Sunday, resulting in a work stoppage of approximately 6 hours.

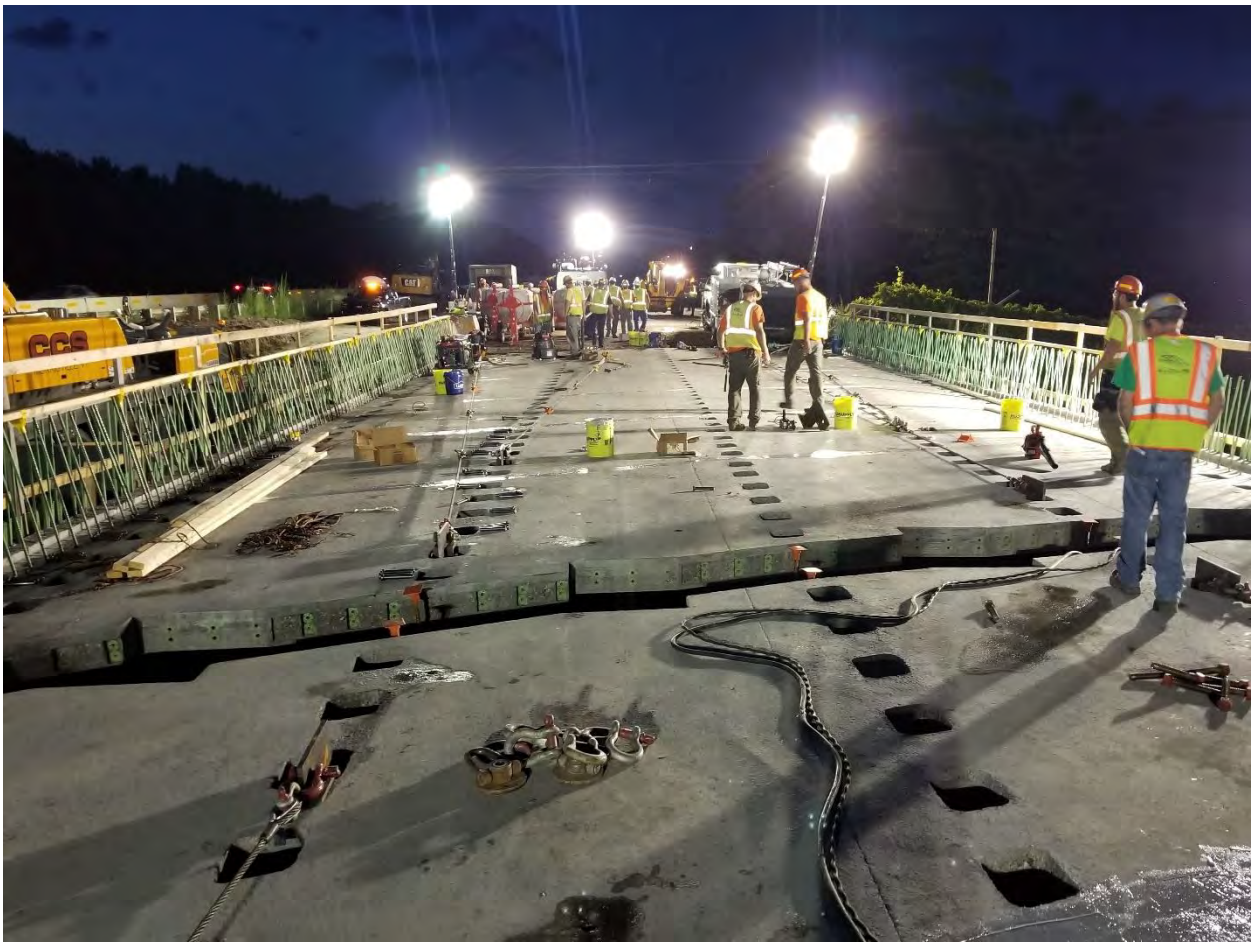

Figure 10. Panel erection completed by Saturday night.

OBSERVATIONS AND LESSEN LEARNED

Planning and coordination

Planning and coordination is extremely important for such a time critical job. For this project, the resident engineer, designer, supplier and contractor worked closely together to prepare a very detailed hourly schedule identifying every task at hand. The contractor also worked closely with AccelBridge to prepare detailed work execution plan, including an over 150 step by step list to cover tools, materials and actions. This provided to be extremely beneficial in setting up the work prior to the closure periods as well as keeping the project on schedule.

Geometry control

Placing the first panel accurately was extremely important since any placement error in panel orientation will be magnified many times as more match-cast panels are assembled. The placement of all subsequent panels was straightforward since the match-cast shear keys prove the self-alignment function. Panel offset must be closely monitored during erection however as debris and other elements can cause the joints to not completely align causing offsets. If assembled panel offset is over the limit, geometry correction could be introduced, by shimming the match-cast joint similar to that of which has been well established in segmental construction. Geometry correction was utilized on only one out of the four bridge decks for this project and placement tolerance was within the allowable tolerance (max ½" offset).

Assembling panels

By utilizing a shared shim stack at each joint location, vertical geometry of the panels was kept consistant and created the desired profiles of the bridge. The match-cast shear key guides were then lined up extremely closely to start allowing the panel to shift to the correct longitudinal and lateral position automatically.

Although it took time to set the first panel accurately, subsequent panels could typically be placed within 20 minutes, from lifting panel from the delivery trailer to closing the epoxy joint.

Strength gain of grout and closure concrete

The uncertainty in strength grain of grout and closure concrete did become the major challenge in this project as it was on the critical path of the project schedule several times throughout the shutdown. There are three key milestones in strength gain:

1) 3.5 ksi grout strength for end panel haunch before jacking force can be applied,
2) 3 ksi for jacking closure phase 1 concrete before removing jacks, and
3) 3 ksi for jacking closure phase 2 concrete before opening to traffic.

The time it took to achieve such strength varied significantly in the project. In future projects, there is great need to focus on acquisition of materials with a highly reliable early strength gain time.

CONCLUSION

The AccelBridge™ precast deck has been proven to be a simple and practical Accelerated Bridge Construction method. Using only conventional materials and straightforward details (match-cast joint) significantly reduces the risk, in terms of schedule and quality. Compared with other full depth precast deck systems, such as Post-tensioning and UHPC joints; AccelBridge™ reduces field work, is quicker to install, and is more cost-effective. In addition, there is no rebar or PT across the panel joints, which enhances durability since there is nothing to corrode.

ACKNOWLEGEMENT

The success of this project is a result of great collaboration of our team members: Vermont Agency of Transportation (Owner), Kubricky Construction (CM/GC), Fort Miller (precaster), VHB (designer) and AccelBridge™ (deck technology developer).

LIGHTWEIGHT MODULAR ACCELERATED BRIDGE SYSTEM FOR MANAGED CAR LANES

Saurabh Mittal, P.E., S.E., Horner & Shifrin Inc., (513)886-5292, sam.mittal@chicagobooth.edu

INTRODUCTION

There is a widening infrastructure investment gap globally. In emerging economies majority of infrastructure investments are tied to greenfield projects while in developed countries investments are earmarked for brownfield projects. To keep up with urbanization trends and population growth, investments in infrastructure need to increase by more than 60% globally. In United States, $2.75 trillion of infrastructure investments were estimated between 2016 and 2020 with the investments on roads representing about 25% of the total investments as shown by Arezki et al (1).

The Eisenhower era infrastructure is over 54 years old and way past the 50-year bridge design life. Aging infrastructure requires high maintenance. On the other hand, severe congestion on important urban interstate corridors is leading to prohibitive economic costs. Top 10 highway interchange bottlenecks in the country cause an average of several million truck hours of delay as documented in AASHTO Report (2).

This paper proposes managed car lanes and combines metal grid deck systems with Simple for Dead Load - Continuous for Live Load (SDCL) approach to create a rapidly scalable installation system for highway bridges. The high initial cost of metal grid decks is offset by quicker installation, lower cost of construction, and longer service life. The modular approach makes for easy construction, which is further enhanced by the lightweight superstructure.

CONGESTION AND DIFFERENT LANE MANAGEMENT STRATEGIES

In 1960's, Eisenhower interstate highways were public goods – non-exclusive and non-rivalrous in economics terms. With increased urbanization, interstate highways have transformed into common goods or private goods (in case of tolled roads) during rush hours. It is estimated that 40% of congestion is attributed to inadequate infrastructure and 10% to construction necessary to fix it as per FHWA (3).

Congestion is measured by Levels of Service (LOS) (4), which indicates the level of traffic flow based on performance measure like vehicle speed, density, etc. LOS is denoted using letter A to F, with A being the free flow condition and F being the breakdown flow. LOS D indicates a high density flow in which speed and freedom to maneuver are severely restricted and comfort has declined even though flow remains stable. The 2018 Federal Highway Administration (FHWA) annual report for congestion trends (3) indicates that the freeways in 52 biggest US urban centers on an average day operated 4 hours 16 minutes under free flow speeds, registered a trip delay of 33% and provided a trip reliability of 212% for a day each month.

Different lane management strategies have been used by the operators to combat congestion as detailed by Dowling et al (5). These are primarily based on three levers – access control to highways, user eligibility, and pricing. The goal is to optimize explicit qualities such as freeway efficiency, throughput and implicit qualities such as travel time reliability, higher speeds, etc. Historically, the most widely used form of managed lanes have been the High Occupancy Vehicles (HOV) lanes, which restrict the use of lanes to busses and carpool vehicles. More recently, High Occupancy Tolled (HOT) lanes with or without variable congestion pricing have been used successfully to maintain high level of service during peak use hours. Similarly, truck lanes are used to move freight at high levels of service as determined by Truck LOS Index.

The 2014 United States Census Bureau surveys data indicates that on a typical day 76% of the 143M commuters travelled to work alone. With rising costs of building infrastructure and funding crunch there is need to build and utilize infrastructure more efficiently. The use of managed car lanes is proposed in this

study as a subset of HOV lanes to cater to carpool vehicles under FHWA vehicle classes 1, 2 and 3 only as a means to address the very high percentage of car traffic on urban roads during rush hour.

AASHTO DESIGN LIVE LOADS VERSUS CONTEMPORARY CAR LOADS

FHWA classifies vehicles into 13 classes. Class 1 includes motorcycles, class 2 includes passenger cars while class 3 includes other two-axle, four-tire single unit vehicles. Classes 2 and 3 also include vehicles pulling other 1- or 2-axle trailers. The upper bound for Gross Vehicle Weight Rating (GVWR) of class 1, 2, and 3 vehicles is 6 kips, 10 kips and 14 kips respectively.

The light and medium duty trucks of FHWA classes 2 and 3 can be simulated effectively by the notional H-10 design truck with a total gross vehicle weight of 20 kips (4 kips front axle and 16 kips rear axle spaced 14-ft apart). A corresponding lane loading of 480 lbs/ft is used in conjunction to follow AASHTO (6) LRFD reliability standards as well as to ensure that the live loads applied are comparable to pedestrian loads as used by different design codes and researched by Nowak (7).

A research of contemporary 2-axle cars and trucks found the maximum GVWR of a two-axle, four-tire single unit heavy duty truck (such as Ford 350, RAM 3500, Chevy Silverado) to be 11.5 kips. The design loading of H10 truck and lane is, thus, appropriate for managed car lane bridges.

PROPOSED BRIDGE SYSTEM

The girder design utilizes SDCL detail to forgo field splicing and accelerate bridge construction. A literature review revealed that different states use varying details to achieve connection continuity at the pier but all involve use of a load transfer mechanisms from girder flanges to a pier diaphragm. The pier diaphragm is poured monolithically with the pier diaphragms after deck is set over the spans. The diaphragm is designed to provide lateral support at the ends and resist shear at the girder compression flange. Long-term monitoring of results from Sprague street over I-680 Bridge and 262nd street bridge over I-80 by Yakel and Azizinamini (8), showed no performance issues for SDCL construction detail. The Sprague bridge used W40x249 rolled section for two 97-ft spans, while 262nd street bridge used steel pre-topped box girders.

Several deck systems were evaluated – SPS deck system, Fiber Reinforced Polymer decks, full depth grid reinforced concrete deck, partial depth grid reinforced concrete deck, and exodermic deck. Among the metal grid decks, precast partial depth gird deck offers a modular deck system that can be installed at a rapid pace (up to 2000 sf/day). For this analysis, the proprietary precast exodermic deck system was chosen due to its rapid installation, durability, and the best strength to weight ratio among metal grid decks. The deck design for two girder spacings (10' and 14' c/c girder) using the above notional loads were used in the analysis. The 10-ft and 14-ft spacings yield a 7" and an 8" thick deck that weigh 65 lbs/ft^2 and 68 lbs/ft^2 respectively. The panels can be prefabricated in size of 8-6" wide by up to 45' long panels.

Analysis and design of bridges is performed for various span layouts per AASHTO using Finite Element Analysis software LARSA 4D (Melville, New York) (Figure 1). The design vehicular live loads are applied as per AASHTO 3.6. The negative moments at supports are taken at 90% of two H10 trucks fifty feet apart in each span and combined with a 480 lbs/ft uniform lane load. The models use the following assumptions:

- Exodermic deck: concrete: f_c' = 4.0 kips/in^2, w_c = 0.145 kips/ft^3; Grid Steel - f_y = 50.0 kips/in^2; Rebar Steel, f_y = 60 kips/in^2; concrete cover over steel - 2 in.; Sacrificial wearing surface – 0.5 in.
- Haunch thickness = 1 in.; future wearing surface – 50 lbs/ft^2; Barrier weight – 650 lbs/ft
- Girder spacing – 12 ft; Overhang cantilever - 3.4167 ft; structural steel – A588

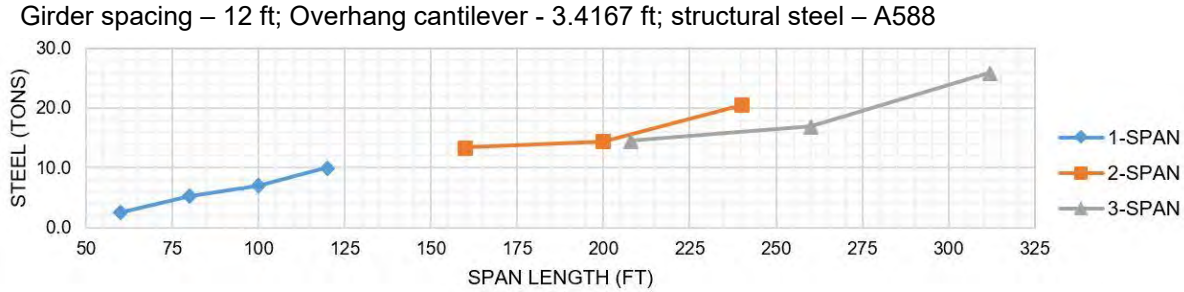

Figure 1 – Girder steel weight as a function of span length for 12'-0" girder spacing.

This Bridge System provides the many advantages of a typical ABC technique –

1. Modular installation - The bridge system can be installed in two different sequences. In sequence 1, the girders and cross-frames are placed on the substructure, the modular deck is installed next and the pier SDCL connection is achieved in the end by using rapid setting concrete. In sequence 2, the girders, cross-frames and the deck are constructed for each span off-site. In this case, the weight of the exodermic deck is kept to 50-55 lbs/ft^2 by using light weight concrete. The bridge is then installed span wise and the diaphragms at pier locations are poured in the end to achieve SDCL connection.
2. Low life cycle costs – Apart from cost savings owed to reduced construction impact on traffic flow and project delivery time, the system provides material savings. For one span bridges, superstructure steel uses an estimated 50% less structural steel than conventional bridges as calculated by Morgan (9). Due to light weight superstructure and lower live loads, substantial cost savings would be achieved in substructure construction considering that deep foundations are usually one of the most expensive pay-item on the project.
3. Durability – exodermic decks have an average life span of 70 years almost matching the substructure life span resulting in a long-lasting structure with no future re-decking required.

The proposed Bridge system is applicable under the following circumstances –

- Owners looking for inexpensive temporary Maintenance of Traffic as part of a larger project.
- Agencies looking to stretch dollars for new bridges with very low Average Daily Truck Traffic.
- Agencies looking to augment highway capacity in urban built-up environments to combat congestion and functional obsolesce of existing bridges.

CONCLUSIONS

This paper proposes use of managed car lanes to relieve pressure on existing infrastructure by giving policy planners a tool to effectively augment and manage existing bridge infrastructure network. The proposed bridge superstructure is 50% lighter, incorporating light weight characteristics of structural components (deck and girders) with lower live loads and SDCL connection details, resulting in a very efficient structure.

ACKNOWLEDGEMENTS

The author would like to thank Michael Riley of LB Foster Company, Eduardo Flores and Mohamad Faraj of Illinois Tollway, and Michael Banashek of Horner & Shifrin for support to perform this study.

DISCLAIMER

The paper in an independent research work by the author and not supported or owed to any organization.

REFERENCES

1. Arezki R., Bolton P., Peters S., Samama F., and Stiglitz J. (2016), From Global Savings Glut to Financing Infrastructure: The Advent of Investment Platforms, International Monetary Fund, WP/16/18.
2. AASHTO Bridging the Gap (2008), American Association of State Highway and Transportation Officials, Washington, DC.
3. FHWA (2018), 2018 Urban Congestion Trends, Federal Highway Administration, Washington, DC.
4. Transportation Research Board (2016). Highway Capacity Manual: A Guide for Multimodal Mobility Analysis, 6th ed., Washington, DC.
5. Dowling R., Margiotta R., Cohen H., Skabardonis A. (2013), Guide for Highway Capacity and Operations Analysis of Active Transportation and Demand Management Strategies, Federal Highway Administration, Washington, DC.
6. AASHTO (2018). LRFD Bridge Design Specifications, 8th ed., American Association of State Highway and Transportation Officials, Washington, DC.
7. Nowak, A. S. and Collins, K. R., 2000. Reliability of Structures, McGraw-Hill International Editions, Civil Engineering Series. The McGraw-Hill Companies, Singapore.
8. Yakel, A., Azizinamini, A. (2014), Field Application Case Studies and Long-Term Monitoring of Bridges Utilizing the Simple for Dead-Continuous for Live Bridge System, AISC, Engineering Journal, Third Quarter, pp.155-176.
9. Morgan, S. A. (2010). Towards the Development of Efficient and Economical Short Span Modular Bridges, Department of Civil & Environmental Engineering. Morgantown, WV, West Virginia University.

INCREASE SERVICE LIFE OF CONCRETE STRUCTURES WITH LIGHTWEIGHT AGGREGATE

Kenneth S. Harmon, P.E., Stalite Lightweight Aggregate, (704) 232-0160, kharmon@stalite.com

ABSTRACT

A recent study was conducted to determine the effects of lightweight coarse and fine aggregates on the transport properties and other durability related properties of structural concrete. Transport properties are used in concrete service life prediction computer software programs. The results of the study discussed in this paper show that the time to corrosion in a reinforced concrete structure will be increased by up to 94% when lightweight coarse aggregate concrete mixtures are used compared to a comparable mixture with normalweight aggregates. The study also shows that the replacement of normalweight sand with lightweight fine aggregate can result in an increase in time to corrosion by as much as 1-1/2 to three times.

INTRODUCTION

Of the 614,387 bridges in the National Bridge Inventory, almost four in 10 (39%) are over 50 years or older, and an additional 15% are between the ages of 40 and 49 years. The average bridge in the U.S. is 43 years old. Most of the country's bridges were designed for a lifespan of 50 years, so an increasing number of bridges will soon need major rehabilitation or retirement (1). New technologies are helping engineers design and build bridges better and faster while also improving maintenance for longer bridge life. Owners and designers of many new bridges and other structures exposed to weather conditions now specify a design life of 100 years or more to ensure durability and sustainability. This paper presents details and conclusions of several recent studies on the cracking tendencies of lightweight concrete and internally cured concrete and how they led to a study for the Expanded Shale, Clay, and Slate Institute (ESCSI) on how lightweight coarse and fine aggregates can impact the transport properties and other durability related properties of concrete.

EXPANDED SHALE, CLAY, AND SLATE LIGHTWEIGHT AGGREGATE

Last year, the expanded shale, clay and slate industry entered its second century on the anniversary of US Patent No. 1,255,878 being awarded to Stephen J. Hayde for his invention of the rotary kiln process for manufacturing structural lightweight aggregate. As shown by the studies which are the topic of this paper, the spirit of research and experimentation which preceded this first patent issued in 1918 is still very much alive today. The limited resources and technology available to Stephen Hayde, working as an individual, have been superseded by the improved technology and organized research possible only through the shared knowledge and shared financial support offered by a formal industry association, the Expanded Shale Clay and Slate Institute (ESCSI), founded in 1952 and now comprising an organization of manufacturers of expanded shale, clay, and slate (ESCS) lightweight aggregate (2). ESCS is a ceramic material produced by expanding and vitrifying select shale, clay, or slate in a rotary kiln. The process produces a high quality ceramic aggregate that is structurally strong, durable, environmentally

inert, low in density and highly insulative. It is a natural, non-toxic, absorptive aggregate that is dimensionally stable and will not degrade over time.

Lightweight aggregate particles have a low-particle relative density because of their cellular pore system. The cellular structure within the particles is developed by heating ESCS raw materials to incipient fusion. At this temperature, gases are evolved within the pyroplastic mass, causing expansion, which is retained upon cooling. ESCS lightweight aggregates contain a uniformly distributed system of pores that have a size range of approximately 5 to 300μm, developed in a continuous, relatively crack-free, high-strength vitreous phase. Pores close to the surface are readily permeable and fill with water within the first few hours to a few days of exposure to moisture. Interior pores, however, fill extremely slowly, with many months of submersion required to approach 10% to 30% saturation. Interior pores are essentially non-interconnected and some of the pores remain unfilled after years of immersion (3).

REDUCED CRACKING TENDENCY OF LIGHTWEIGHT CONCRETE

Early-age cracking of concrete bridge decks, typically caused by thermal effects, drying shrinkage, and autogenous shrinkage can have detrimental effects on long-term behavior and durability. Darwin and Browning (2008) reported that by controlling early age cracking, the amount of cracking at later ages should remain low, and that early-age cracking can significantly increase the rate and amount of chloride penetration (from deicing salts), which may accelerate the corrosion rate of embedded reinforcing steel (4). A survey conducted by the Federal Highway Administration (FHWA) found that more than 100,000 bridges suffer from early-age cracking (5). Given the abundance of cracking observed in bridge decks, and the impact of early-age cracking on long term performance and durability, it is imperative that bridge deck concrete be proportioned and placed to minimize early-age cracking. Cracking of hardening concrete occurs when the induced tensile stress exceeds the tensile strength of the concrete. The development of in-place stresses is affected by the shrinkage, coefficient of thermal expansion, setting characteristics, restraint conditions, stress relaxation (creep-adjusted modulus of elasticity), and temperature history of the hardening concrete. The tensile strength (and strain capacity) increases as the hydration of the cementitious system progresses. The tensile strength is impacted by the cementitious materials, the water-cementitious materials ratio, the aggregate type and gradation, the degree of curing (internal/external) provided, and the temperature history of the hardening concrete. Quantification of many of the mechanisms mentioned above is quite complicated at early ages, and many of these variables have complex interactions (6).

In 2010, ESCSI sponsored a research project at Auburn University where the effect that the use of lightweight aggregate (LWA) has on the cracking tendency of concrete was evaluated by cracking frame testing techniques. Cracking frames can measure the development of stresses due to thermal and autogenous shrinkage effects from setting until cracking. The combined effect of modulus of elasticity, creep/relaxation, coefficient of thermal expansion, thermal conductivity, autogenous shrinkage, and tensile strength on the cracking potential in a specific application is thus directly captured and quantified by this unique test setup. Since the specimen is sealed against water loss, the effect of drying shrinkage is not measured with this setup. A rigid cracking frame as developed by Dr. Rupert Springenschmid at the Technical University of Munich, Germany was utilized in this research project. The frame is designed to allow fresh concrete to be cast into temperature-controlled formwork within the frame. With this unique formwork, the concrete can be subjected to a variety of temperature profiles that simulate in-place conditions of bridge decks, elevated slabs, pavements, mass concrete structures, etc. The primary objectives of this research were:

- Develop and evaluate the cracking tendency of three types of lightweight aggregate bridge deck concretes relative to a typically used normalweight concrete mixture,

- Evaluate the effect of placement and curing temperature on the cracking tendency of concrete,
- Evaluate the modulus of elasticity, splitting tensile strength, compressive strength, coefficient of thermal expansion, and thermal diffusivity of lightweight concretes and determine their effect on the early-age cracking tendency,
- Evaluate the effect of three different source aggregates (shale, clay, and slate) on the development of mechanical properties and the cracking tendency of bridge deck concrete, and
- Determine the effectiveness of pre-wetted lightweight aggregate to provide internal curing moisture to mitigate autogenous stress development.

Three lightweight aggregate sources were evaluated by producing three different concretes with each of these lightweight aggregates and one concrete mixture with normalweight aggregate. Each concrete mixture was subjected to two types of controlled temperature histories while measuring the stress development from setting until the onset of cracking. To assess the effect of placing temperature, each mixture was placed at summer and fall placement conditions. Match-cured concrete cylinders were produced to determine the development of mechanical properties of each concrete mixture under various controlled temperature histories. The effect of the supplied internal curing water from lightweight aggregate was assessed by measuring the restrained stress development of concrete specimens cured under isothermal conditions. In addition, the coefficient of thermal expansion of the hardened concrete was assessed.

Internal Curing

Historically, lightweight aggregates (LWAs) have been used to reduce the density of concrete, thus reducing the dead load weight of slabs, girders, etc. In recent years, however, LWAs have been added to concrete to take advantage of the high absorption capacity of the aggregates to add internal curing water (in addition to batch water) for hydration. When cement hydrates, capillary pores are created. As the water in the capillary pores is consumed by continuing hydration or by atmospheric desiccation, the internal relative humidity decreases and stresses are induced. Pre-wetted high absorption particles can desorb water into the cement pore structure, thus reducing capillary stresses and providing water for hydration without increasing the initial water/cementitious material ratio. The process of providing additional water for capillary pore stress reduction and additional cement hydration through pre-wetted particles is called internal curing. Lightweight fine aggregates are generally used for internal curing purposes due to their greater dispersion compared to coarse aggregates. It has been shown that water from LWA can move 0.07 inches into paste around the aggregate particle (7).

Conclusions – Auburn University Research on Cracking Tendency of Lightweight Concrete

The following bullet points are some of conclusions from this research that were made about the effect of using lightweight aggregate on the cracking tendency and autogenous shrinkage of concrete (6):

- The use of pre-wetted lightweight aggregates in concrete can reduce or eliminate the stress development caused by autogenous shrinkage. The decrease in autogenous stresses is due to internal curing, because water is desorbed from the lightweight aggregates to fill capillary voids formed by chemical shrinkage.
- Internal curing concrete made with pre-wetted lightweight aggregate experienced *reduced* stress development due to autogenous shrinkage effects when compared to the normalweight concrete. Since the sand-lightweight and all-lightweight concretes can supply more internal curing water, they cause a greater reduction in tensile stresses due to autogenous shrinkage effects than the

internal curing concretes. The sand-lightweight and all-lightweight concretes used in this study completely prevented the development of tensile stresses due to autogenous shrinkage effects.

- The use of lightweight aggregates to produce internal curing concretes delays the occurrence of cracking at early ages in bridge deck concrete applications when compared to the normalweight control concrete. This improvement in cracking behavior is attributed to the increased tensile strength and decrease in modulus of elasticity, coefficient of thermal expansion, and autogenous shrinkage of the internal curing concretes when compared to the normalweight control concrete.
- The use of sand-lightweight and all-lightweight concretes significantly delays the occurrence of cracking at early ages in bridge deck concrete applications when compared to the normalweight control concrete. Although the sand-lightweight and all lightweight concretes experience greater peak temperatures, the significant reduction in coefficient of thermal expansion and modulus of elasticity lead to a significant overall delay in early-age cracking in bridge deck concrete applications.
- When compared to a normalweight control concrete, the introduction of lightweight aggregates in concrete effectively delays the occurrence of cracking at early ages in bridge deck applications.

BENEFITS OF INTERNAL CURING ON CONCRETE SERVICE LIFE

Over a decade ago, Cusson, Lounis and Daigle (8) investigated the impact of internal curing on the service life of high-performance concrete (HPC) bridge decks by using analytical models to predict the times to onset of corrosion, onset of corrosion-induced damage, and failure of decks. Three bridge deck design options were compared: (i) normal concrete deck; (ii) HPC deck with supplementary cementing materials (SCM); and (iii) HPC deck with SCM and internal curing. It was found that the use of internal curing can extend the service life of high-performance concrete bridge decks by more than 20 years, which is mainly due to a significant reduction in the rate of penetration of chlorides in concrete as a result of reduced early-age shrinkage cracking and reduced chloride diffusion. Compared to normal concrete, HPC with SCM and internal curing was predicted to add more than 40 years to the service life of bridge decks in severe environmental conditions. (8)

Also in 2009 – 2010, students at Purdue University under the direction of Professor Dr. Jason Weiss in cooperation with Tommy Nantung, Indiana DOT conducted a study of various aggregates for *"Development of Internally Cured Concrete for Increased Service Life"* (9). The goal of this study was to provide an improved understanding of the timing and distance of water movement from prewetted lightweight aggregates into the paste in concrete mixtures with internal curing. Through the use of x-ray absorption measurements and other testing, the results of this investigation indicated that internally cured concrete has great potential for use in transportation structures, specifically due to the reduced potential for shrinkage and thermal cracking, the reduced fluid transport, and the increased densification of the cementitious matrix.

Based on the conclusions of this Purdue University study, in 2013 the Indiana Department of Transportation (INDOT) commissioned the construction of four bridge decks to be made with a new class of internally cured, higher performance concrete (IC HPC). The IC HPC bridge decks that were cast were made by four separate producers, located in four different regions of Indiana. Dr. Weiss supervised another group of graduate students at Purdue University as they conducted an experimental investigation of these four internally cured bridge deck concretes. In addition, these same mixtures were reproduced at the local production facilities, except without the lightweight fine aggregate for internal curing. The service life was then estimated for these 8 bridge deck concretes using SIMCO's STADIUM® software. STADIUM® is a sophisticated finite element analysis software which predicts concrete degradation

kinetics and time before the initiation of reinforcing steel corrosion. The service life of each of these mixtures was then compared to the service life of the traditional bridge deck concrete mixture in Indiana. It was shown that for the service life model presented based on these four bridge decks, the IC HPC concretes achieved an estimated service life improvement of 3 to 4.5 times that of the conventional bridge deck concrete specified (10).

ESCSI STUDY – DETERMINATION OF TRANSPORT PROPERTIES OF LIGHTWEIGHT AGGRGATE CONCRETE FOR SERVICE LIFE MODELING

Owners and designers of many new structures currently specify a design life of 100 years or more to ensure durability and sustainability. In 2016, the Expanded Shale, Clay and Slate Institute (ESCSI) contracted with Tourney Consulting Group, LLC (TCG), Kalamazoo, MI, to conduct a study to determine the effects of lightweight coarse and fine aggregates on the transport properties and other durability related properties of concrete. Transport properties of concrete are measurements of the ability of ions and fluids to move through the material. Transport properties are used in several service life programs including STADIUM® and Life 365™.

Expanded shale, clay and slate (ESCS) lightweight (LW) coarse aggregates from ten different ESCS manufacturing plants across the United States were delivered to TCG for use in batching concrete mixtures (“sand lightweight concrete”) that were compared to a normalweight (NW) concrete with respect to transport properties. In addition, one mixture with normalweight coarse aggregate and lightweight fine aggregate (an “inverted mixture"); one mixture with lightweight coarse aggregate and lightweight fine aggregate (“all lightweight concrete”); and one mixture with normalweight aggregate with a partial replacement of normalweight sand with lightweight fine aggregate (an “internally cured mixture”) were batched and evaluated for transport properties. Each of the thirteen lightweight concrete mixtures and the normalweight control mixture used 658 pounds of Type I Portland cement per cubic yard of concrete. No supplementary cementitious materials, corrosion inhibitors, or corrosion resistant reinforcing bars were used so that the effect of lightweight aggregates alone on the transport properties could be demonstrated. The concrete mixtures were air-entrained to be representative of applications where freezing and thawing are a concern.

Table 1 – MIXTURES PRODUCED

Mix Description:	LW1			LW2							ALW	LWF	IC	C
	Ltwt C.A. Nat. C.A. Nat F.A.	Ltwt C.A. Nat. C.A. Nat F.A.	Ltwt C.A. Nat. C.A. Nat F.A.	Ltwt C.A. Nat F.A.	Ltwt C.A. Nat F.A.	Ltwt C.A. Nat F.A.	Ltwt C.A. Nat F.A.	Ltwt C.A. Nat F.A.	Ltwt C.A. Nat F.A.	Ltwt C.A. Nat F.A.	Ltwt C.A. Ltwt F.A.	Nat. C.A. Ltwt F.A.	Nat C.A. Nat F.A. Ltwt FA	Control Nat C.A. Nat F.A.
Lafarge Alpena Type I lb/yd^3	658	658	658	658	658	658	658	658	658	658	658	658	658	658
Agg.Resource Midway Pit **Natural Fine Agg** SSD lb/yd^3	1360	1342	1320	1119	1119	1074	1568	1346	990	1465	------	------	846	1294
Bay Aggregates Cedarville Pit **Limestone Coarse Agg. #67** SSD lb/yd^3	450	350	150	------	------	------	------	------	------	------	------	1800	1800	1800
Lightweight Coarse SSD lb/yd^3	500	650	862	1215	1209	1209	862	1038	1273	875	1115	------	------	------
Lightweight Fine SSD lb/yd^3	------	------	------	------	------	------	------	------	------	------	917	833	304	------
Total Water lb/yd^3	250	250	244	243	243	243	242	243	243	246	243	243	243	243
Designed Air %	6.5	6.5	6.0	7.0	7.0	7.0	6.5	6.0	6.0	6.0	6.0	6.0	6.0	6.0
Designed Plastic Density lbs/ft^3	120.5	120.4	118.9	119.7	119.5	117.8	123.3	121.7	117.2	120.1	108.7	130.9	142.6	148.0
Water/Cement Ratio	0.38	0.38	0.37	0.37	0.37	0.37	0.37	0.37	0.37	0.37	0.37	0.37	0.37	0.37
Admixtures														
BASF Master Air AE100 oz/cwt	0.15	0.2	0.2	0.2	0.2	0.2	0.2	0.2	0.3	0.3	0.2	0.2	0.4	0.5
BASF Glenuim 7500 (HRWR) oz/cwt	3.2	3.6	3.7	3.9	4.3	3.9	5.2	5.8	3.5	5.0	4.3	5.3	5.0	4.4
Physical Properties														
Slump, in.	4.00	5.00	3.50	3.00	8.75	5.00	2.75	5.25	3.00	4.00	3.00	5.00	7.50	4.00
Air % as tested (Volumetric)	6.75	8.00	7.50	7.25	6.50	6.50	7.00	6.25	6.25	7.00	6.25	6.00	7.00	7.10
Water Sat. Bulk Density lb/ft3	37.4	65.2	49.3	60.8	60.7	57.1	56.1	56.9	59.8	54.1	57.6	53.3	53.3	
Density lb/ft3 Plastic (Concrete)	120.5	123.0	118.5	119.1	122.6	122.2	125.7	123.5	121.4	120.7	109.8	133.3	141.6	146.2
Density lb/ft3 Oven Dry (Concrete)	111.9	113.8	108.9	109.2	109.8	108.2	115.7	114.0	109.1	114.1	95.6	130.1	137.2	142.1
Density lb/ft3 Equilibrium Air Dry (Concrete)	118.6	119.9	115.4	117.3	117.7	115.9	122.3	120.7	117.1	120.3	104.8	136.5	142.9	147.3
No. of Days to Reach Equilibrium (avg. 2)	112	84	84	140	140	140	112	112	112	56	140	84	84	67

Mixes:
LW1 – Average of three mixes with LW coarse aggregate with some NW coarse and all NW fine aggregate
LW2 – Average of seven mixes with LW coarse aggregate and NW fine aggregate
ALW – One mix with LW coarse aggregate and LW fine aggregate
C – One "control" mix with NW coarse aggregate and NW fine aggregate
IC – One internally cured mix with NW coarse and fine aggregates, plus LW fines
LWF – One "reverse mix" with NW coarse aggregates and LW fine aggregates

Table 2 – MIXTURE PROPERTIES

Mix Description:	LW1		LW2		ALW	LWF	IC	C
	Average	Standard Dev.	Average	Standard Dev.				
Lafarge Alpena Type I lb/yd^3	658	0	658	0	658	658	658	658
Agg.Resource Midway Pit Natural Fine Agg SSD lb/yd^3	1341	16	1240	203	------	------	846	1294
Bay Aggregates Cedarville Pit Limestone Coarse Agg. #67 SSD lb/yd^3	317	125			------	1800	1800	1800
Lightweight Coarse SSD lb/yd^3	671	149	1097	159	1115	------	------	------
Lightweight Fine SSD lb/yd^3					917	833	304	------
Total Water lb/yd^3	248	3	243	1	243	243	243	243
Designed Air %	6.33	0.24	6.50	0.46	6.0	6.0	6.0	6.0
Designed Plastic Density lbs/ft^3	119.9	0.7	119.9	2.0	108.7	130.9	142.6	148.0
Water/Cement Ratio	0.38	0.00	0.37	0.00	0.37	0.37	0.37	0.37
Admixtures								
BASF Master Air AE100 oz/cwt	0.2	0.0	0.2	0.0	0.2	0.2	0.4	0.5
BASF Glenuim 7500 (HRWR) oz/cwt	3.5	0.2	4.5	0.8	4.3	5.3	5.0	4.4
Physical Properties								
Slump, in.	4.2	0.6	4.5	2.0	3.00	5.00	7.50	4.00
Air % as tested (Volumetric)	7.4	0.5	6.7	0.4	6.25	6.00	7.00	7.10
Water Sat. Bulk Density lb/ft3	50.6	11.4	57.9	2.4	57.6	53.3	53.3	
Density lb/ft3 Plastic (Concrete)	120.7	1.8	122.2	1.9	109.8	133.3	141.6	146.2
Density lb/ft3 Oven Dry (Concrete)	111.5	2.0	111.4	2.8	95.6	130.1	137.2	142.1
Density lb/ft3 Equilibrium Air Dry (Concrete)	118.0	1.9	118.8	2.2	104.8	136.5	142.9	147.3
Compressive Strength								
1 Day Strength psi (3 each)	2870	210	3370	420	2700	3500	3570	3310
28 Day Strength psi (3 each)	5650	280	6540	540	6160	7120	6760	5470
90 Day Strength psi (3 each)	6260	410	7240	640	7140	8040	7743	5950

Table 3 – TESTS ON EACH MIXTURE PRODUCED

Tests	Per Mix	Notes
Plastic Properties (Slump, Air, Setting Time)	1	For each mix
Compressive Strength	3	1, 28, 90 days
STADIUM Transp. (IDC, MTC, ASTM C642 porosity)	2	28 and 90 days
ASTM C1760 Bulk Conductivity	2	28, 90 days
NT Build 492 Non Steady State Diffusion Coefficient	1	28 days
ASTM C1556 Bulk Diffusion	1	28 days
ASTM C1585 Capillary Absorption	1	28 and 90 days LWA
ASTM C1581 Restrained Shrinkage	1	Only for IC mix and control

All the tests listed in Table 3 were performed in the TCG lab. Using the results from these tests, a bridge deck subjected to deicing salts in Detroit, MI, was modeled using Life 365™ and STADIUM® software. The STADIUM® software results showed that the concrete bridge deck service life would be increased compared to the normalweight concrete control mixture as follows:

- By approximately 22% average for the ten mixtures with lightweight coarse aggregate and normalweight sand ("sand lightweight concrete"). It was observed, however, that the service life prediction would be increased by as much as 94% for one individual sand lightweight concrete mixture.
- By approximately 88% for mixtures with normalweight coarse aggregate and lightweight fine aggregate ("inverted mixture")
- By approximately 35% for mixtures with lightweight coarse aggregate and lightweight fine aggregate ("all lightweight concrete")
- By approximately 32% for mixtures with normalweight coarse aggregate and a partial replacement of normalweight sand with lightweight fine aggregate ("internally cured mixture")

The Life 365™ analysis showed equivalent performance between the sand lightweight mixes and the control mix. As with the STADIUM® analysis, significant improvements were shown with the lightweight fines, up to a three times improvement with lightweight fine aggregate replacing normalweight sand.

While the results of the TCG study are encouraging, other studies as mentioned in this paper have shown even greater improvements in properties related to durability for different types of lightweight and internally cured concrete. Such results would indicate even greater increases in expected service life than are presented in the findings of this study.

These service life predictions are estimates for uncracked concrete. As part of their testing program, Tourney Consulting Group also evaluated properties of lightweight concrete related to cracking potential. The addition of a small quantity of lightweight fines for internal curing was shown to reduce restrained shrinkage cracking and to increase compressive strength and service life. Tourney's findings agree with studies by others (including the previously mentioned References) that find that lightweight concrete also has reduced potential for cracking compared to the control concrete, providing further benefit for increasing the service life of concrete structures that is not considered in the Life 365™ and STADIUM® analyses . For complete information on the tests performed to determine the transport and durability properties of concrete, as well as the assumptions for the service life analyses, see the full report "Determination of Transport Properties of Lightweight Aggregate Concrete for Service Life Modeling" dated August 23, 2018, which can be downloaded from www.escsi.org.

Lightweight aggregate concrete made with ESCS has been used in concrete structures for over 100 years, demonstrating its superior durability and service life. Structural lightweight concrete has compressive strengths comparable to normalweight concrete, yet it is typically 20% to 25% lighter (and in some cases up to 33% lighter), offering design flexibility and substantial cost savings by reducing dead load, improving seismic structural response, allowing longer spans, providing better fire ratings, and by permitting thinner sections, decreased story heights, smaller size structural members, reduced reinforcing steel and lower foundation costs. These savings generally result in additional reductions of cost, energy, and emissions associated with the transportation of materials, and thus, less environmental impacts. The excellent durability performance of structural lightweight concrete and internally cured concrete is a result of a number of factors such as increased cement hydration (including supplementary cementitious materials reaction), and reduced autogenous shrinkage, early age cracking, modulus of elasticity and coefficient of thermal expansion.

REFERENCES:

1. ASCE, *2017 Infrastructure Report Card*, Retrieved from https://www.infrastructurereportcard.org/wp-content/uploads/2017/01/Bridges-Final.pdf
2. Expanded Shale, Clay, and Slate Institute, *Lightweight Concrete, History, Applications, Economics*, 7600.1, Retreived from https://www.escsi.org/wp-content/uploads/2017/10/7600.1-Lightweight-Aggregate-History.pdf
3. Expanded Shale, Clay and Slate Institute, *ESCS Lightweight Aggregate, Manufacture*, Retreived from https://www.escsi.org/escs-lwa/
4. Darwin, D., and J. Browning, 2008, *Construction of Low Cracking High Performance Concrete (LC-HPC) Bridge Decks: Field Experience,* Proceedings of the Concrete Bridge Conference, St. Louis, MO.
5. FHWA, 2008, *Cast-in-Place High Performance Concrete*, Federal Highway Administration High Performance Concrete Website, http://knowledge.fhwa.dot.gov/cops/hpcx.nsf/home?openform&Group=HPC%20Cast-in-Place%20Construction&tab=WIP, accessed 2008.
6. Byard, B. E. and Schindler, A. K., 2010, *Cracking Tendency of Lightweight Concrete*, Research Report, Highway Research Center, Auburn University.
7. Henkensiefken, R., 2008, *Internal Curing in Cementitious Systems made using Saturated Lightweight Aggregate*, Masters Thesis, Purdue University.
8. Cusson, D., Lounis, L., and Daigle, L. 2010, *Benefits of internal curing on service life and life-cycle cost of high-performance concrete bridge decks – A case study*. Cement & Concrete Composites 32 (2010) 339–350.
9. Schlitter, J., Henkensiefken, R., Castro, J., Raoufi, K., Weiss, J., and Nantung, T., 2010., *Development of Internally Cured Concrete for Increased Service Life, Final Report,* JTRP SPR-3211, Joint Transportation Research Program, Indiana Department of Transportation and School of Civil Engineering, Purdue University
10. Barrett, T., Miller, A., Zander, A., and Weiss, J., *Service Life Estimation of Commercially Produced Internally Cured, High Performance Concrete*, Indiana Department of Transportation and Lyles School of Civil Engineering, Purdue University
11. Expanded Shale Clay and Slate Institute. 2018. *Determination of Transport Properties of Lightweight Aggregate Concrete for Service Life Modeling*, Tourney Consulting Group, LLC, TCG Project Number 16059.

Exploring Polymer Concrete for Bridge Deck Closures in ABC

Islam Mantawy, Ph.D., Florida Internation.al University, (775) 537-9019, imantawy@fiu.edu
Moneeb Genedy, Ph.D, University of Texas at Austin, (512) 471-3161 mgenedy@austin.utexas.edu
Mahmoud Reda Taha, Ph.D., P.E., University of New Mexico, (505) 277-1258, mrtaha@unm.edu

ABSTRACT

Accelerated bridge construction (ABC) techniques are used worldwide to accelerate construction and reduce cost. Precast concrete bridge deck panels are used today as part of ABC to simplify bridge deck construction. When used, bridge deck closure joints are created between the precast panels, as shown in **Figure 1**. Flowable yet very strong concrete with good bond and high shear strengths, such as Ultra-high-performance concrete (UHPC), is necessary to fill the closure joints. This extended abstract examines the use of polymer concrete (PC) as an alternative material for bridge deck closures in ABC (1), as shown in **Figure 1**. PC produced using polymethyl methacrylate (PMMA) and standard aggregate was tested. The low viscosity of PMMA, ease of mixing and relatively very high workability of PMMA-PC are key features for its use for bridge deck closures. We report on test results comparing key mechanical criteria of PC and UHPC showing the superior capability of PC for bridge deck closures compared with UHPC. Development length using pull-out tests, lap splice length and shear strength tests of unreinforced PC were performed. It is demonstrated that PC has a development length of 3.6 times the reinforcing bar diameter that is less than one-half the development length of 12 times the bar diameter recommended with UHPC. PC also showed a shorter splice length for reinforcing bar compared with that reported for UHPC. Finally, unreinforced PC showed shear strength that is twice that of UHPC. It is evident that using PC in bridge deck closures in ABC can improve constructability and performance and provide cost-savings compared with UHPC.

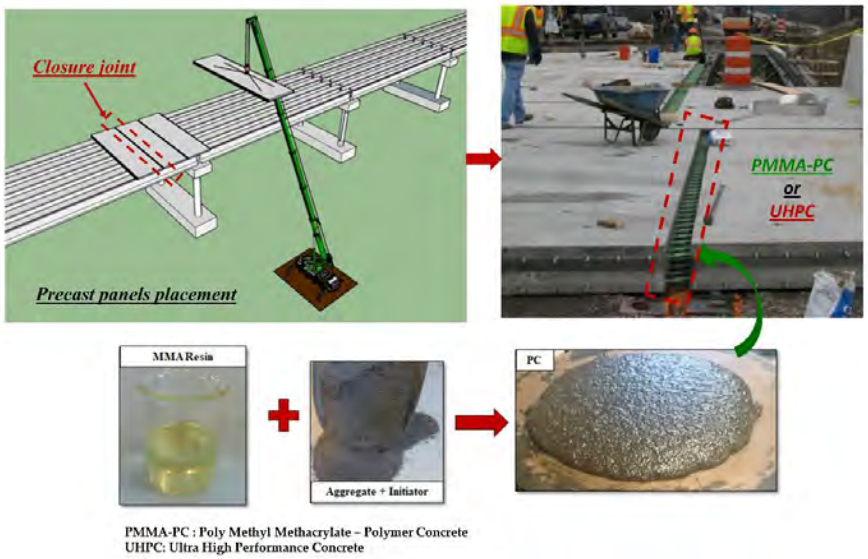

Figure 1. Graphical abstract for the proposed polymer concrete for bridge deck closure joints.

MATERIALS AND METHIODS

This extended abstract highlights the potential use of polymethyl methacrylate (PMMA) polymer concrete denoted here as PMMA-PC as a filling material for ABC closure joints. The low viscosity of PMMA, ease of mixing, and relatively high workability of PMMA-PC are key features for its use for ABC closure joints. Here, the minimum development length of steel reinforcement when spliced in PMMA-PC, lap splice length between bars inside PMMA-PC, and shear strength are determined using pull-out test, lap splice test, and shear test, respectively. Then, the test results are compared with those of UHPC reported in the literature. Mixture proportions and mechanical properties of PMMA-PC are listed in **Table 1**.

Table 1. Mixture proportions and mechanical properties of PMMA-PC

	PMMA-PC	Properties
Mixture	MMA Polymer	159.5 kg/m^3
	Aggregate	2224.6 kg/m^3
Compressive strength		72.6 ±2.1 MPa
Split tensile strength		6.6 ± 0.6 MPa

Pull-out Test

Pull-out test was conducted to determine the minimum development length required for bars sizes #13 (12.7 mm) and #16 (15.9 mm), uncoated ASTM A572 Grade 60 in PMMA-PC. Pull-out tests were conducted for a total of four embedment lengths of $4d_b$, $6d_b$, $8d_b$, and $10d_b$. Three repetitions for each embedment length were tested for each bar size (Total of 24 pull-out specimens). Pull-out specimens were tested at 7 days of age. For specimens with #13 reinforcing bars, all specimens with an embedment length of $4d_b$ failed in bond between the steel bar and PMMA-PC. For specimens with an embedment length of $6d_b$, the failure occurred either due to steel bar rupture or due to failure in bond between the steel bar and PMMA-PC after yielding of the bar. For specimens with an embedment length $8d_b$ and $10d_b$, failure in all specimens was due to steel bar rupture. **Figure 2** shows the median load-displacement curve for specimens with #13 reinforcing bars. For specimens with #16 reinforcing bars, all specimens with an embedment length of $4d_b$ failed in bond between steel rebar from PMMA-PC after yielding of the bar. For specimens with an embedment length $6d_b$, $8d_b$ and $10d_b$, failure occurred due to steel bar rupture after passing the yield strength. The development length for each bar size was calculated as 3.6 times bar diameter for bar #13 and 4.1 times bar diameter for bar #16 compared with 6 times bar diameter as reported for UHPC.

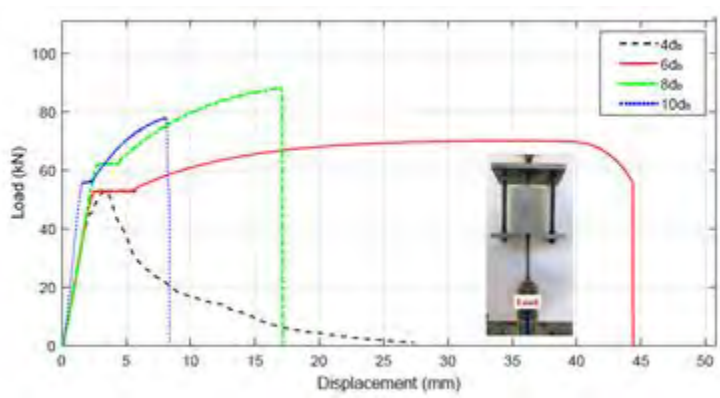

Figure 2. Median load-displacement curve for pull-out test for #13 rebar.

Lap Splice Test.

For lap splice test, a beam with a 660.4 mm span length was loaded using two-point loads at 152.4 mm spacing. The beam is 152.4 mm wide and 152.4 mm deep with a total length of 762 mm and reinforcing bar #13 with a concrete a cover of $3d_b$. The tested splice lengths ranged from $1d_b$ to $7d_b$ with $1d_b$ interval (total of 7 lap splice lengths) in addition to a control beam with straight bars

(Specimen C) and an unreinforced beam (total of 9 different details). Three repetitions were tested for each different detail (Total of 27 specimens). **Figure 3** shows the median force-displacement for splice test specimens. The minimum lap splice length required for uncoated steel bars in PMMA-PC with a concrete cover of $3d_b$ to achieve yield in the rebar was found to be $4.1d_b$. Comparing to UHPC, $4.5d_b$ (typically is taken as 75% of embedment length) is the sufficient lap splice length to observe yielding in the rebar.

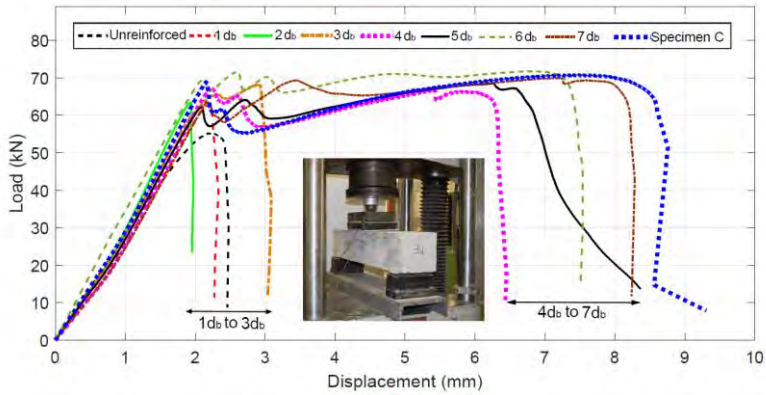

Figure 3. Median load-displacement curve lap splice length.

Shear Test.

A common practice is to use the same material for closure joints between full-depth precast deck panels and between the panels and the top of superstructure girders. Shear strength test was conducted to ensure that PMMA-PC has the necessary shear capacity to provide proper shear transfer and sufficient horizontal shear resistance at haunches between the superstructure girders and precast panels. The shear strength was determined using a 4-point test setup and using short beam specimens with a square section of 153 mm x 153 mm and a span length of 356 mm. UHPC and PMMA-PC were tested (Total of 15 specimens). PMMA-PC shear strength was measured at 7.6 MPa that is 190% and 344% higher than UHPC and normal concrete, respectively.

CONCLUSION

1- The minimum development length required for steel bars embedded in PMMA-PC was found to range between 3.6 and 4.1 times the reinforcing bar diameter. This development length is almost one-half of the minimum development length necessary for UHPC.

2- The minimum lap splice length required for uncoated reinforcing steel bars in PMMA-PC with concrete cover of 3 times the bar diameter was found to be 4.1 times the bar diameter compared with 4.5 times the bar diameter necessary for UHPC.

3- PMMA-PC has shear strength of 7.6 MPa, significantly higher than both normal concrete (+344%) and UHPC (+190%).

4- Closure joints made of PMMA-PC can offer a relatively narrower width and significant cost-savings if compared with UHPC.

REFERENCES

1. Mantawy, I.; Chennareddy, R.; Genedy, M.; Reda Taha, M.M. Polymer Concrete for Bridge Deck Closure Joints in Accelerated Bridge Construction. Infrastructures 2019, 4, 31.

Rapid Set Concrete Bridge Deck Overlays

Edward Liberati, P.E., Hydro-Technologies/Modified Concrete Suppliers, (502)693-3253,
eliberati@hughesgrp.com

ABSTRACT

Latex Modified Concrete (LMC) Overlays have been used to overlay and repair bridge decks since the 1960's. LMC was designed by the DOW Chemical company as an overlay product to repair bridge decks and to withstand the harsh environments and heavy traffic loads that bridge decks are subjected to. There is not a more proven or more widely used concrete bridge deck overlay system in the United States. LMC Overlays are a structural, long term bridge deck repair method that will add more than 25 years of maintenance free service life to a bridge deck. LMC Overlays also will waterproof and shield a bridge deck from chloride intrusion. An excellent riding surface with great skid resistance is also provided. Tens of thousands of bridge decks in just about every state have been repaired using LMC Overlays. With the introduction of Hydrodemolition Surface Preparation to replace jackhammers in the early 1980's and Very Early Strength Latex Modified Concrete (VESLMC) to reduce cure times in the early 1990's, the durations to install LMC Overlays has been significantly reduced. Entire bridge decks could now be repaired during "weekend only" closures or sections of bridge decks could be repaired during "nighttime only" closures. There is not a faster way to structurally repair a deteriorating concrete bridge deck. By using LMC Overlays to preserve bridge decks, costly and time consuming bridge deck replacements can be avoided for many years.

INTRODUCTION

On many bridges, due to high traffic volumes or long detours, it is very difficult to perform much needed long term bridge deck repairs without causing major traffic delays. Fast Track Hydrodemolition combined with VESLMC Overlays offers an owner the opportunity to repair their bridge decks during "non-peak" traffic volumes – typically during nighttime or weekend hours. Accelerated bridge deck preservation work of this type takes a great deal of planning and hourly scheduling. All work items on a weekend or overnight hourly schedule are typically critical therefore project coordination and past work experience are a necessity. States such as OH, KY, WV, PA, IN, NC, SC, AR, MO + others have all utilized VESLMC Overlays to successfully repair and preserve bridge decks cost effectively, with accelerated construction and with high quality. A detailed focus on a SCDOT weekend overlay job utilizing Fast Track Hydrodemolition and VESLMC Overlays in Columbia, SC performed in October 2019 is a focus of this paper. Appropriate specifications, construction procedures, pay items, plan details, schedules and typically liquidated damages are all important in the DOT bid package to insure highly quality overlays are installed that are completed on time. Contractors must have experienced workers, proper equipment, plenty of resources, excellent subcontractors, high quality material suppliers and a tolerance for risk in order to successfully perform these projects. The key work items included in all VESLMC bridge deck overlay projects are mechanical milling, fast track hydrodemolition, cleanup & water control and VESLMC Overlay installation.

SCDOT – Project P026813 – Three Bridge Rehabilitations, Richland, Co

The SCDOT Three Bridge Rehabilitations project involved "weekend only" concrete overlays and utilized Fast Track Hydrodemolition and VESLMC Overlays. Bridges S-1036 over SC277, US 21 over I-20 and US321 over I-20 just outside of Columbia, SC were scheduled be repaired and preserved while minimizing traffic impacts. All three bridge decks were in a very poor condition and repairs had to be done soon or the decks would need to be replaced. Archer Western was the low bidder on the project and selected Hydro-Technologies as their hydrodemolition subcontractor and Modified Concrete Suppliers as their VESLMC material supplier. Over 5,500 sy of bridge deck area had to be repaired in just 6 weekends. Lane closures were permitted from Friday 7 pm until Monday 5 am. The contractor faced heavy liquidated damages for lane closures that were in place outside of these allotted hours. By utilizing hourly scheduling, planning and

coordination, the job was completed in the allotted 6 weekends with minimal inconvenience to the traveling public. The SCDOT had developed excellent project specifications and plans for the project. Pay items were included for Deck Milling (5,582 SY), Fast Track Hydrodemolition (5,582 SY) and VESLMC Placement & Materials (302.3 CY). Quality control utilizing sampling & testing of the concrete, calibration & monitoring of the hydrodemolition equipment, sounding the deck after hydrodemolition to insure all deteriorated concrete was removed, pouring the decks during nighttime hours (low evaporation) and straight edging to check surface smoothness were all used to insure high quality, long lasting overlays. The project was a great success for the SCDOT, for the contractors, for the material suppliers and for the general traveling public. The new VESLMC Overlays on the decks will remain bonded and protect the existing concrete in the decks for 25+ years. At the end of the 25 year period, the VESLMC can be replaced with a second generation VESLMC Overlay and an additional 25 years of service life can be achieved.

US 21 over I-20 – Columbia, SC - Existing Bridge Deck in Very Poor Condition – Fast Track Hydrodemolition and VESLMC Overlays were selected by the SCDOT to structurally repair the deck for 25 + years.

Bridge Deck Surface Preparation using Fast Track Hydrodemolition

The fastest way to prepare a bridge deck for a new VESLMC Overlay is to utilize Fast Track Hydrodemolition. The bridge deck is first mechanically milled approximately 1" to 1 ½". Any existing overlay material on the deck should be removed with this operation. Scarification will open the pours in the concrete and expose the cracks in the structural slab for the water jet to attack. Proper milling equipment should be used for this operation to insure uniform removals and to not overload or damage the structure. The milling drum cannot ever contact or damage the top matt of reinforcing steel in the deck. Hydrodemolition will not damage the reinforcing steel. After the milling operation is complete, the deck should be cleaned and inspected for full depth cracks, for potential full depth removal areas and for any visual problems. Any necessary slab repairs should be addressed prior to the hydrodemolition operation. Before starting the hydrodemolition, the equipment should be calibrated on the existing deck concrete to determine the required flow rate, pressure, machine step, nozzle type, nozzle size and nozzle travel speed. By utilizing a trial process, the optimum hydrodemolition settings are determined so that all deteriorated concrete will be

removed with one pass of the hydrodemolition robot and a rough, highly bondable surface in the existing concrete deck is achieved. Unnecessary removal of sound concrete shall be avoided. The approved settings are locked in and then production hydrodemolition can begin. The robot then performs hydrodemolition over the entire total surface of the bridge deck. Production rates of 100 sy/hr can be achieved when utilizing Fast Track Hydrodemolition. The cut shall be checked periodically to insure that the desired results are being achieved. Upon completion of the hydrodemolition surface preparation, the deck is cleaned and washed simultaneously utilizing a specialized vacuum truck. Lightweight jackhammering (35# max) is required in areas where the milling and hydrodemolition equipment cannot access. The entire deck is sounded to insure that all deteriorated concrete has been removed from the deck. It should be noted that all hydrodemolition equipment is not equal. The recommended hydrodemolition settings for selective removal of deteriorated concrete to occur are pressure = 13,000 to 20,000 psi, flow rate = greater than 55 gal/min, the water jet hits the surface on an angle (avoids rebar shadowing) vs perpendicular and a direct impact/oscillating nozzle is used. The use of high pressure / low water volume equipment that contacts the surface with a spinning head perpendicular to the bridge deck surface should be avoided for bridge deck hydrodemolition because all deteriorated concrete will not be removed. Hydrodemolition equipment of this type is typically used for membrane removals, rubber removals from airport runaways or paint stripe removals. This equipment is designed to not damage the existing concrete below. An understanding of the equipment being used is very important to any hydrodemolition project. The correct equipment must always be used or poor results will occur.

Hydrodemolition Robot performing Bridge Deck Surface Preparation on a weekend project next to live traffic

Very Early Strength Latex Modified Concrete

VESLMC is produced in mobile volumetric mixers on site at the time of the bridge deck overlay pour.

VESLMC consists of the following mix design:

- Fine Aggregate (Sand) - 1575 - 1855 lbs/cy
- Course Aggregate (# 8's) - 1106 - 1386 lbs/cy
- Rapid Set Cement (7 bags) - 658 lbs/cy
- Latex Emulsion - 24.5 gal/cy
- Water - 17.5 gal/cy - .45 w/c ratio
- Maximum Air - 7 %
- Slump - 6 to 10 in

The addition of the 24.5 gal/cy of Latex Emulsion (styrene butadiene) is what makes it a modified concrete. Using CTL Rapid Set Hydraulic Cement is what makes VESLMC an Accelerated Strength Concrete. ½" size max course aggregates are used because the material is placed at a minimum 1 ½" thickness. The smaller aggregates are ideal for this application. VESLMC has increased durability, flexibility, and bondability, when compared to conventional Portland cement concrete mixes. VESLMC is traffic ready at 2500 psi after a 3 hour wet cure. It will achieve over 6000 psi in 28 days. The cost average for VESLMC is $1000/cy. This is significantly cheaper than Ultra High Performance Concrete = $5,000/cy or Polyester Polymer Concrete = $3,000/cy. Thousands of bridge decks have been repaired with VESLMC Overlays when long term, structural bridge deck repairs had to be done fast.

VESLMC being finished on a Fast Track Hydrodemolition Prepared Surface

VESLMC being placed on a Fast Track Hydrodemolition Prepared Surface

CONCLUSION

VESLMC Overlays are a dense concrete overlay system. They provide long term structural bridge deck repairs. VESLMC Overlays should never be compared or deemed equal to Epoxy Overlays, Polyester Polymer Concrete Overlays or Asphalt Overlays. These bridge deck overlay systems are temporary waterproofing overlays and do not add durability or strength to a deteriorating bridge deck. These overlay systems should only be used if the bridge deck NBI Rating is 6 or higher. The use of VESLMC Overlays offers a much wider application range. There are four applications for VESLMC Overlays. 1.) VESLMC Overlays can be used on new bridge decks to provide and immediate protective riding surface for the bridge deck that will prevent chloride intrusion. 2.) VESLMC Overlays can be used to preserve and waterproof a deck that has only initial forms of deterioration. These might be bridges that have NBI bridge deck ratings in the 6 or 7 range, meaning it is a sound deck. Hydrodemolition surface preparation is not required on these bridge decks. 3.) The most commonly used application for VESLMC Overlays is on bridge decks that are experiencing more significant deterioration and are in need of a more thorough deck surface rehabilitation. These decks are likely in an NBI condition 5 status or in some cases a 4, meaning the deck is still fair or just getting to a poor condition. The entire top surface of these decks are prepared utilizing fast track hydrodemolition. 4.) The fourth application is to replace a previously installed VESLMC Overlay that is nearing the end of its service life. This is known as a “second generation overlay”. The failing overlay is removed using mechanical milling, the surface is prepared using Fast Track Hydrodemolition and the second generation VESLMC Overlay is installed. VESLMC overlays have been used during all stages of a bridge decks life span.

PRACTICAL GUIDANCE FOR DESIGNING LIGHTWEIGHT CONCRETE BRIDGES – THE FHWA *LIGHTWEIGHT CONCRETE DESIGN PRIMER*

Reid Castrodale, PhD, PE, Expanded Shale Clay and Slate Inst., (704)904-7999, rcastrodale@escsi.org
Andrew Foden, PhD, PE, WSP, (609)512-3589, andy.foden@wsp.com

INTRODUCTION

Lightweight concrete has the obvious benefit of reducing the weight of large precast elements often used for ABC projects. This can save project costs by reducing the equipment requirements for handling, transporting and erecting the elements. Lightweight concrete has also been used to allow the use of fewer, larger elements to avoid joints in a structure, to allow reuse of existing substructure elements, to avoid driving additional piling, to allow widening of bridges without modification of the substructure or superstructure, and to reduce the mass of a bridge on a seismic site. It has also been demonstrated both in laboratories and through field experience that lightweight concrete has durability equal to or greater than conventional concrete of the same quality. While some engineers are not familiar with lightweight concrete, it is not a new material – it has been available commercially in the US since 1920, and has been used in bridges such as the upper deck of the San Francisco Oakland Bay Bridge, which was constructed in 1936 using 95 pcf lightweight concrete, that is still in service today.

However, many engineers are reluctant to use lightweight concrete in their bridge designs because they are not familiar with the material and how to use it. Others have attempted to use lightweight concrete in past projects but had found that the requirements for lightweight concrete in the *AASHTO LRFD Bridge Design Specifications* made the use of the material more costly and less efficient. Therefore, they gave up trying to consider it in their projects.

This paper introduces a *Lightweight Concrete Design Primer* that is being developed for FHWA to address these issues by gathering the information needed for design of lightweight concrete bridges into a single concise document.

DOCUMENT BACKGROUND

A process to produce structural lightweight aggregate by expanding slate, clay, and shale at high temperatures using a rotary kiln was patented in 1918. Use of the material began immediately but increased significantly when the patent expired in the 1950s. At that time, the Expanded Shale, Clay and Slate Institute (ESCSI) was formed, which pursued the development and marketing of lightweight aggregate in the US. Rapid growth in the use of lightweight concrete continued until the mid-1970s when the cost to produce lightweight aggregate increased because of increased fuel prices caused by the fuel crisis and increased production costs due to the introduction of pollution controls. With increased costs, the industry contracted, resulting in the curtailing of development and promotional efforts.

In the early 2000s, FHWA recognized that lightweight concrete had potential for improving the economy and performance of bridges but was being under-utilized. Additional information needed in marketplace to encourage its use, including research to answer several questions, such as the performance of “specified density” concrete in range between lightweight and normal weight concrete.

In 2005, the Federal SAFETEA-LU legislation included funds for FHWA to use for research on high performance concrete (HPC). These funds were directed to studying lightweight concrete at FHWA’s Turner Fairbank Highway Research Center. These efforts were coordinated with NCHRP Project 18-15 titled “High-Performance/High-Strength Lightweight Concrete for Bridge Girders and Decks” which resulted in Report 733 (2013).

Using the results of the two research efforts and earlier work, FHWA spearheaded development of revisions to the LRFD Specifications that were adopted by AASHTO. In 2014, a new equation for the modulus of elasticity was adopted by AASHTO that provided better results for lightweight and high strength concretes. This change was followed by a much broader revision of the specifications that was adopted in 2015, which included a new definition for lightweight concrete, introduction of the concrete density modification factor, λ, and insertion of λ into equations where appropriate.

However, it still appeared that the marketplace needed more information about design of lightweight concrete bridges to encourage wider use of the material. Designers and owners did not seem comfortable with using lightweight concrete, and some misconceptions about lightweight concrete existed.

Therefore, a lightweight concrete design primer was identified as a product that would be useful to advance the use of lightweight for bridge design. It was envisioned that the document would provide a concise summary of the full range of information needed to design a lightweight concrete bridge. The document would also highlight benefits of lightweight concrete in various applications and cover primary design and construction subject areas needed to design lightweight concrete highway structures. It would also identify and describe recent changes in the *AASHTO LRFD Bridge Design Specifications* related to lightweight concrete as well as providing guidance on using lightweight aggregate for internal curing. A webinar and seminar based on the completed primer would also be developed and presented.

DOCUMENT DEVELOPMENT AND CONTENTS

Development of the primer has begun. A preliminary draft was completed and reviewed by FHWA. A final draft is currently in review. It had been hoped that the work would have progressed farther by the time of the conference. Therefore, this presentation is based on the unreviewed draft, so the information presented is still preliminary. Since the primer is intended to be a “concise” document, it will not be comprehensive, but will cover necessary topics.

The current table of contents is:

1. Introduction
2. Properties of Lightweight Aggregate and Lightweight Concrete
3. Initial Design Considerations
4. Design for Lightweight Concrete using LRFD Specifications
5. Construction Considerations
6. Specifying Lightweight Concrete
7. Project Examples
8. Cited References

Chapter 1 provides a definition of lightweight concrete and points out that it is not a new material. Lightweight concrete has been mentioned in the AASHTO design specifications since at least 1969. A detailed FHWA report on lightweight concrete for bridges was developed by TY Lin International and was published in 1985 that pointed out that the material had a “sufficient record of successful applications to make it a suitable construction material … for bridges” and that “sufficient information is available on all aspects of its performance for design and construction purposes.” This chapter discusses briefly some advantages and perceived disadvantages of lightweight concrete, followed by three examples of projects that have used lightweight concrete.

Chapter 2 provides data on material and durability properties of both lightweight aggregate and lightweight concrete, along with properties used for seismic applications and service life estimation. The concept of internal curing, which uses the increased absorption of lightweight aggregate to deliver curing water to the interior of concrete elements, is introduced.

Chapter 3 discusses in greater detail the reasons for which the use of lightweight concrete in bridges should be considered, such as reduced weight and enhanced durability. The types of elements for which lightweight concrete is typically used is also discussed. The chapter provides guidance on the selection of material properties for lightweight concrete for use in design, considerations for estimating the cost of

lightweight concrete, and design considerations for different elements and structure types. Much of this guidance has not been readily available in the past.

Chapter 4 presents the major recent changes in the LRFD Specifications related to lightweight concrete. The document then provides discussion of each article in the design specifications that address the use of lightweight concrete, or where it is significant that lightweight is not mentioned. During development of the primer, items were identified that may need to be considered for future revisions. These items are noted as they are presented in the chapter.

Chapter 5 discusses a wide range of construction topics that should be considered, or that the designer should be aware of, when using lightweight concrete in the design of a bridge. These topics include quality control, proportioning of mixtures, prewetting lightweight aggregate, batching, placing, finishing, curing, grinding and grooving, and heat of hydration.

Chapter 6 provides guidance in topics that should be considered when specifying lightweight concrete for a structure, such as concrete density, material properties, test methods, construction specifications, and topics particular to Internal curing.

Chapter 7 gives information for a limited list of bridges for which lightweight concrete has been successfully used. Many more bridges could have been included; references are mentioned which given further examples. Examples are included to give designers ideas about the range of potential types of applications in brides, and to give examples where lightweight concrete provided an economical solution. The list provided includes a wide range of bridge projects that are large and small, new and old, and include decks to pretensioned girders, and segmental box girders to suspension bridges. It is noted that the longest single-piece pretensioned girder fabricated in the US (223 ft plus skews) required lightweight concrete for shipping, and the three longest-span concrete segmental box girder bridges erected using balanced-cantilever construction in the world all use lightweight concrete in their main spans to achieve the record span lengths, the longest of which is 987 ft.

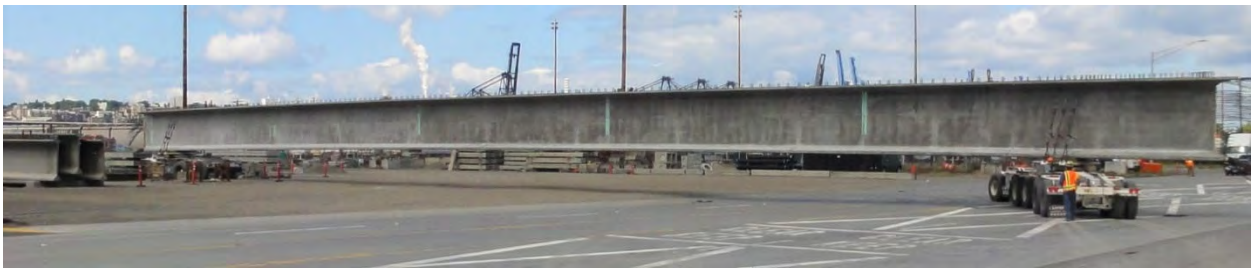

Longest single-piece pretensioned precast concrete girder in the US, which required lightweight concrete to reduce the girder weight for transportation to the project site. The girder is 223 ft long at the centerline, but is heavily skewed so it is 230 ft long from end to end. Photo: Concrete Technology Corp.

Chapter 8 provides over 160 references that allow readers to obtain more information on material properties, projects, and other topics related to lightweight concrete and internal curing if needed.

It is anticipated that the primer will be published in 2020, followed by a webinar and seminar that will summarize the content of the primer.