Report

PCI

PCI Precast/Prestressed Concrete Institute

State-of-the-Art Report on Full-Depth Precast Concrete Bridge Deck Panels

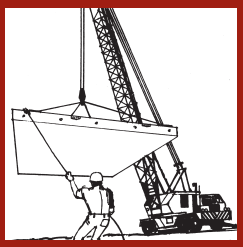

Prepared by the
PCI Committee on Bridges
and the PCI Bridge Producers
Committee

Under the direction of the
Sub-committee for the
State-Of-The-Art Report on
Full-Depth Precast Concrete
Bridge Deck Panels

Co-sponsored by: U.S. Department of Transportation Federal Highway Administration

First Edition

SOA-01-1911

STATE-OF-THE-ART REPORT ON FULL-DEPTH PRECAST CONCRETE BRIDGE DECK PANELS

With the sponsorship of
PCI Committee on Bridges and the PCI Bridge Producers Committee
(Technical Activities Council)

Under the direction of the sub-committee for the
State-Of-The-Art Report on Full-Depth Precast Concrete Bridge Deck Panels

Joseph L. Rose, Chair
Carin Roberts-Wollmann, Vice Chair

Mohammad Alhassan
Sameh S. Badie
Shrinivas B. Bhide
Heinrich O. Bonstedt
Dale C. Buckner
Vincent Campbell
James W. Carter III
Reid W. Castrodale
John S. Dick
Hussam "Sam" Fallaha
Lyman D. Feemon
Barry E. Fleck
Ken Fleck
Amgad Fawzy Girgis
Chris Hill
Mohsen Issa
Fouad Jaber
Troy Jenkins
Bijan Khaleghi
Mark Lafferty
John S. Liles
Richard P. Martel
Claude S. Napier, Jr.
Michael G. Oliva
Jerry Potter
Chuck Prussack
Gary E. Pueschel
Hameed Shabila
Michael M. Sprinkel
Maher K. Tadros
Don Theobald
Julius F.J. Volgyi, Jr.

Those who served as authors and reviewers of the report through numerous stages of development were:

James W. Carter III, Chair

Sameh S.Badie
Shrinivas B. Bhide
Reid W. Castrodale
John S. Dick
Mohsen Issa
John S. Liles
Claude S. Napier, Jr.
Gary E. Pueschel
Carin Roberts-Wollmann
Joseph L. Rose
Michael M. Sprinkel
Maher K. Tadros

Corresponding Members

Farhad Ansari
Millard Barney
Michael Brown
Barry Bryant
Michael Campion
George Colgrove
Tommy Cousins
Michael Culmo
Rodney T. Davis
John E. Dobbs
Alvin C. Ericson
Jim Fabinski
Skip Francies
Benjamin Graybeal
Charles D. Newhouse
Edward J. Gregory
Joseph L. Hartman
Eddie He
Susan E. Hida
Mark B. Hoover
Michael Hyzak
Moussa A. Issa
Steven Iszauk
Keith Kaufman
Andrew J. Keenan
Chad Keller
Manuel Linares
Scott Markowski
Michael Means
Mary Lou Ralls Newman
Larry Norton
Richard Potts
Basile G. Rabbat
Loren R. Risch
Joe Roche
Randy Romani
Chad A. Saunders
Andrea Schokker
Eric P. Steinberg
Chris Waldron
Gary Wilson
Dick Wells
Gregor Wollmann

Several others that deserve special recognition for their contributions include: Vince Campbell for his vision to create a document on this topic; Nghi Nguyen, Parul Patel, and Sameh S. Badie who helped with the example in Appendix D and Kromel Hanna who assisted the technical editor to create the final publication.

PCI Staff Liaison to the Committee
John S. Dick

Technical Editor
Helmuth Wilden

Managing Director, PCI Transportation Systems
William N. Nickas

Copyright 2011, Precast/Prestressed Concrete Institute
All Rights Reserved

ISBN 978-0-9846705-1-2

SOA-01-1911

TABLE OF CONTENTS

LIST OF TABLES

LIST OF FIGURES

FOREWORD

Full-depth precast concrete bridge deck panels are a practical alternative to cast-in-place (CIP) concrete bridge decks in many situations. This system promotes shorter construction times for new and refurbished bridge projects. The cost effectiveness of precasting increases with the length of the bridge and the number of panels needed and the benefits increase with the traffic volume using the bridge, because the accelerated construction provides open travel lanes much faster than cast-in-place construction, thus reducing the impact of construction on the traveling public.

The precast concrete deck panel system is providing the industry with a new solution that is shortening construction time while raising the standard for quality, modernization, and long term durability.

This report consists of four chapters. The complete report with the appendices provides state-of-the-art guidance relative to selecting, designing, detailing, and constructing precast full-depth decks for bridge construction. The information is applicable for new bridge deck construction or bridge deck replacement.

Chapter 1 is intended to provide an introduction to the relatively new technology of a full-depth precast bridge deck panel system. It describes the system and shows the advantages of this system over the traditional CIP bridge deck systems.

Chapter 2 provides typical practice for design including transverse and longitudinal design along with design examples. Specifics include design thickness, transverse and longitudinal reinforcement, overhang design, impact to barrier, panel-to-girder connection, and longitudinal post-tensioning.

Chapter 3 provides examples of successful detailing including transverse joints, horizontal shear connections, leveling and temporary supports, and haunch details between the beams and deck.

Chapter 4 provides information on the production, handling, and construction of full-depth precast deck panels. This includes quality control, construction operations, and wearing and protection systems.

CHAPTER 1 – INTRODUCTION TO THE TECHNOLOGY

1.1 INTRODUCTION

This is the first of four chapters of an expanded state-of-the-art report developed to provide guidance in selecting, designing, detailing, and constructing full-depth precast bridge deck panels for new or replacement bridge decks. The four chapters are compatible and combined with appropriate appendices to provide complete guidance for owners, designers, and contractors for all aspects of full-depth precast bridge deck construction.

To satisfy the public's transportation demands, highways and bridges must be more durable and must use rapid construction with minimal impact to travelers. The public is frustrated with delays due to traffic congestion in construction zones. In order to improve this situation, project construction must be accelerated to minimize these delays and safety concerns for the traveling public, or highway projects must be constructed during non-peak traffic periods. The public's demand is equally applicable to new construction as rehabilitation and reconstruction.

Many bridge deck replacement projects using full-depth precast bridge decks have demonstrated significant reductions in construction time and effects on traffic flow, as well as good performance. The use of precast bridge decks dates back to the early 1960s and the system has been used successfully for several projects in more than 20 states. However, precast decks still remain a small percentage of all bridge decks constructed when compared to cast-in-place (CIP) deck construction. Some reasons for use of CIP construction over precast construction are initial costs, lack of knowledge by designers, variable detailing, project specific details, small deck areas, concerns about long-term bridge deck performance, unlimited construction time, contractor familiarity with CIP construction, and a lack of familiarity with post-tensioning systems and installation.

With the public's demands for reduced construction time and traveling delays, as well as improved worker and traveler safety through construction zones, precast bridge decks should become more widely used and become the standard construction method for bridge decks. To promote wider use of full-depth precast decks, substantial attempts have been made over the last few years to develop uniformity in details and improvement in performance. Considerable effort is ongoing through various committee activities, research, and day-to-day experience to continually improve the cost effectiveness, constructability, quality, durability, and performance of precast concrete bridge decks. Some of these activities include the PCI Full-Depth Deck Panel Committee (a subcommittee of the PCI Bridge Producers Committee), the National Cooperative Highway Research Program (NCHRP) 12-65 Project, "Full-Depth, Precast-Concrete Bridge Deck Panel Systems,"[1] and 10-71 Project, "Cast-in-Place Reinforced Concrete Connections for Precast Deck Systems," and the PCI New England Region committees.

1.2 SYSTEM DESCRIPTION

A full-depth precast deck employs a series of precast concrete panels that are full-depth in thickness—as required by structural design—with the length and width determined by specific bridge geometry. The length of a panel along the roadway is approximately 8 to 12 ft. The width of a panel is typically equal to the full width of the bridge. Both the length and width are

determined on a basis of handling and transportation. Note that the terms length and width relate to the completed bridge where the length is in the direction of vehicular travel (typically the short dimension of the panels) and width is the width of the bridge (typically the long dimension of the panels). Generally, speed and economy are achieved with use of the least number of panels. For bridges wider than 50 ft, panels designed for half the bridge width should be considered. Also, for bridge replacement projects with construction phasing requirements, partial panel widths are used. Panels span between the supporting girders and are designed as reinforced or prestressed concrete using pretensioning or post-tensioning. The general preference of precasters/ contractors is to use pretensioned, prestressed concrete to eliminate possible cracking from handling and shipping. See **Figure 1.2-1** for typical layouts of a precast deck. Other details for full-depth precast deck panels are available in reference 2. Also, other layouts and details for full-depth precast deck panels will be provided in the other three chapters and appendices to this document.

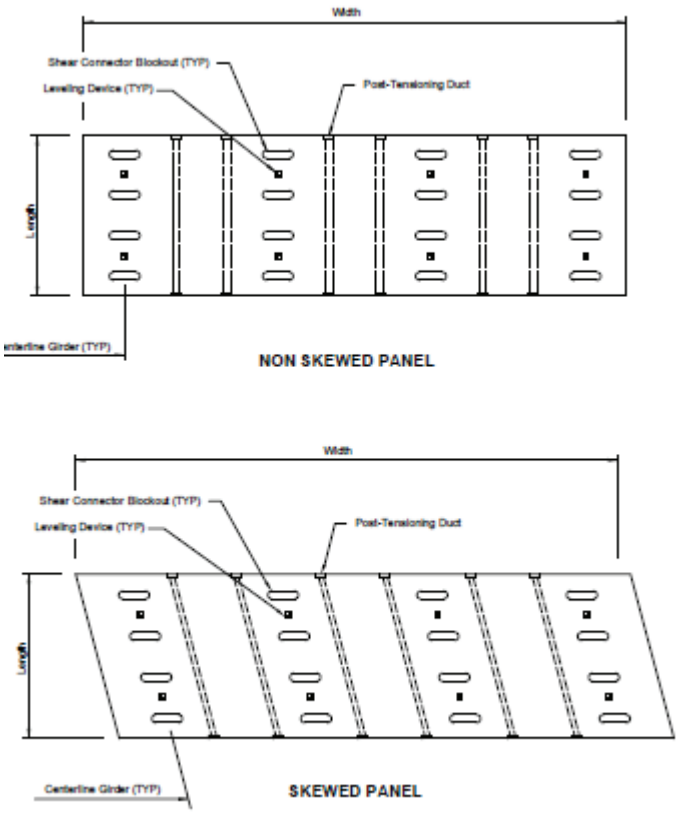

Figure 1.2-1. Typical plans for non-skewed and skewed panels.

Full-depth precast bridge deck systems consist of the following:

- Precast panels with pockets or block-outs to accommodate the shear connections to the girders
- Grout between the supporting girders and the precast panels
- Temporary supports and forms along the girders to retain the grout
- Transverse joints between the precast panels and grout to fill these joints
- Some type of overlay may be used to improve pavement rideability. Longitudinal post-tensioning is typically included in the system to tie the panels together; however, systems without post-tensioning have been used and new non-post-tensioned joints are being developed as part of NCHRP 12-65.[1]

The panels can be designed as composite or non-composite with the supporting girders. A non-composite panel is less complicated and less costly to fabricate. Elimination of the shear connectors simplifies forming the panel and reduces work during post-tensioning operations. This, however, requires that relatively large girders be used to carry traffic loads without aid from the deck as in composite systems. The more common composite system is structurally and economically more effective.

1.3 System Benefits

The benefits of precast full-depth deck systems are described below and include improved quality, reduced construction time and impact on traveling public, possible superstructure weight reduction, and reduction of life-cycle cost.

1.3.1 Quality

The quality of precast deck systems is superior to cast-in-place concrete bridge decks because production occurs in a controlled plant environment. The variability of construction due to environmental conditions is eliminated in a plant that uses consistent casting operations and curing techniques. Also, CIP decks are more susceptible to cracking than precast decks. When concrete is placed over relatively stiff girders, it becomes part of the girder/deck composite system as soon as it begins to cure several hours after placement. At that time, its tensile capacity is low. Shrinkage in the first few hours after setting and the temperature drop as the heat of cement hydration dissipates causes a reduction in concrete volume that is restrained by the supporting girders. This often results in cracking, especially in the transverse direction, that continues to develop with the concrete shrinkage. Most of the shrinkage occurs in the first 60 days after casting. Shrinkage cracking can be reduced or eliminated by using precast deck panels that have cured in an unrestrained condition in a precast plant.

High-performance concrete (HPC) is recommended for all bridge decks due to its superior durability in severe environmental conditions. Plant production provides greater assurance that the performance characteristics of HPC will be achieved. 8 ksi concrete panels are easily produced in precast plants, while it is difficult to consistently produce a conventional cast-in-place concrete deck at strengths higher than 5 ksi. More important than strength in bridge decks, shrinkage and the associated cracking are better controlled by plant-production. A two-way pre-compressed concrete deck is expected to be crack-free for the service life of the bridge, an advantage that is not practical to achieve on cast-in-place decks.

1.3.2 Reduced Construction Time and Impact on Traffic

Many projects constructed using full-depth precast deck panels have demonstrated a significant reduction in construction time, thereby reducing the impact on the traveling public. The construction time reduction has been documented to be from 50 to 75%[3,4] of the time required for cast-in-place bridge deck construction. This demonstrated savings in construction time meets the public's demand for faster construction and fewer traffic delays. The reduced construction time also reduces the safety hazards to motorists and workers by minimizing the total time they are exposed to the work zone. This provides greater flexibility in establishing the project schedule and allows the contractor to concentrate on other critical path items.

Full-depth precast deck systems have also alleviated construction restrictions on peak-traffic flows for projects in high-traffic urban locations. These deck systems allow replacement of bridge decks during non-peak traffic, leaving the full roadway open for peak traffic. This can be accomplished with night-only construction, weekend-only construction, or other non-peak traffic period construction.

Two very successful projects that demonstrate both a reduction in construction time and minimal impact on peak traffic are the Woodrow Wilson Bridge re-decking (I-95/495 over the Potomac River near Washington, D.C.) completed in 1983, and the Broad Run and Turkey Run Bridges on the George Washington Memorial Parkway near Washington, D.C. in 1998. Both of these projects are on critical commuting routes in the Washington, D.C. metropolitan area and were completed without significant impact on peak-traffic flow. The Woodrow Wilson Bridge construction was completed with night-only work and the Broad Run and Turkey Run Bridge construction was completed on weekends only. The roadways for both projects were available for peak hour traffic for each day of the work week during the entire construction period. Even with the restricted work period, both projects were completed with reduced total construction time.

1.3.3 Weight Reduction

Reducing the weight of the full-depth precast concrete deck panels can provide significant benefits. The weight reduction can be accomplished by implementing one or more of the following strategies:

- reduced deck thickness by using a higher concrete strength and/or prestressing
- use of lightweight concrete
- tighter control of construction tolerances in plant-cast panels

The dead load of the deck is a significant portion of the design load for a bridge, especially for longer span structures. Therefore, reducing the deck weight can be beneficial in several ways, including:

- improved structural efficiency for new designs, such as increased span lengths or increased girder spacing
- improved bridge load ratings when used for deck replacement on an existing structure
- increased traffic capacity on an existing structure by increasing the number or width of lanes when the deck is replaced without requiring significant structural improvements to the superstructure or substructure
- reduced seismic loads
- reduced substructure and foundation loads

Furthermore, since the full-depth deck panels are precast and must be handled at the precast plant, transported to the bridge site, and finally erected on the bridge, lighter panels will reduce costs associated with these activities. Therefore, the designer should consider options for reducing the weight of precast full-depth deck panels in order to maximize the efficiency and minimize the cost of construction.

1.3.3.1 Lightweight Concrete

Lightweight concrete has been used for the deck on a number of bridge rehabilitation projects as well as on new construction. For deck applications, the density of the concrete is usually reduced to approximately 120 lb/ft^3 by replacing the normal weight coarse aggregate in the concrete with manufactured structural lightweight aggregate. The reduced density is accompanied by a reduced stiffness (modulus of elasticity) and tensile capacity. These parameters are addressed in the *LRFD Specifications*.[5]

Lightweight concrete can be used to reduce the weight of full-depth precast deck panels, as outlined in Section 1.3.3. Decreasing the weight of deck panels reduces handling and transportation costs and improves structural efficiency of the entire structure. The use of a lightweight concrete deck has made it possible to increase the roadway width on several bridge rehabilitation projects with little or no strengthening of the superstructure or substructure. Two prominent examples of this type of project are the Whitehurst Freeway (for which a cast-in-place deck was used)[6] and the Woodrow Wilson Bridge,[7,8] both of which are in the Washington, D.C., area. A brief description of the deck replacement for the Woodrow Wilson Bridge, which was completed in 1983 using lightweight concrete for the precast full-depth deck panels, appears in Appendix C.

Additionally, many lightweight concretes can provide enhanced durability for concrete bridge decks.[9] This can be attributed to improved bond between lightweight aggregate and paste, uniform stiffness of the aggregate and paste, reduced stiffness of the concrete, and internal curing. All of these factors contribute to reduced micro-cracking between the aggregate and paste, which reduces the permeability of the concrete, and therefore increases durability.

Lightweight aggregate costs more than normal weight aggregate because it is processed at high temperatures and transported from a limited number of manufacturing locations. However, in projects where lightweight concrete has been used, the benefits have more than offset the increase in cost. While lightweight concrete typically costs more than normal weight concrete, this increase may be small when compared to the cost of the overall project. For example in Virginia, a cost premium of $20 per cubic yard of lightweight concrete results in the cost increase of about 50 cents per ft^2 for an 8 in. thick deck, which is generally a small fraction of the overall project cost. This simple cost comparison does not account for the potential cost benefits from the reduced dead load of the structure and reduced shipping and handling costs.[9]

1.3.4 Economy

The initial cost of a bridge deck using precast full-depth concrete panels is typically higher than a CIP deck. This difference is due to the current limited use and popularity of precast full-depth decks. This cost is expected to be lower with greater use, consistent details, and uniform design.

When the road user and traffic maintenance costs are considered in the evaluation of viable systems, the total cost of the full-depth precast deck system is significantly below the CIP deck system. It has been reported that traffic maintenance costs are approximately 30 to 50% of the project construction cost.[10] Several completed projects demonstrate the benefits to the contractor

of precast deck systems for projects that include incentive and penalty clauses or a time constraint.

The cost of a precast deck varies widely based on geographic location. This is due to material costs, transportation, and labor, among other things. For example, a typical precast deck system in Virginia costs \$52 per ft^2, while a typical precast deck system in Nebraska costs \$28 per ft^2. The average cost of a conventional CIP bridge deck in Nebraska is \$20. The initial cost premium is outweighed by bridge deck quality, deck life, traffic control, and maintenance costs.

1.4 Examples of Successful Projects

The successful use of full-depth precast concrete panels is well documented in various research and project reports, included in Appendix C of this document. A project list where deck systems have been used is also included in Appendix C.

CHAPTER 2 – DECK PANEL DESIGN

2.1 INTRODUCTION

The proper design and specifications for full-depth precast, prestressed concrete bridge deck systems are important for its successful construction. The design of the system must be based on detailed evaluations of its components, particularly the joints between adjacent precast panels, the connection between the slab and the supporting system, and adequacy of prestressing force provided to secure the integrity of the transverse joints if post-tensioning is used. A well-designed system provides a very effective and economical design concept that can be implemented for the rehabilitation of existing highway bridges, as well as new bridge construction, in order to shorten construction time and duration of bridge closures, and to minimize interference with traffic flow.

This system uses high-performance concrete to produce durable deck panels that are effective in aggressive environments. The panels are connected to the steel stringers or precast, prestressed concrete girders through shear pockets to provide composite action. The precast deck panels can be constructed with or without prestressing, depending on the width of the bridge and staged construction procedures.

The transverse keyway joint is the structural element of a bridge that connects the edges of the full-depth precast concrete panels. When the wheel load of a vehicle crosses the transverse joint, the joint is subjected primarily to flexure and vertical shear. These load effects can generate cracks that allow infiltration of water with chloride ions, which is the major factor in the corrosion of steel reinforcement. Some of the materials that can be used to fill the joints are non-shrink cementitious grout, magnesium phosphate grout, and polymer concrete. Joints will crack if the grouting material is not strong enough to resist the applied shear and flexural effects. An investigation of various non post-tensioned joints in bridges revealed that many of the transverse joints exhibited leakage and vertical misalignment.[11] These leaking joints allow penetration of foreign materials and gradually make the joint vulnerable to damage and expensive to repair.

The major parameters to be defined in the design and construction of full-depth precast panels are as follows:

- Precast panel dimensions and configuration; i.e. straight (non-skewed vs. skewed)
- Shear pocket dimensions, spacing, and number and size of shear connectors that are required to achieve full composite action between the precast panels and the supporting system
- Type and configuration of the joint between adjacent precast slabs (female-to-female type of joint vs. male-to-female match-cast)
- Type of grout materials within the joint and the shear pockets (cementitious or epoxy materials)
- Mild reinforcement design and details
- Amount of prestressing force that is needed longitudinally to secure the integrity of the joints, and transversely to account for handling and erection stresses, if prestressing is used
- Type of overlay materials, if used
- Parapets and parapet connections
- Concrete mix design

In the past, many states have experimented with precast concrete slabs for deck replacements with a wide variety of design and construction methods. The first trials were started in the early 1970s in New York, Alabama, and Indiana. Since the mid 1970s many projects have been built. These bridges included many spans that were composite and some involved complex geometries. Major structures were constructed nationwide by the New York State Thruway Authority, Pennsylvania Turnpike Commission, Massachusetts Turnpike Authority, New York State DOT, California DOT, Maryland State Highway Administration, Federal Highway Administration, Delaware River Joint Toll Bridge Commission, Pennsylvania DOT, Connecticut DOT, Virginia DOT, Iowa DOT, Alaska DOT and Public Facilities, Ohio DOT, Illinois DOT, and Nebraska DOR.

Review of this inventory of projects revealed some critical factors contributing to the reduced performance of these bridge decks:

- Debonding and leakage through the panel-to-panel joints that lead to severe corrosion due to lack of post-tensioning in the longitudinal direction, inadequate material in the joint, inadequate configuration of the joint, and inadequate surface preparation of the joint
- Loss of full composite action between precast slabs and the supporting system due to lack of haunch, inadequate design and distribution of shear connectors, and inadequate materials in shear pockets
- Failure of the overlay system

Measures taken to rectify these problems include efforts to improve the performance of the transverse joints in the maximum negative and positive moment regions, post-tensioning the transverse joints longitudinally, and ensuring full composite action between the precast panels and the supporting system using a formed haunch and sufficient shear connectors.

2.2 System Components

Several components, listed in subsequent sections, are considered in the design of the bridge deck system. Components of the full-depth precast bridge deck system are shown in **Figure 2.2-1.**

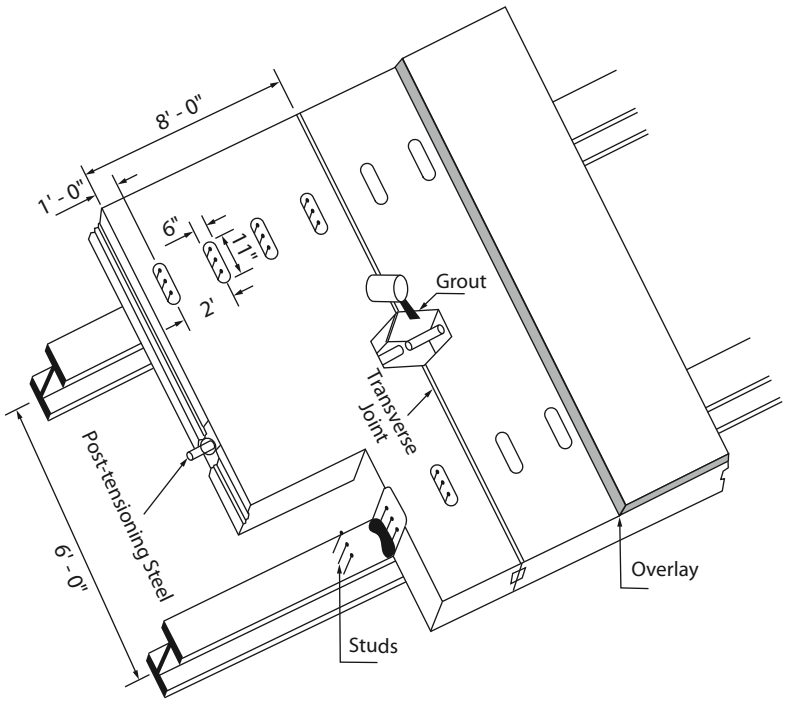

Figure 2.2-1 Typical layout of the full-depth precast bridge deck system.

2.2.1 Precast Panels

The panels are designed for transverse flexure with mild reinforcement, prestressing strands, bonded post-tensioning strands, or a combination of these. Many precast panels contain a sufficient quantity of transverse prestress to avoid cracking during handling and erection of the slab units. The panels should be furnished with longitudinal reinforcement for load distribution, as indicated in Section 2.4. The design of the distribution reinforcement should be in accordance with *LRFD Specifications* based on a slab with mild reinforcement. It is important that the surfaces of the shear pockets and joints are free of dirt, oil, grease, etc., prior to grouting, in accordance with the grout manufacturer's specifications.

2.2.2 Panel Thickness

LRFD Specifications, Article 9.7.5, recommends a minimum thickness of 7 in. excluding any provision for grinding, grooving, and sacrificial surface. However, the minimum slab thickness is controlled by the minimum concrete cover requirements. *LRFD Specifications* require a minimum concrete cover of 2 in. on the top layer of reinforcement and a minimum cover of 1 in. on the bottom layer of reinforcement. Post-tensioning may require an increase in the minimum slab thickness to 8½ in., depending on the type of post-tensioning system used. For typical girder

spacing, the minimum deck thickness is structurally sufficient. Often, handling and shipping constraints may dictate slab thickness and reinforcement requirements.

2.2.3 Panel Concrete Mix Design

The slab mix should be high-performance concrete with sufficient strength and durability parameters. The deck panels may be shipped to the bridge site when their strength is adequate to resist the shipping and handling stresses. This concrete strength will depend on support and rigging conditions for handling and erection respectively and may be well below the 28 day strength. Although the required strength can be achieved in as little as one day with HPC mixes,[12] it is common practice to install the panels at a concrete age of 28 days or greater to ensure that a significant amount of the shrinkage deformation (and creep for pretensioned members) has occurred prior to panel installation.

State practices vary in using performance-based and prescriptive specifications for concrete mixes. The following is an example mix developed for the Wacker Drive project in Chicago that was shown to have worked well:

Cement Type I	525 lb/yd^3
Natural Sand (FA-2)	1140 lb/yd^3
Coarse Aggregate	1800 lb/yd^3
Densified Silica	27 lb/yd^3 (5% by cement wt.)
Slag	79 lb/yd^3 (15% by cement wt.)
Flyash	53 lb/yd^3 (10% by cement wt.)
W/CM Ratio	0.37
Air Entraining Admixture	(as Required)
Water-Reducing Admixture	(as Required)

2.2.4 Panel Configuration

The size and configuration of the precast slab depend on the geometric layout of the bridge in question, since many bridges impose irregular geometrical constraints on the type of construction. Precast panels may be cast as skewed or rectangular panels depending on the aspect ratio of the bridge slab and the designer's preference. If rectangular panels are used on a skewed bridge, then special end panels will have to be made to account for the skew. For a skewed panel, setting the transverse reinforcement parallel to the transverse edge of the panel (at a skew angle to the girders) allows the producer to cut all transverse reinforcement at equal lengths, which increases production efficiency. The decision to cast the deck panels on the skew may impact fabrication costs because of the additional strand waste and possible premium for skewed side forms.

2.3 Transverse Design (Perpendicular to traffic flow)

The precast deck panel system is designed using the strip design method, where a transverse strip of the deck is analyzed as a continuous beam supported by the bridge girders. The girders are considered rigid supports with no settlement. The strip method concept results in providing the

main reinforcement in the transverse direction of the deck. Once the flexural effects due to dead and live loads are determined, the transverse strip is designed as a pretensioned or conventionally-reinforced concrete member, where service stresses at critical sections are checked against the AASHTO LRFD allowable stresses and then the nominal flexural resistance and reinforcement limits are checked. Proper AASHTO LRFD load combinations should be used for various checks. For example in a pretensioned panel, SERVICE I and SERVICE III limit states should be used for checking allowable compressive and tensile stresses, respectively; and STRENGTH I limit state should be used for checking the nominal flexural resistance.

The strength design procedure of a prestressed concrete member is essentially the same as that for a conventionally-reinforced concrete member. However, some differences in behavior occur in the stress-strain relationship between the prestressing steel and the mild reinforcement. It is highly recommended to utilize the strain compatibility concept in determining the nominal flexural resistance of the deck for the following reasons:

- variation of the stress-strain relationship between the prestressing and mild steel non-prestressed reinforcement
- to accurately account for the effect of various tensile reinforcement layers especially those that are close to neutral axis of the section

2.3.1 Loading

Continuous beam analysis should be utilized to determine the flexural effects due to all types of dead loads: slab, overlay, barriers, and utilities.

LRFD Specifications Appendix A.4 provides a table of flexural effects for deck slabs meeting certain conditions and criteria. Usually these criteria are easily satisfied for the vast majority of bridge decks. The tabulated values include the distribution factor and dynamic allowance.

2.3.2 Reinforcement

The main reinforcement of full-depth precast concrete deck panels is in the transverse direction. The panel can be reinforced with conventional mild steel reinforcement, prestressing strands, bonded post-tensioning strands, or a combination of these depending on the size of the panel.

Some states limit the maximum bar size for conventional mild steel reinforcement in the slab to a No. 6 bar. However, other states allow bar sizes as large as No. 9. Smaller bars are more effective in controlling crack widths than larger bars.

The most common prestressing strands used in precast deck panels is ½ in. diameter, low relaxation, with a specified tensile strength of 270 ksi. However, the design engineer may opt to use from ⅜ up to 0.6 in. diameter strands. It is recommended to provide the strand group concentric with the concrete section in order to provide a precast deck panel with minimal camber or deflection. It is common to provide two layers of strands.

When staged construction is utilized, transverse bars in the panels may be lapped at the staged construction joint (longitudinal joint) or panels may be transversely post-tensioned across the staged construction joint.

2.3.3 Overhang Design

As a general rule, the overhang length should not be more than half the girder spacing with 4 ft 3 in. a recommended maximum.

Special attention should be given to the design of the slab overhang with regard to the development of prestressing strands. If the strands cannot be developed within the slab overhang, a design using mild reinforcement or post-tensioning in conjunction with prestressing may be necessary in order to accommodate the overhang moments. Recently, in the overhang details of the NUDECK system, the strands were confined by high strength spirals that helped to reduce the development length of ½ in. diameter strands to 36 in.[13]

Precast bridge deck design should account for a barrier crash load. Specific details on designing the overhang to withstand the impact of a vehicle crash load are given in a design example in Appendix D of this report.

2.4 Longitudinal Design (parallel to traffic flow)

The main reinforcement in the deck panels is located in the transverse direction (perpendicular to traffic flow); however, longitudinal (in the direction of traffic flow) reinforcement is needed to distribute the live load. The longitudinal design includes the panel-to-girder connection, which allows the bridge deck to act as composite or non-composite with the girders.

2.4.1 Reinforcement

Typically, conventional longitudinal reinforcement is provided in the deck slab to: (1) control shrinkage cracking, and (2) distribute the live load in the longitudinal direction. However, the design engineer may opt to utilize longitudinal post-tensioning conforming to *LRFD Specifications* 9.7.5.3 to provide live load distribution across panel joints and secure the joint against leakage. Section 2.4.3 of this chapter contains further information.

The longitudinal bars in the top and bottom of the slab may be sized for temperature and shrinkage requirements per *LRFD Specifications* 5.10.8, or it may be accommodated through handling and transportation reinforcement. In slabs where longitudinal post-tensioning is not used, *LRFD Specifications* 9.7.3.2[5] requires distribution reinforcement in the bottom of slabs.

2.4.2 Deck Panel-to-Girder Connections

Deck panels can be connected to supporting girders using either composite or non-composite connections. Shear connectors should be capable of resisting both horizontal and vertical movement between the concrete and the supporting system. In making the slab units and the supporting system fully composite, the maximum spacing of shear connectors is 2 ft, as given by *LRFD Specifications*.[5] However, research has resulted in bridge deck construction utilizing a shear connector spacing of 4 ft.[14] Additionally, NCHRP Project 12-65 research has also verified the adequacy of a 4 ft. shear connector spacing.[1] Conventional procedures are followed to obtain the number of shear connectors needed for composite design. The design for variable horizontal shear can be accommodated by changing the number of shear connectors per shear pockets. The shear pockets (see **Figure 2.4.2-1**) should have rounded corners and should be wider at the top than at the bottom for ease of stripping forms.

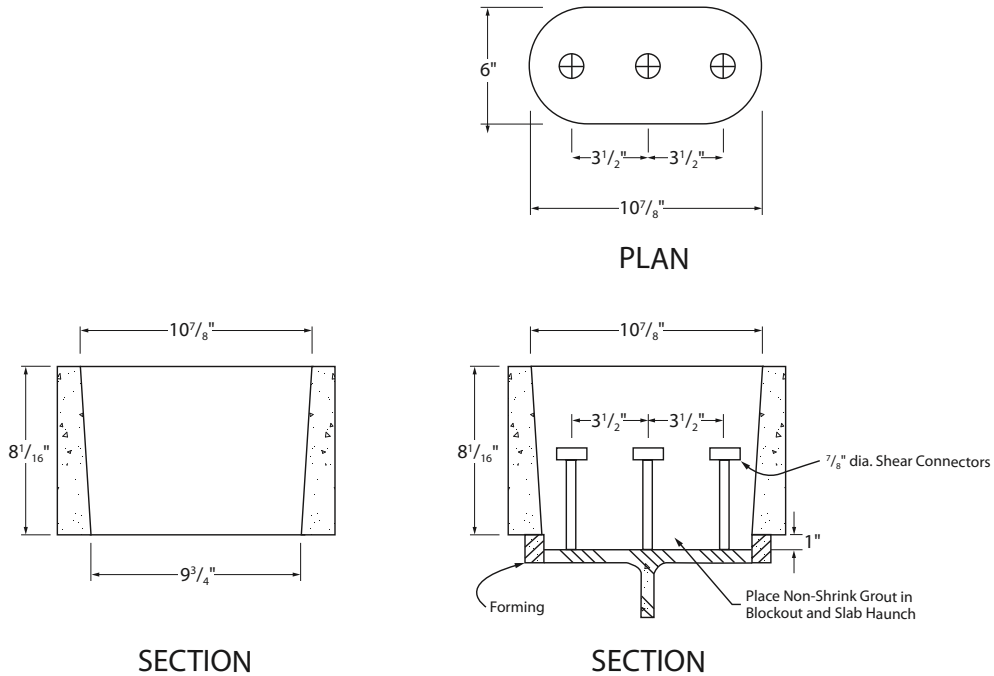

Figure 2.4.2-1. Shear studs and shear pocket details.

Large diameter shear studs have been the subject of extensive research in recent years, including the work performed under NCHRP Project 12-65.[1] A 1¼-in. diameter stud replaces two ⅞-in. diameter studs. Larger diameter shear studs reduce congestion in the pockets and produces structural capacity consistent with current *LRFD Specifications*.

2.4.2.1 Deck Panels on Steel Girders

Shear connector studs should conform to *LRFD Specifications* 6.4.4 and 6.10.10, for fatigue and nominal resistance design on steel girders, as in conventional construction. It is recommended that the minimum distance between the centers of the studs be 2½ in.;[15] while the distance between the edge of the girder flange and the center of the stud to be not less than 1½ in.[15] Details of shear studs and shear pockets for precast deck panels on steel stringers are shown in **Figure 2.4.2-1**, and others are presented in Chapter 3.

2.4.2.2 Deck Panels on Concrete Girders

Interface shear resistance design should conform to *LRFD Specifications* 5.8.4, as in conventional construction. Reinforcement for interface shear between the concrete slab and the concrete girders may consist of single bars, multiple leg stirrups or multiple threaded bars, which are concentrated in shear pockets spaced at 24 in. Horizontal shear reinforcement should be anchored to develop the specified yield strength on both sides of the shear plane by embedment or hooks. The bars should be anchored in both the concrete girder and the precast slab. Details of shear connectors and shear pockets for precast slabs on concrete girders are shown in **Figure 2.4.2.2-1**, and others are presented in Chapter 3.

Another option with concrete girders is to cast a plate in the top of the girder and weld studs to it similar to the process for steel girders.

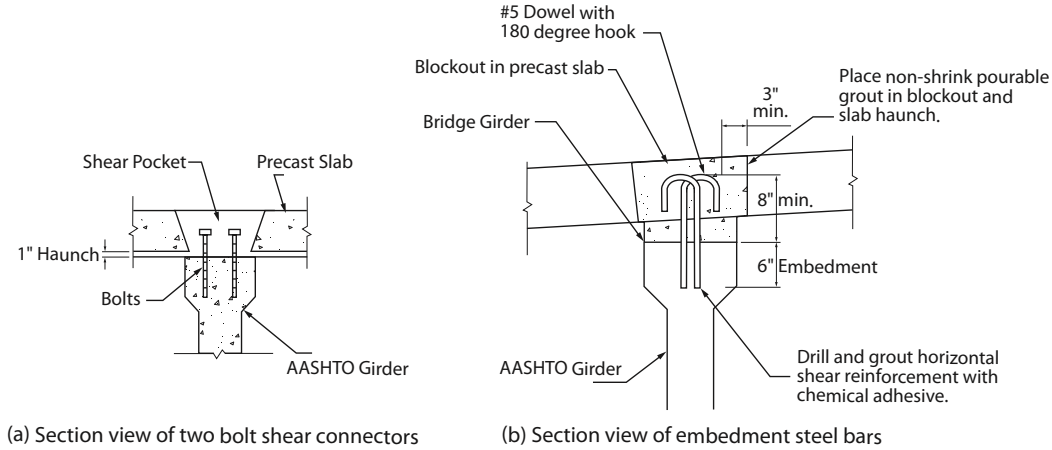

Figure 2.4.2.2-1. Section views of shear connector for precast concrete girders.

2.4.3 Longitudinal Post-Tensioning

Post-tensioning provides compression through the precast panel joints. This residual compressive force imparts excellent crack control and water tightness. Post-tensioning enhances long-term durability resulting in lower long-term maintenance cost. Research studies of past bridge rehabilitation projects[16] indicate that the most common cause for deterioration of precast bridge deck panels is concrete cracking across the joints.

Longitudinal post-tensioning provides continuity between precast panels. The post-tensioning should be located at mid-depth in the slab units and run the entire length of the bridge or between closure pours. The post-tensioning should transmit a minimum prestress level of 0.250 ksi[5] after all losses for simply supported spans. Additional prestress is needed to overcome the tensile stress due to negative composite dead and live load moments in continuous spans. A prestress level of 0.300-0.850 ksi may be required for these continuous spans depending on the magnitude of the maximum negative moment. There are three types of longitudinal post-tensioning that can be used:

- high strength threaded rods
- mono-strand
- flat multi-strand tendon

In all types, the post-tensioning reinforcement will be provided in straight ducts that are installed during fabrication of the panels and grouted after the reinforcement is inserted and tensioned.

An important aspect of design is ensuring that the precast deck panels are in zero tension in the longitudinal direction under all applied loads, taking into full consideration the long-term effects of concrete creep and shrinkage. Tension stresses and corresponding cracking of the concrete deck is one of the primary factors affecting the durability of a deck system. Creep and shrinkage cause a reduction of post-tensioning compression in the deck and load transfer to the supporting system. Panels are typically cast two to three months prior to erection so a significant amount of the shrinkage has occurred before deck placement. Some states use 0.100-0.200 ksi residual stress, in negative moment sections, to account for shrinkage and creep. Allowing for a higher residual stress leads to more creep due to compression from post-tensioning and superimposed dead load when there is no live load present.

For post-tensioned composite bridges, it is also important to minimize the friction losses and the load transfer effects due to the longitudinal restraint in the direction of the primary post-tensioning. Increased wobble friction can arise from a lack of attention to the specified geometric tolerances during panel fabrication. Misalignment of the post-tensioning duct at the transverse joint results in a small angle break at each joint, thereby increasing wobble friction. Grout leakage into the post-tensioning duct will result in a significant increase of friction or even blockage of the duct.

2.5 Design Examples

A complete design example can be found in Appendix D.

CHAPTER 3 – SYSTEM DETAILS

3.1 INTRODUCTION

In the design of a full-depth precast deck panel systems, the designer is faced with a wide array of choices. Full-depth precast concrete deck panels can be fabricated to cover the full or partial width of a bridge. They can be transversely pretensioned or conventionally reinforced. Also, they can be made composite with the supporting girders by extending shear connectors from the girders into the panels through prefabricated pockets. The panels are installed next to each other and several types of panel-to-panel joints have been employed. In some cases, the design engineer opts to post-tension the panels in the longitudinal direction to put the transverse gap between panels under compression and eliminate possible cracking under traffic loads. However, other CIP, non-post-tensioned joints have also been used successfully. The proper combination from this wide selection of details will increase the constructability and long term durability of the precast deck panel system.

This chapter provides information on the details of full-depth precast bridge deck panel systems. Presented in the following sections are connection details that have been used in bridges built in the United States during the past 30 years. These details were collected from literature review and a survey conducted in the ongoing NCHRP 12-65 project, "Full-Depth, Precast-Concrete Bridge Deck Panel Systems," as well as from other past surveys and reports.[1] The latest NCHRP survey was sent to state highway agencies in the United States, Canada, and Mexico. The goal of this summary is not to report all of the bridges built with full-depth precast panels or to suggest a preference for particular details, but to show the diversity of details used in full-depth precast deck panel systems.

This chapter provides information on panel leveling methods, haunch forming systems, horizontal shear connectors on steel and concrete girders, transverse joints, post-tensioning details, and longitudinal joints.

3.2 BRIDGES BUILT WITH FULL-DEPTH DECK PANELS

Past bridges built with full-depth precast deck panels can be broken down into two significant categories:

- primarily non-composite bridges
- primarily composite bridges

3.2.1 Applications Prior to 1973

Several bridges were constructed using full-depth precast panels before 1973.[17] Among them were the Pintala Creek Bridge, (Montgomery County, Ala.), the Kosciuszko Bridge, (Brooklyn-Queens Expressway, New York), the Big Blue River Bridge, (Kingstown, Ind.), and the Bean Blossom Creek Bridge (Bloomington, Ind.). Biswas[17] reported that these structures had, in general, performed well. However, some structures had partial failure of panel-to-panel joints. Follow-up phone interviews that were conducted between the authors of Biswas' paper and the designers in the highway agencies where some of these bridges were built have shown that this

type of failure was local and was a result of a lack of longitudinal post-tensioning and/or overlay deterioration.

Features of these bridges can be summarized by the following points:

- the deck girder systems were primarily non-composite
- the spans did not have any skews, or super elevations
- more projects involved new construction than rehabilitation
- fewer geometric fit-up problems were experienced with new construction than with deck replacement
- full-depth precast deck panel systems were used for both temporary and permanent bridges

3.2.2 Applications After 1973

Since 1973, significant advances in the construction of full-depth precast concrete deck panels have been made and many major bridges have been built with precast concrete panels. Most of them were made composite with the superstructure. One improvement was the use of high-performance concrete in the deck panels. Also, innovative transverse joints were designed to protect against joint cracking and leakage; additionally, longitudinal post-tensioning has been used in many cases to further improve the performance of these joints. The following sections give a summary of some of the connection details that were used in these bridges.

3.3 Deck Panel-to-Girder Connections

The connection of the panel to the girder is critical to the constructability and durability of the deck panel system. This section describes previously-used details for both composite and non-composite connections on both steel and concrete girders. Some of the issues addressed are the panel leveling system, the haunch forming system, the type and size of horizontal shear connectors, the spacing of blockout (shear connector) pockets, and the type of grout used to fill the haunch and pockets.

3.3.1 Panel Leveling System and Haunch Formwork

A system must be in place to enable the precast panels to be set to the proper elevation and also to uniformly distribute the dead load of the panels to all of the supporting members. One common method is to cast into the panel, over each supporting girder, a threaded pipe or a pipe sleeve and plate with a nut welded to it. A bolt is threaded through the nut, with the end of the bolt resting on the top of the girder and the head of the bolt accessible in a pocket on top of the panel. **Figures 3.3.1-1** and **3.3.1-2** illustrate several systems that have been used in previous projects. A minimum of two bolts per girder line is used per panel. These bolts are designed to support the panel weight and expected construction loads. Several bolts are used to set the panel to the proper elevation. Then, the remaining bolts can be turned until they come in contact with the top of the girder. In order to ensure sufficient bearing on all bolts, they should be adjusted so the torque per bolt is close to the average. After the grout in the haunches and shear pockets gain strength, the bolts are removed or torch cut and patched.

In most of the projects built before 1973, the panels were supported on the girders using steel shims. This technique is no longer in use.

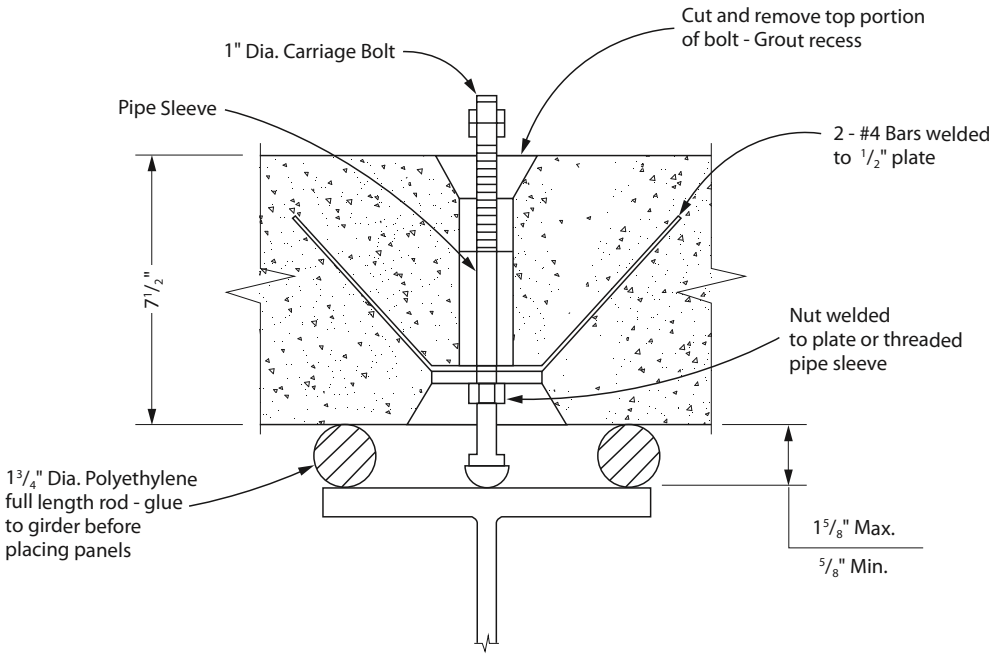

Figure 3.3.1-1. Leveling Screw Detail.

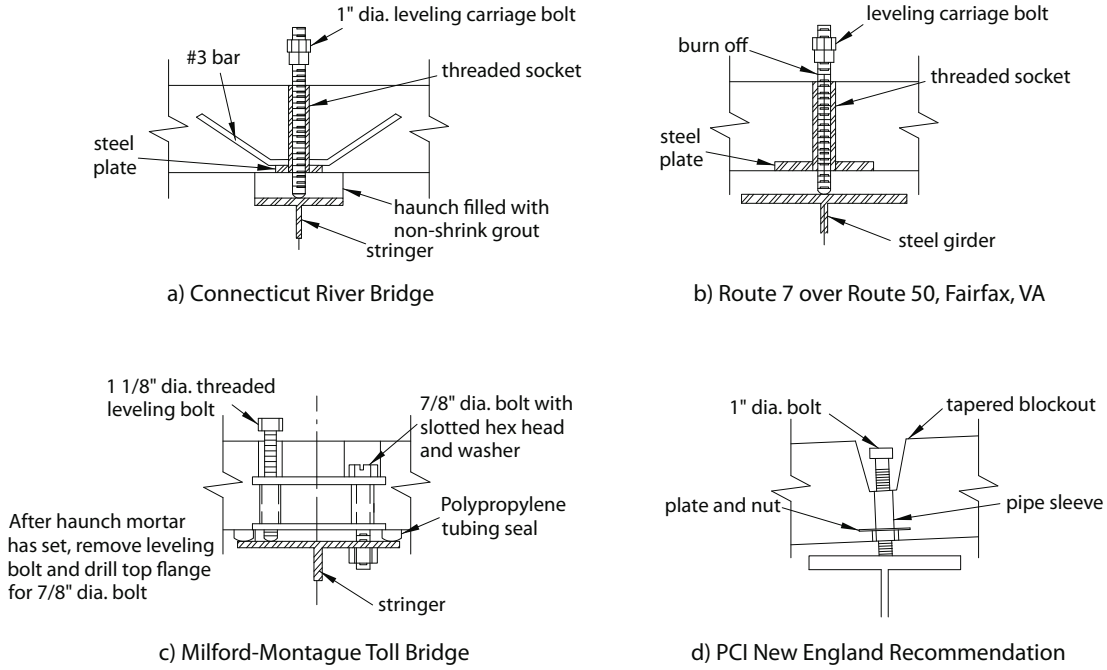

Figure 3.3.1-2. Leveling bolts from various bridges.

A minimum 1 in. haunch should be provided between the precast panels and the girders to allow for adequate tolerances. Forming for the haunch should be made at the bottom of the panel so that grout can flow along the haunch from one shear pocket to the other to be sure that the haunch is fully grouted.

Figures 3.3.1-1 to 3.3.1-7 illustrate some of the methods that have been used in the past to form the haunch. The methods range from removable formwork, which requires access to the underside of the slab in order to remove the forms, to compressible backer rod, which is placed before the panels are set and can remain in place. Some projects utilize extruded polystyrene placed along the edges of the girders prior to placement of the panels. However, in some instances the extruded polystyrene alone may not contain the grout.

Many other details have been used to build dams for grout, such as the bolted light-gauge side forms using ¼ in. diameter tie rods that were used on Queen Elizabeth Way-Welland River Bridge (Ontario, Canada), as shown in **Figure 3.3.1-4**. Elastomeric strips have also been used on the Clark's Summit Bridge on the Pennsylvania Turnpike as shown in **Figure 3.3.1-5**. In both cases, bridge tie anchors, bolted on the bottom surface of the panels, were used to secure the grout dam against leakage.

A new method that has proved to be cost-effective and efficient for both panel leveling and haunch forming is similar to the system used to support stay-in-place precast concrete deck panels and steel deck forms. **Figure 3.3.1-6** illustrates the type of panel leveling and haunch forming system used on the Skyline Bridge in Nebraska. Steel angles are placed along the edges of the girders with the horizontal leg supporting the panel and set to obtain the correct deck elevations. The vertical leg is set against the edges of the top flange of the beam, and steel straps are welded to tie the angles together across the top of the top flange. This type of system requires that surveyors shoot initial elevations along the top of the beams, so the angles can be properly set. The system was successful on this project.

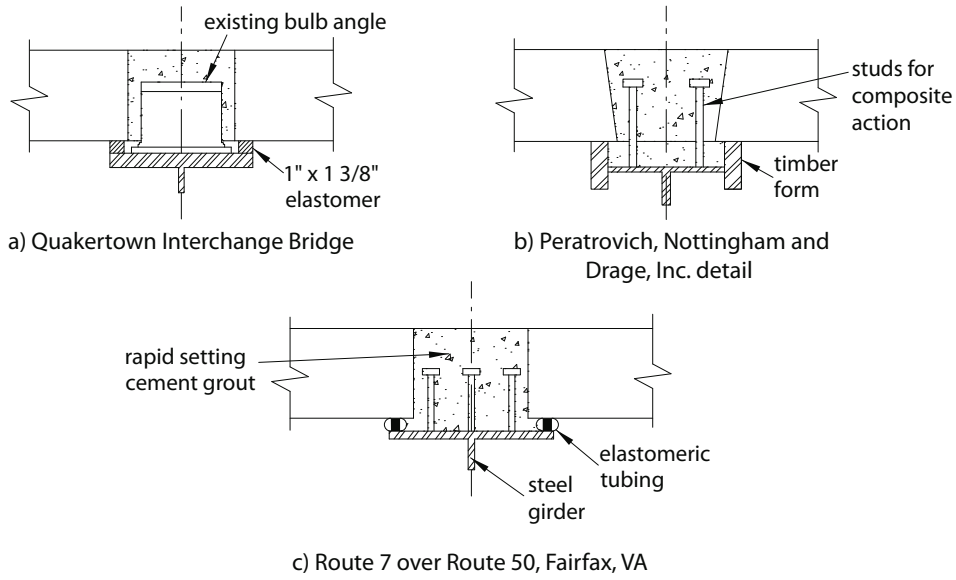

Figure 3.3.1-3. Haunch forming details from various bridges.

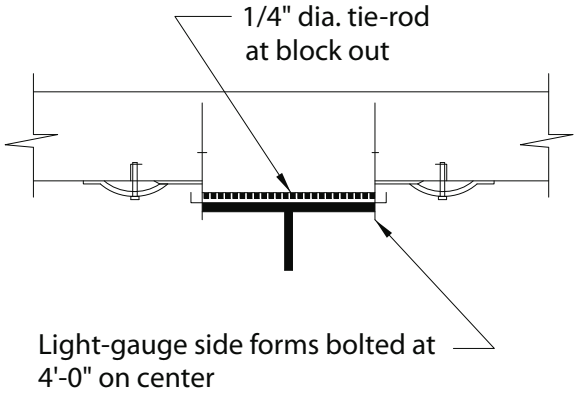

Figure 3.3.1-4. Grout dam built using light-gauge forms
(Queen Elizabeth Way-Welland River Bridge, Ontario, Canada).

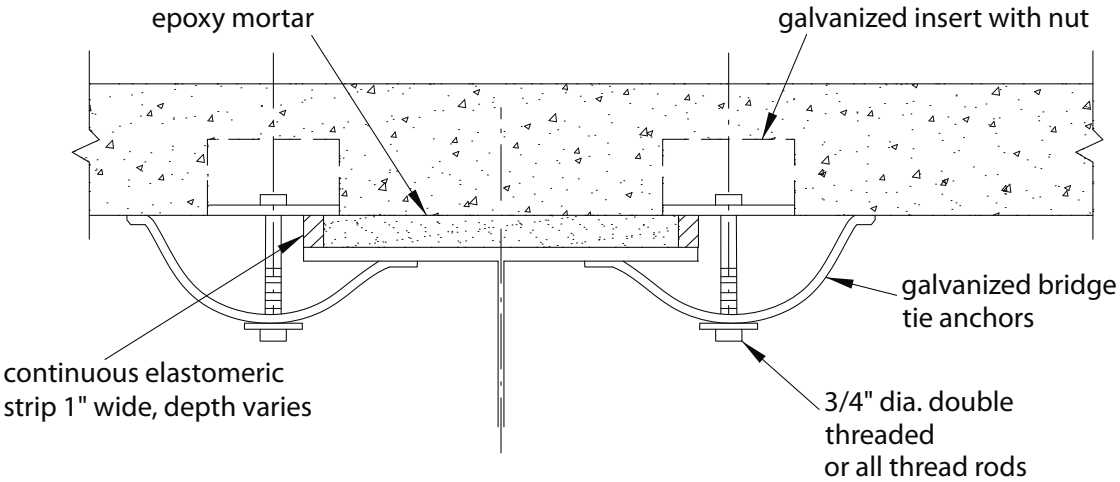

Figure 3.3.1-5. Grout dam built using elastomeric strips
(Clark's Summit Bridge, Pennsylvania Turnpike).

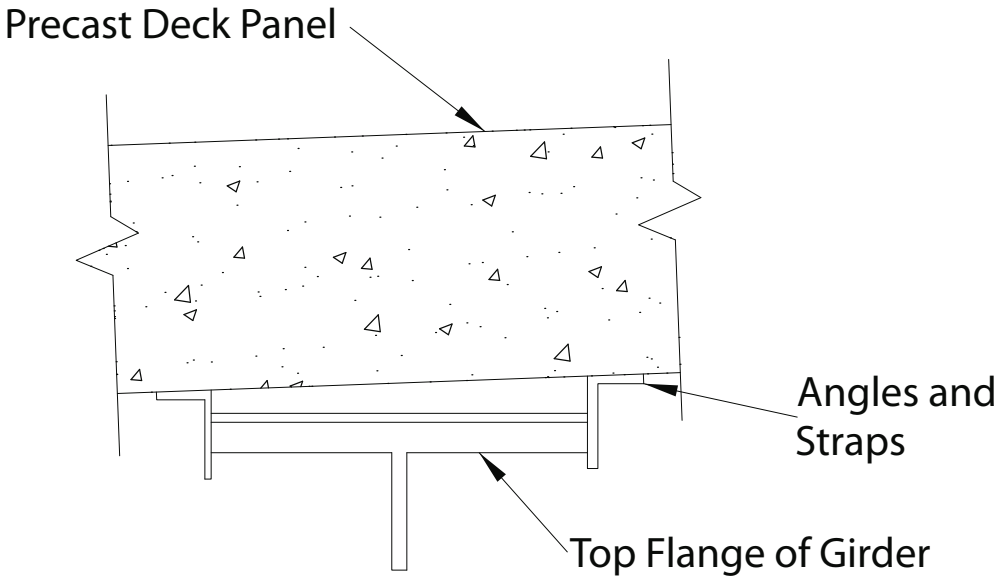

Figure 3.3.1-6. Leveling and haunch forming system similar to Skyline Bridge.

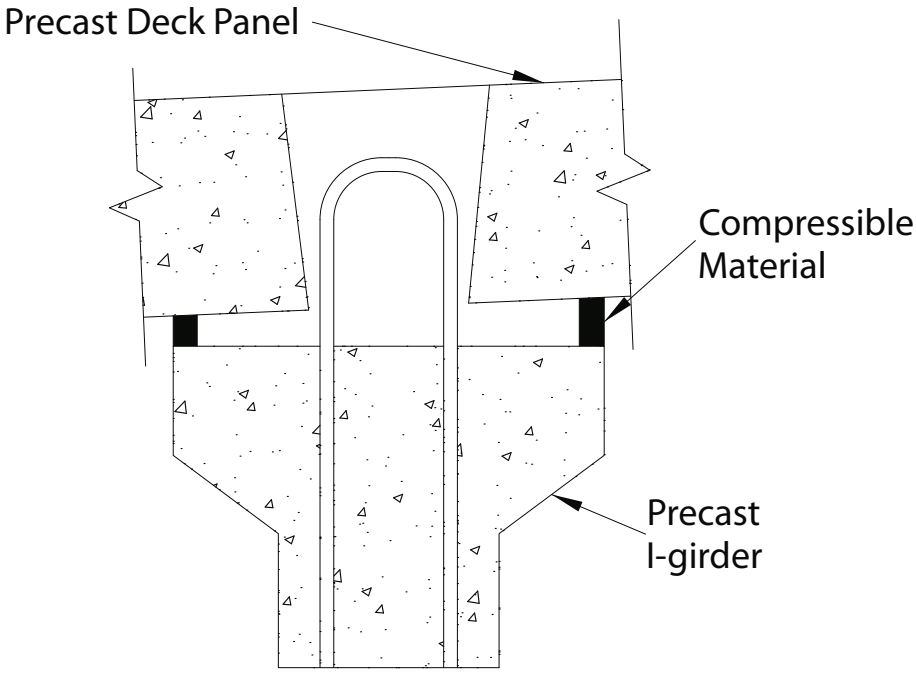

Figure 3.3.1-7. Leveling and haunch forming system similar for partial depth panels.

3.3.2 Horizontal Shear Connectors on Steel Girders

Currently, the majority of bridge decks are made composite with the superstructure. This has been achieved by extending steel shear studs or structural steel channels into the precast deck through prefabricated pockets in the deck panel. The spacing between the pockets ranges from 18 to 24 in. and the number of studs per pocket ranges from 4 to 12, while the number of studs per row typically ranges from one to four. Larger diameter shear studs, such as used on the

Skyline Bridge,[18] reduces construction time and simplifies design detailing of the shear pockets. Skyline bridge details are shown in Appendix C. **Figure 3.3.2-1** illustrates other details of shear pockets used in previous projects.

In addition to steel shear studs, standard channel sections welded to the top flange were used in some bridges, such as the experimental bridge at Amsterdam, New York,[19] as indicated in **Figures 3.3.2-2 and 3.3.2-3**. Although the experimental study demonstrated that the channel welded sections performed well, their use was very limited in bridges because of the relatively long time required for welding compared to attaching shear studs. On the same experimental bridge, a bolted connection was also used. In the bolted connection, the panels were placed using steel shims for leveling. After the holes for the bolts were drilled in the top flange of the steel girder through the sleeves in the panels, high strength bolts were fastened. Achievement of full tension in the bolts could not be determined because cracking of the precast slab due to excessive tensioning was anticipated. Practical drawbacks to this detail have not lent itself to be used on subsequent projects.

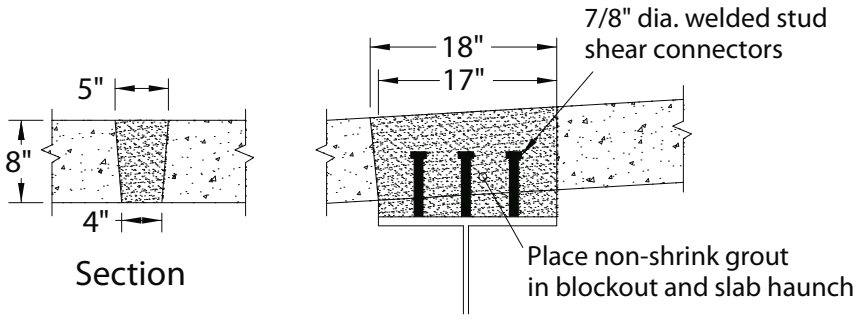

a) Bridge 03200, Connecticut DOT

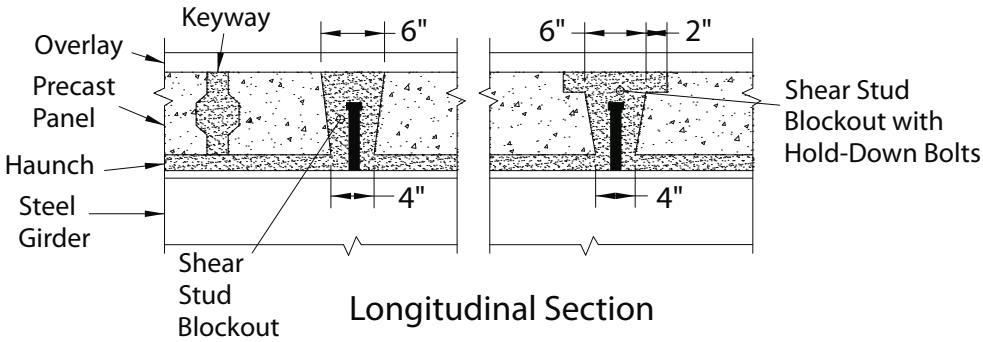

b) Rt. 7 over Rt. 50, Fairfax, VA

Figure 3.3.2-1. Transverse and shear pocket details.

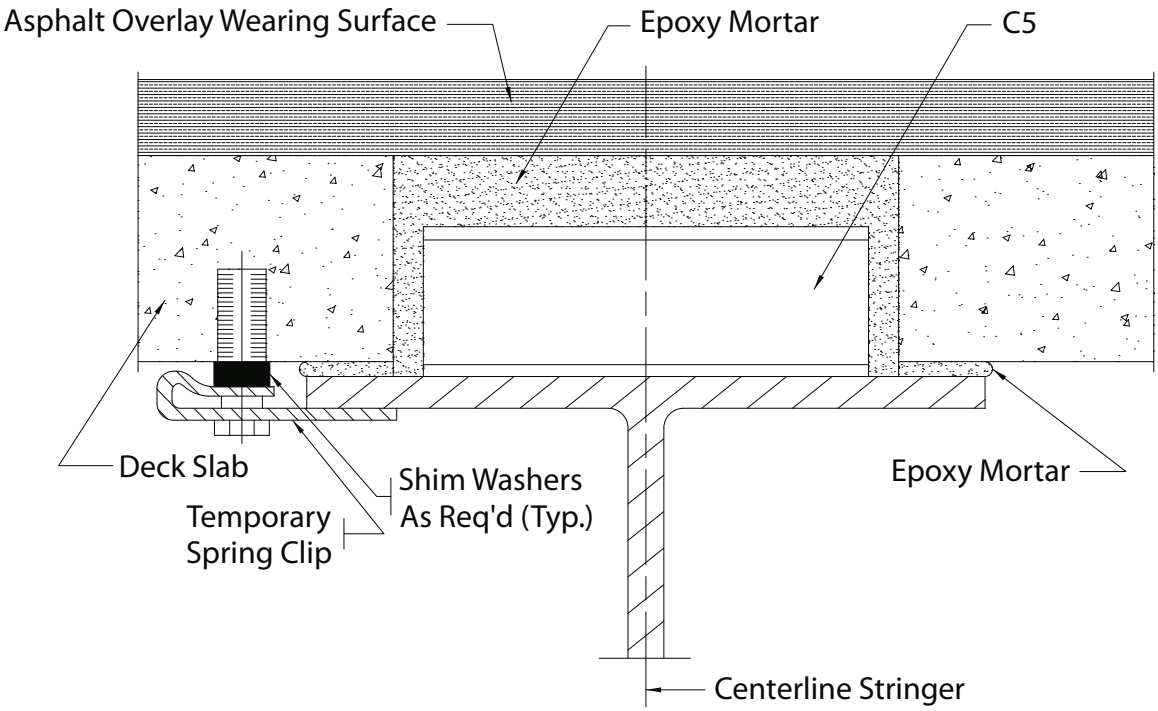

Figure 3.3.2-2. Welded channel section used in the NY Thruway Experimental Bridge.

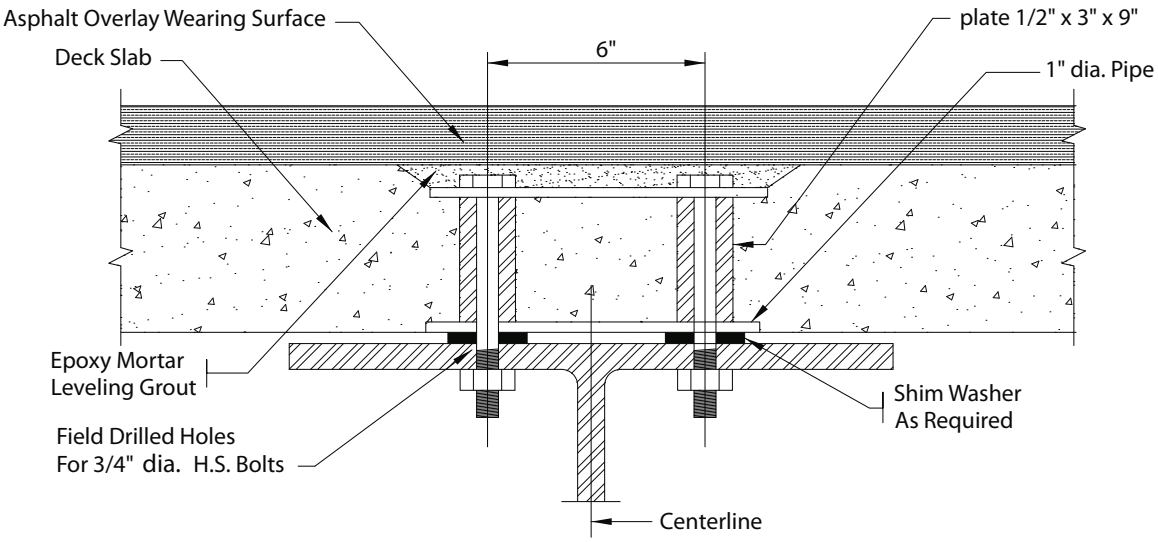

Figure 3.3.2-3. Bolted detail used in the NY Thruway Experimental Bridge.

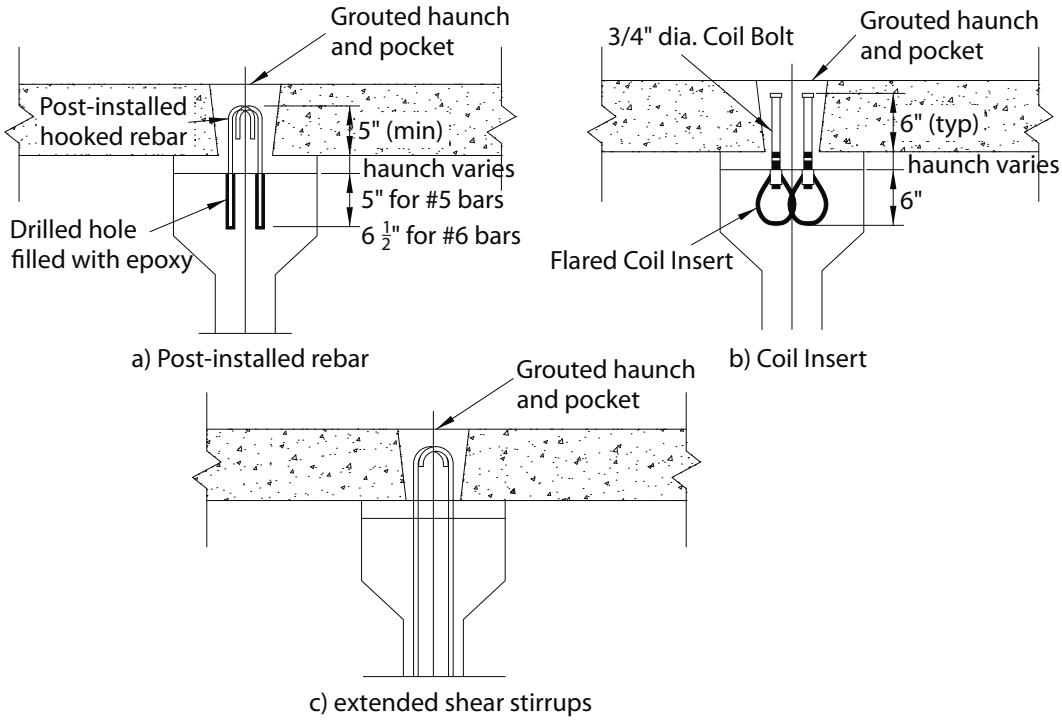

Figure 3.3.3-1. Details for horizontal shear connectors on precast girders (CLR-W).

3.3.3 Horizontal Shear Connectors for Concrete Girders

Shear connectors for precast concrete girder bridges could be provided by stirrups extended out of the top of the girder. Deck replacement projects can use hooked rebar or headed studs and rods that are field-installed in drilled holes using epoxy or grout. Some possible details are illustrated in **Figure 3.3.3-1**.

The precast deck panel system has had limited use on precast concrete girders. Research was performed to investigate the strength and behavior of the panel-to-girder connection for concrete girders.[20, 21] In addition to traditional extended stirrups for the shear connectors, several alternate connectors were tested which could be used for deck replacements or to facilitate more rapid bridge deck replacement. The research indicated that the horizontal shear interface equations in *LRFD Specifications* are adequate for shear connector design in precast panel/girder systems. The *LRFD Specifications* requires a maximum shear connector spacing of 2 ft, although research has demonstrated that a spacing of 4 ft is adequate.[1]

3.3.4 Non-Composite Connections

Prior to the 1970s, many non-composite bridge decks replaced with the full-depth panel system were designed to be non-composite with the supporting girders. This results in a less efficient structural system, but simpler panels and details. **Figures 3.3.1-5** and **3.3.4-1** illustrate two previously implemented panel-to-girder connections for non-composite decks. Experience indicates that these types of connections have allowed panels to work loose causing maintenance problems.

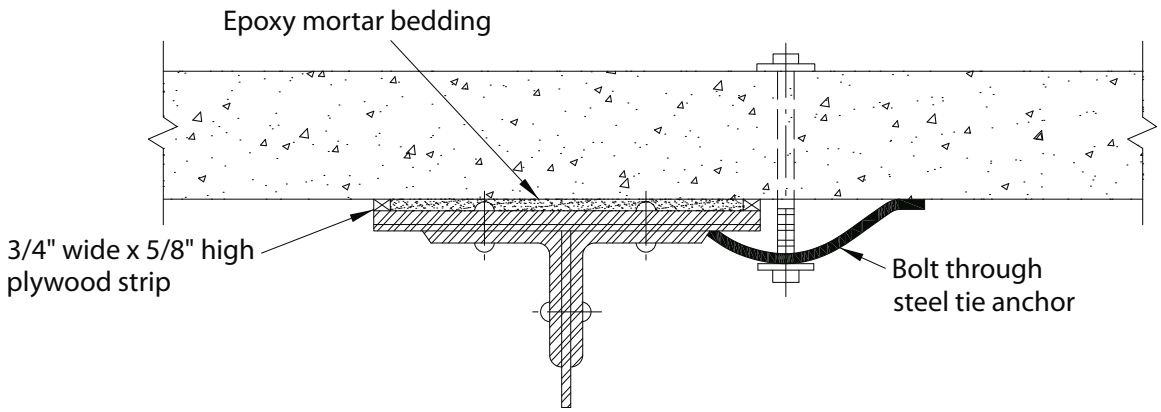

Figure 3.3.4-1. Non-composite deck connection details from Santa Fe Railway Bridge.

3.3.5 Grout for Haunches and Pockets

The grout used to fill the haunches and shear connector pockets is required to have specific properties such as:

- Low shrinkage
- High early strength
- Good bond to deck panel and girder
- Good flow
- Low bleed
- Good durability
- High freeze/thaw resistance (where exposed as a riding surface)

Pre-packaged "expansive" grouts, as specified by the Post-Tensioning Institute, should be considered for these applications. When pre-packaged grouts are used, the recommendations of the manufacturer should be followed. For larger volume projects, self-consolidating concrete could be used. Nottingham[22] presented recommendations for shear key and haunch grout based on his experiences on a series of full-depth decks used in Alaska. **Table 3.3.5-1** presents his grout property recommendations. Grout should be poured from low point to high point, one opening to another such that it does not entrap air during installation.

Previously implemented grouts have included magnesium phosphate,[23] non-shrink grouts, and epoxy mortar. For shear key grout, Issa et al. recommends a polymer grout or equivalent for best performance when high-early strength is desired.[24] Grout properties are sensitive to construction procedures.

Table 3.3.5-1. Recommended grout properties.

Compressive Strength	1.200 ksi @ 6 hrs. 4.500 ksi @ 1 day 6.500 ksi @ 28 days
Flexural Strength (ASTM C78, air cured)	0.550 ksi @ 1 day 0.600 ksi @ 28 days
Slant Shear Bond (ASTM C882)	2.500 ksi @ 28 days
Freeze-Thaw Resistance (ASTM C666, A modified)	RDF of 80%
Scaling Resistance (ASTM C672, 25 cycles)	0 scaling rating
Shrinkage (ASTM C596)	0.03% @ 28 days
Sulfate Resistance (ASTM C1012)	0.10% @ 28 weeks

3.4 Transverse Panel-to-Panel Connection

The transverse edges of the precast panels are usually provided with shear keys. Typically, the shear key that extends along the transverse edges of a precast deck panel plays an important role in the service performance of the finished deck. The shear key must be designed to eliminate relative vertical movement between adjacent panels and to transfer the traffic load from one panel to the next.

Under traffic load, a panel-to-panel joint experiences two types of loading:

1. A vertical shear force that tries to break the bond between the panel and the grout filling the joint, and
2. A bending moment that puts the top half of the joint in compression and the bottom half of the joint in tension.

Two types of shear keys have traditionally been used with full-depth precast concrete panels. These are:

1. Match-cast shear keys using epoxy adhesive. Although match-casting could be achieved in a controlled fabrication environment, i.e. in a precast concrete plant, it was very difficult to achieve a perfect match in the field after installing the panels due to construction tolerances and elevation adjustment of the panels. This detail was used in conjunction with longitudinal post-tensioning. Also, thin neoprene sheets were installed between adjacent panels to avoid high stress concentrations. Cracking and spalling of concrete at the panel joints was observed after five years of service,[25] which eventually led to a leakage problem at the joints. Match-cast panels generally are more expensive than grouted female-to-female shear keys. If match-cast shear keys are used as shown in **Figure 3.4-1**, the joints should be epoxy coated, and neoprene sheets are not recommended.

2. Grouted female-to-female joints use grout to fill the joint between adjacent panels. Inclined surfaces are provided in the shear key detail to enhance the vertical shear strength of the joint. Therefore, vertical shear forces applied at the joint are resisted by bearing and by the bond between the grout and the deck panel. The shear key is recessed at the top to create a relatively wide gap that allows casting the grout in the joint. **Figures 3.4-2** and **3.4-3** demonstrate some of these details.

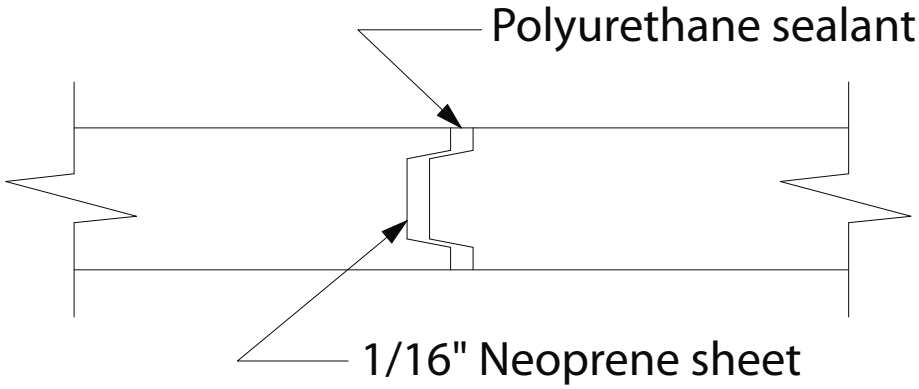

Figure 3.4-1. Non-grouted match-cast joint.

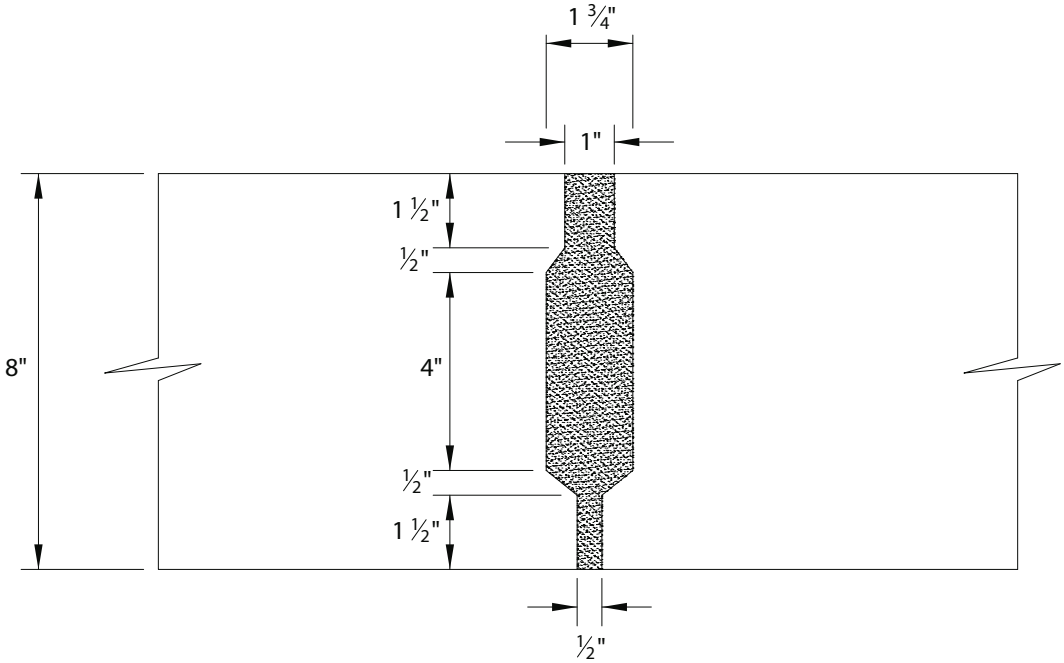

Figure 3.4-2. Typical female-to-female type transverse joint.

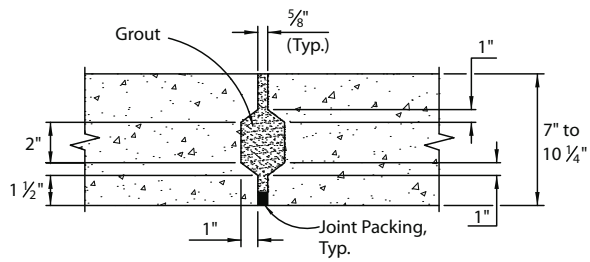

(a) Trapezoidal-shape shear key detail used in the Pedro Creek Bridge, Alaska

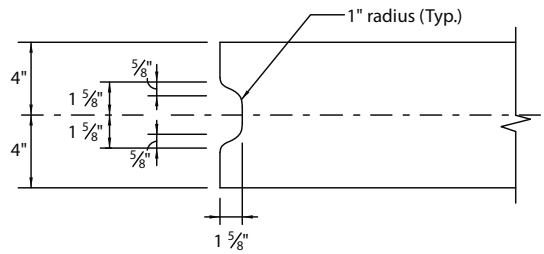

(b) Semi-circle shear key detail used in the George Washington Memorial Parkway Bridges, Washington DC

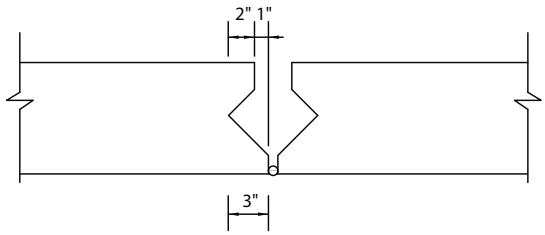

(c) V-Shape shear key detail used in the Skyline Drive Bridge, Omaha, Nebraska

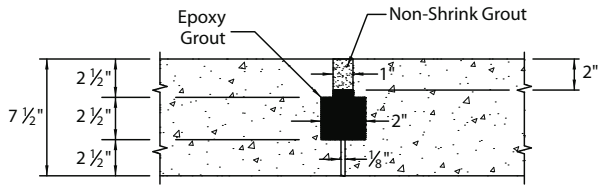

(d) Rectangular shear key detail used in the Delaware River Bridge, New York

Figure 3.4-3. Various grouted female-to-female joint details.

Two methods of forming female-to-female joints have been used:

1. Polyethylene backer rods are placed in the tight space between deck panels at the bottom of the joint (see **Figure 3.4-4**). This detail has been used for a long time by many highway authorities. Although this detail does not require any construction work to be performed from under a bridge,[26, 22] care should be taken to ensure the backer rod is secured at the bottom of the joint.
2. Forming material under the deck panel is used to contain the grout and completely fill the joint. In this detail, a gap of 1 to 8 in. is maintained between adjacent deck panels. Where the gap is relatively narrow, wood forms are installed from under the panel. For gaps wider than 4 in., the forms may be hung from the top surface of the precast panels, (see

Figure 3.4-5), which results in a more economical installation. Using this detail results in a full-height grouted joint with excellent service performance.[26, 27]

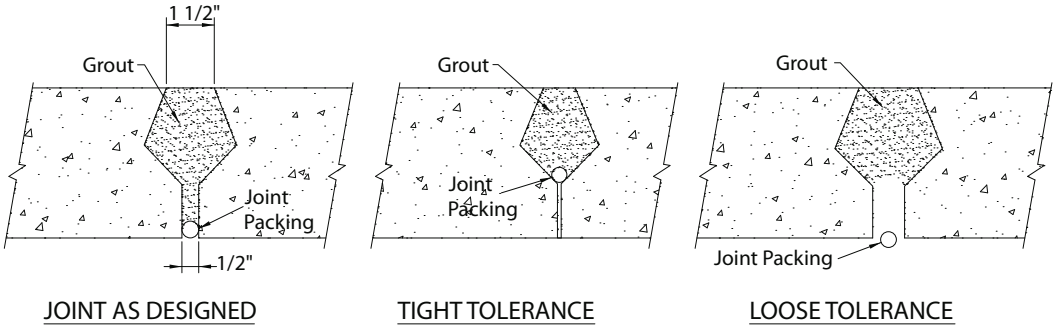

Figure 3.4-4. Effect of tight and loose tolerances on panel-to-panel joints.

Figure 3.4-5. Wood forming of panel-to-panel joints used in the Tied Arch Bridges, Tex.

The bond between the grout and the shear key surface can be significantly enhanced by removing all laitance and form oils from all surfaces. Some states have required sand blasting or other forms of surface cleaning and roughening.[27] This is important for connecting precast panels when no longitudinal post-tensioning is used and the joint is not pre-compressed. Roughening and cleaning can be achieved by sand blasting the shear key surface followed by a thorough

washing procedure. This operation can be done in the precast plant before shipping the deck panels or on the bridge site before installing the deck panels on the bridge. Roughening can also be achieved during fabrication of the panels by painting the side forms with a retarding agent. After removing the side forms, the shear key is washed with water under high pressure so that the aggregate of the concrete is exposed and a uniformly roughened surface is created. This concept was used by the Texas Department of Transportation on the precast concrete panels used for the Arch Tied Bridges, as shown in **Figure 3.4-6.**

Figure 3.4-6 Exposed aggregate roughened surface used in the Tied Arch Bridges, TX.

Recent projects in Japan have used a wider closure pour that allows splicing of the longitudinal reinforcement. The transverse joint between panels is made with CIP concrete placed above overlapping loops of reinforcing bars with additional reinforcing bars threaded through the loops (**Figures 3.4-7 and 3.4-8** demonstrate two variations of this arrangement). As shown in **Figure 3.4-8**, the panels are formed such that the required formwork under the closure pour is minimized. The decks are not longitudinally post-tensioned. Various joint details observed during an international scanning tour in 2004 were recommended by the scanning tour team for consideration in the United States to facilitate the use of prefabricated full-depth deck systems. Details from the prefabrication scan report are provided in Appendix B of this report.

Figure 3.4-7. Longitudinal joint in Anjo Viaduct, New Tomei Expressway.

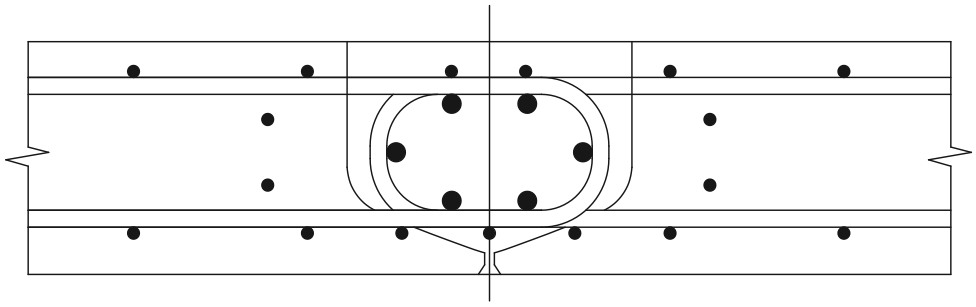

Figure 3.4-8. Overlapping U-bars in Closure Pour.

3.5 Longitudinal Reinforcement

Longitudinal reinforcement in deck slabs is used to distribute the concentrated wheel loads in the longitudinal direction. It is also used to resist the negative bending moment at the intermediate supports for continuous span bridges. Longitudinal reinforcement can be mild or prestressed. For deck slabs made with full-depth precast panels, lap splicing mild reinforcement at the transverse joint between panels is uncommon because:

- Typical panels have relatively short lengths (from 8 to 12 ft); and a relatively long concrete closure joint (2 to 3 ft) may be required to lap splice the longitudinal reinforcement. This requires wood forming under the panels for an extended period of time for curing. This partially offsets the advantages of precasting, as now only approximately ¾ of the bridge deck is precast.
- The transverse grouted-joint between panels should not be congested with steel in order to ensure adequate concrete consolidation. As such, the longitudinal bars projecting into the joint should be detailed carefully. Additional reinforcement in the joint should be placed only if necessary, considering that the reinforcement is in the secondary direction bending of the deck panels.

- Splicing the longitudinal reinforcement requires high quality control during fabrication of the panel to guarantee that the spliced bars match with very small tolerance.
- Splicing the longitudinal reinforcement may require creating pockets, which increases the cost of panel fabrication.

As a result, at least two highway agencies have opted not to splice the longitudinal reinforcement for simply supported span bridges. **Figure 3.5-1** shows the transverse joint of the precast deck system that was used on Dalton and Pedro Creek Bridges on Route FAP 65 in Alaska. Although ADOT design engineers have reported that there is neither significant cracking nor leakage at the joints, the reader should note that the average daily traffic on these bridges is very low compared to bridges built in metropolitan areas.

The majority of highway agencies prefer to provide some type of reinforcement across the transverse joints. This section describes various methods that have been used in the past to provide and splice the longitudinal reinforcement, either mild reinforcing bars or post-tensioning tendons.

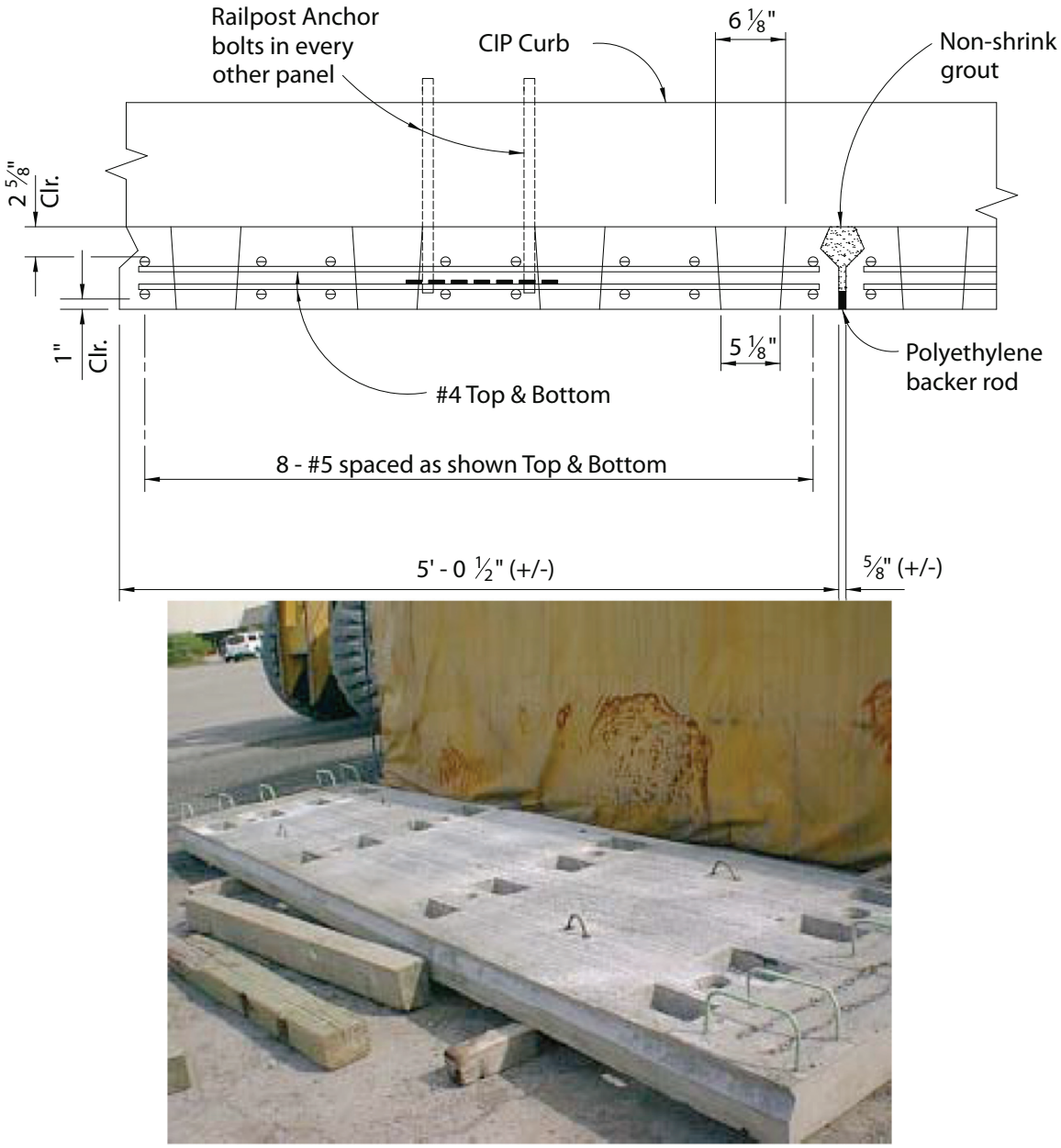

Figure 3.5-1. Non-reinforced panel-to-panel connections used on bridges by ADOT.

3.5.1 Mild Longitudinal Reinforcement

Several methods have been utilized for splicing mild longitudinal reinforcement. These include:

- A lap splice detail was used in the full-depth precast concrete deck panel system for the deck rehabilitation project of bridge C-437 carrying US-189 over I-80 to Wanship, Utah. Note that the design engineer allowed the use of a threaded coupler at the face of the transverse joints to simplify the side forms used in fabrication. **Figure 3.5.1-1** shows a similar detail.
- U-shaped bars have been used successfully in Japan and Europe. **Figures 3.4-7** and **3.4-8** show examples of the overlapping U-shaped bar splicing method.
- A spiral confinement detail has been developed to reduce the lap splice length and give higher construction flexibility to the splice connection.[28] **Figure 3.5.1-2** shows the splice connection where a high strength spiral confines a loose bar. This detail reduces the lap splice length by about 40 to 50% and simplifies the fabrication of the panel because no bars extend outside the transverse edges of the panel.

Figure 3.5.1-1. Straight-splice closure pour detail.

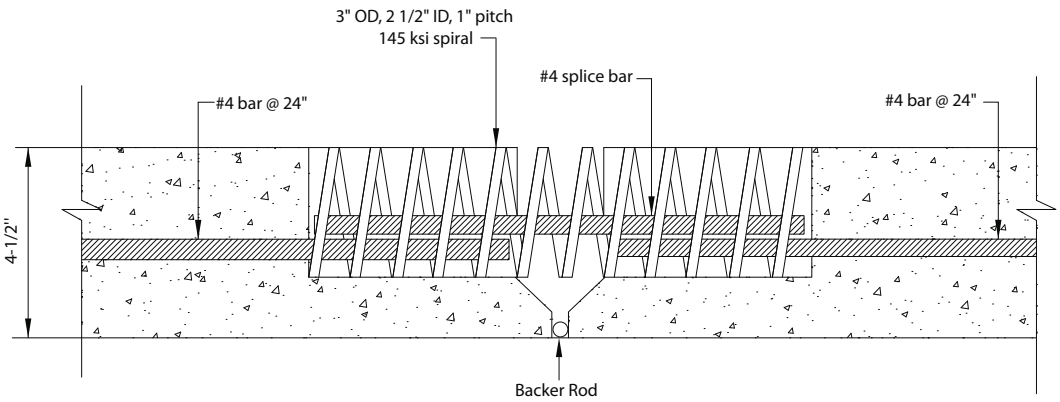

Figure 3.5.1-2. Panel-to-Panel connection using spiral confinement.

3.5.2 Post-Tensioned Longitudinal Reinforcement

Longitudinal post-tensioning has been used on the majority of bridges built with full-depth precast panels during the last 30 years. It puts the transverse panel-to-panel joints under compression, which can eliminate the tensile stress resulting from live load. Longitudinal post-tensioning is typically applied after the transverse panel-to-panel joints are grouted and have gained adequate strength, and before the panel-to-girder connection is completed. This procedure guarantees that all of the post-tensioning force is applied to the precast deck and not transferred to the supporting girders.

In many deck panel projects, high strength threaded rods or high-strength strands in round, plastic ducts are uniformly distributed across the bridge width. The tendons are fed inside the ducts that are provided in the panel during fabrication. The most appropriate size for longitudinal plastic ducts is 2⅜ in. I.D. (2⅝ in. O.D.) that can accommodate up to seven 0.6 in. diameter strands. Round plastic ducts are preferred over flat ducts to avoid difficulty in strand placement. Four-strand tendons allow each strand to be tensioned individually using lighter jacking equipment. Greater-than-four-strand tendons require multi-strand jacking equipment. After the tendons are post-tensioned and secured, the ducts are grouted with non-shrink grout to protect the tendons from corrosion. Longitudinal bar post-tensioning can be provided in stages and coupled as shown in **Figure 3.5.2-1**.

Where longitudinal post-tensioning is not required to be coupled, the ducts still must be coupled as shown in **Figure 3.5.2-2**.

Where coupling of longitudinal post-tensioning is necessary, proper detailing of ducts, anchorage zones, and blockouts is essential to the constructability and performance of the system. **Figure 3.5.2-3** shows details of a precast slab where both the duct and tendon are coupled.

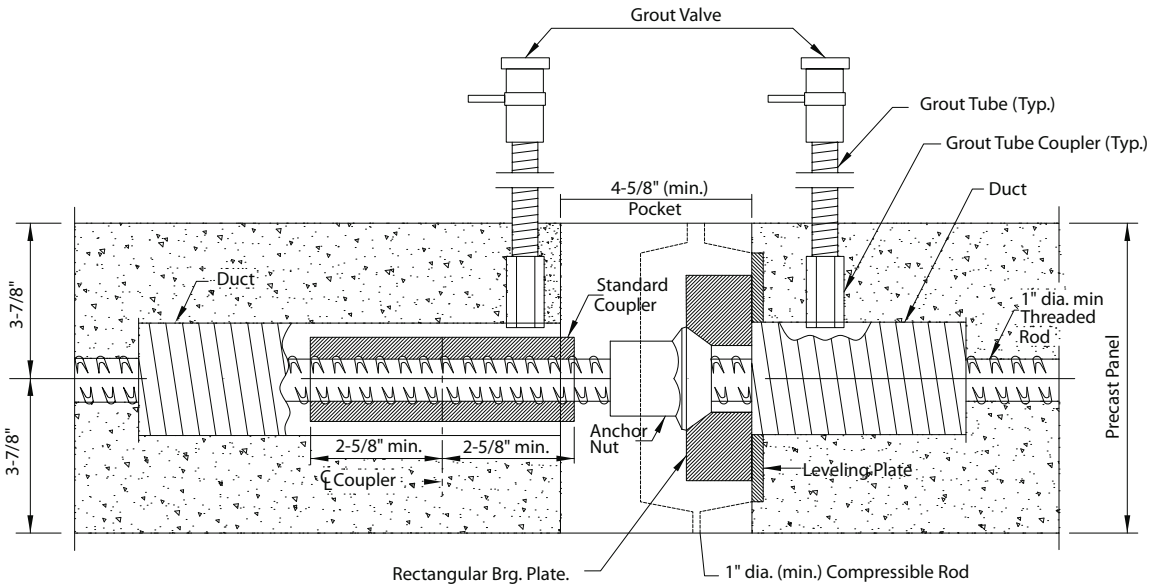

Figure 3.5.2-1. Post-tensioning detail used on Bridge-4 constructed on Route 75, Sangamon County, Ill.

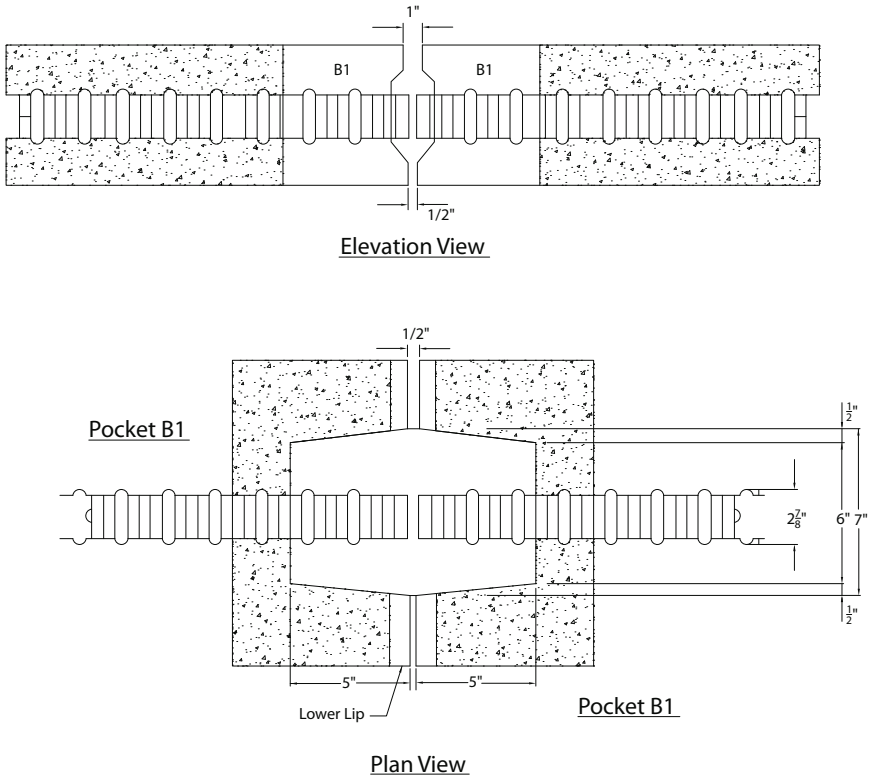

Figure 3.5.2-2. Typical layout of sheath ducts across the transverse joint.

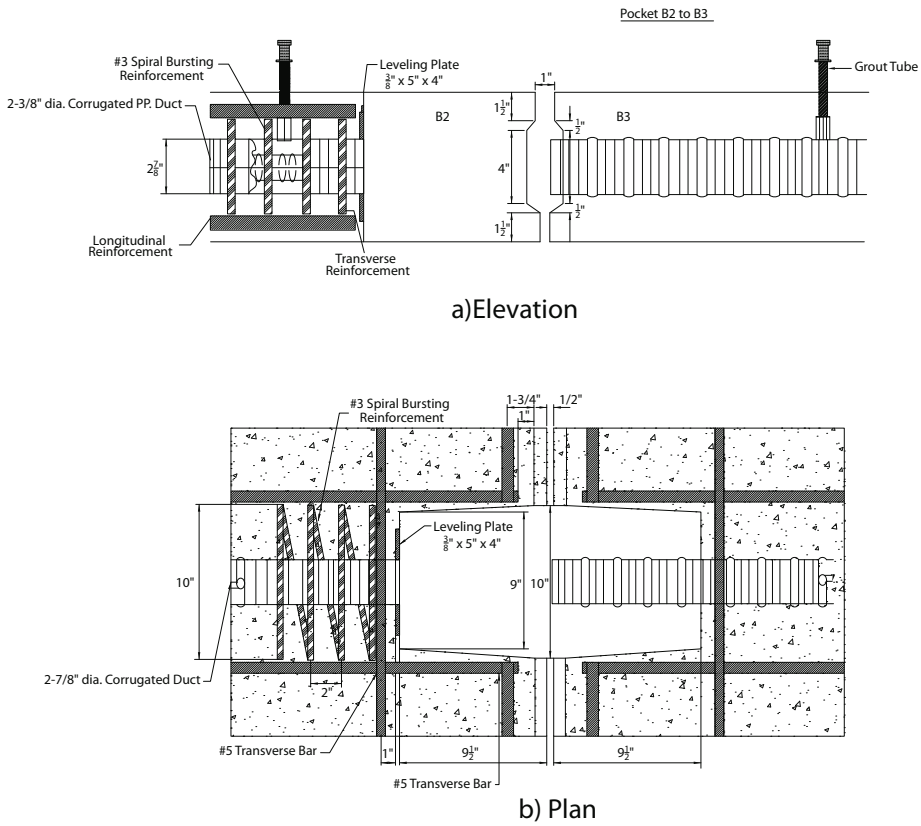

Figure 3.5.2-3. Details of the precast slab where coupling is required.

Longitudinal post-tensioning reinforcement concentrated at girder lines was used on the Skyline Drive Bridge in Omaha, Neb. **Figure 3.5.2-4** shows a view of the bridge at a girder line. There is a continuous open channel along the girder line into which the longitudinal post-tensioning strands are threaded as shown in **Figure 3.5.2-5**. The post-tensioning reinforcement comprises 16 - ½ in. diameter, 270 ksi low relaxation strands. The strands are fed in the open channels created over the girder lines and into a special end panel that houses the anchorage device as shown in **Figure 3.5.2-6**.

Figure 3.5.2-4. Open channel over girders for longitudinal post-tensioning on the Skyline Bridge, Omaha, Neb.

Figure 3.5.2-5. Strands in position in channel over girder on Skyline Bridge.

Figure 3.5.2-6. Special anchorage devices in end panel of Skyline Bridge.

3.6 Longitudinal Joints

Longitudinal joints are used when the deck cross-section width is so large that a full-width panel would exceed the necessary footprint or load capacities of available cranes. The location of the longitudinal joint also serves to establish staged construction, in situations where bridge traffic can never be detoured or closed. The solution to this problem is to split the deck panels down the length of the bridge. The cost of introducing longitudinal joints should be compared with crane capacity when bridge cross-sections exceed 50 ft. When bridges carry three or more lanes of interstate traffic, the designer should consider using longitudinal joints with full-depth precast concrete deck panel construction.

The longitudinal joint has been located and designed using two different approaches.

1. Leave open strips between deck panels that are subsequently cast with concrete. The exact strip width is determined by the lap splice requirements of the transverse mild steel reinforcement that is spliced between the adjacent deck panels. This open strip is usually located over a girder in order to use its top flange to support the bottom form, and to minimize shear force across the joint. Therefore the lap splice carries the full negative moment of the bridge deck over the joint.
2. Use a similar female-to-female detail as used in the transverse joints. There is no space to splice reinforcement between panels, so the joint is post-tensioned after it is filled with high-strength non-shrink grout. This joint can be located between the girders, such that the full positive moment of the deck is carried across the joint. The post-tensioning improves the shear resistance of the joint. If the joint opens because of live load, it will open on the bridge deck's bottom surface, thereby minimizing salt and water intrusion from the top surface. Although this configuration is more expensive, it should reduce crack openings on the top surface of the deck that would result over the girders.

CHAPTER 4 – PRODUCTION, HANDLING, AND CONSTRUCTION

4.1 REQUIREMENTS FOR PRODUCTION

There are numerous quality control checks that must be performed during the production of full-depth precast panels. These include:

- location and alignment of post-tensioning ducts
- deck thickness to satisfy cover requirements
- positioning and rigidity of the transverse shear key
- uniformity of the surface finish
- influence of shrinkage, creep, and camber on the final alignment
- location of attachments for traffic barrier service
- location and coordination of the shear pocket positioning with respect to the existing or proposed girder alignment
- accurate location of lifting hardware for handling of the deck panels
- conflicts between reinforcement, ducts, anchorages, and local reinforcement around pockets as well as the main transverse and longitudinal reinforcement. Clearances, dimensions, and tolerances must be addressed in the development of shop drawings and the setup of formwork, and then routinely verified in the pre-pour inspection phase of production as well as during the post-pour inspection. Concrete should not be deposited in the forms until the engineer and/or the QA/QC inspector has inspected and approved the placement of ducts, anchorages, and all other materials in the panels and marked as approved on each item.[29, 3]

In many situations the precaster may identify special reinforcement that should be placed in the panels to facilitate handling and/or erection. Some panels that have been used in previous projects developed cracks, before installation, between blocked out pockets and the panel edge when pockets were close to the panel edges. These cracks may have resulted from stress concentrations around pockets during handling. Additional reinforcement may also be desirable near lifting inserts. The precaster should communicate with the design engineer when special handling reinforcement is desired that is not shown in the project plans.

Methods for lifting the deck panels should be shown on the shop drawings. Any steel lifting embedments in the panel should be recessed at least 2 in. If they protrude from the surface, they must be installed in a 2 in. minimum recessed pocket and cut off flush with the bottom of the pocket after the panel is placed. The recess should then be grouted flush with the deck surface. Alternative lifting methods should be submitted for approval prior to use. Tolerances for casting the slabs should be included, especially in the location of longitudinal post-tensioning ducts when duct splices may be needed between panels. The ducts should be oversized to accommodate the specified tolerances. The precast concrete slabs should be fabricated to plan dimensions within the tolerances listed below (notation illustrated in **Figure 4.1-1**):[30]

a = Width ..... ± ¼ in.
b = Length ..... ± ¼ in.
c = Depth ..... +¼ in., -⅛ in.
d = Variation from specified plan end squareness or skew ..... ± ¼ in.
f = Sweep ..... ± ⅛ in.
k_1 = Location of strand perpendicular to plane of panel ..... ± ⅛ in.
k_2 = Location of strand parallel to plane of panel ..... ± ¼ in.

Precast deck panels should be produced and placed such that there is no more than ¼ in. difference in elevation between the top surfaces of adjacent slabs. The cumulative length along the span should be checked throughout erection, and joint spaces adjusted so that the proper span length is achieved.

Panels that exhibit minor damage during production, handling, transportation, or storage, should be evaluated for repair in accordance with PCI Manual 137, *Manual for Evaluation and Repair of Precast, Prestressed Concrete Bridge Products*.

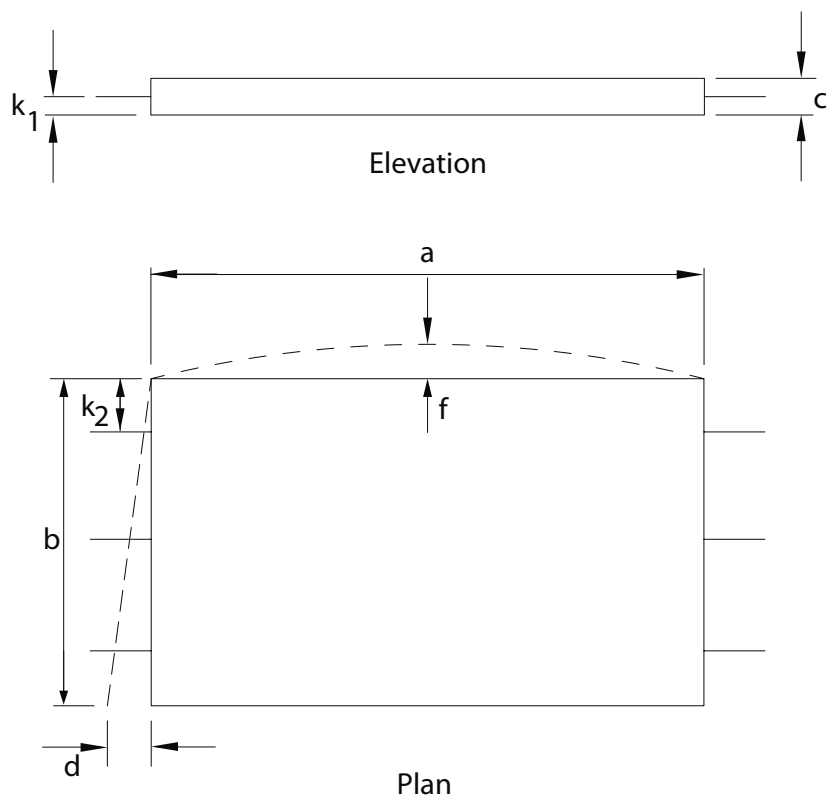

Figure 4.1-1. Precast deck panel production tolerances.

4.2 HANDLING

The loads and forces on the precast, prestressed slabs during fabrication, transportation, and erection require separate analyses because the support points and orientation are usually different from when the panel is in its final position. Also, panels may need to be analyzed to support the crane and other construction loads as other panels further out in the span are installed. Several factors must be considered to select the most feasible manner of furnishing the concrete panels for a project.[28] These factors can be summarized as follows:

- Stability and stresses on the concrete element during handling
- Transportation size, weight regulations, and equipment restrictions
- Available crane capacity and rigging at both the plant and the project site; position of the crane must be considered, since capacity is a function of reach

Improper jobsite handling and storage of the relatively thin precast sections required for modular bridge deck construction or replacement can lead to dimensional instability, cracking, or warping that will adversely impact the panels' suitability for placement in the new superstructure. The contractor should consider proper lifting techniques and blocking configurations necessary if jobsite storage will be required prior to slab installation. If jobsite storage is required, the site should be carefully chosen and set up so that varying weather conditions do not lead to settlement problems. Once the dunnage is set up, periodic elevation checks should be performed for verification that no settlement problems have occurred. Supplemental blocking materials for stacking panels more than one panel high should be provided in square dimensions (e.g., 6 x 6 not 4 x 6) so that an individual piece may not be turned improperly and create a point load in a precast panel. Special attention must be given to irregularly shaped pieces or any section that might have a crown.

4.3 CONSTRUCTION OPERATIONS

The contractor is responsible for all the operations required for the installation of the panels. The contractor should schedule operations so that interference with the normal movement of traffic is kept to a minimum.[31, 32, 33]

4.3.1 Installation of Shear Connectors

The method for installing shear connectors is dependent on the type of construction and the type of girder. For new bridge deck construction on steel girders, it is common to use shear studs that are installed on the girder before delivery to the construction site, (provided appropriate fall-prevention measures are followed). If pockets are provided in precast panels, shear studs may also be welded to the steel girders on-site after the panels are in place. For new bridge deck construction on concrete girders, it is common to use the girders' shear reinforcement, which is extended up from the web through the top flange as L-bars or hairpin bars, for the horizontal shear reinforcement. On rehabilitated bridges, the existing shear reinforcement is typically cut off prior to panel installation. Shear reinforcement is then field-installed on the existing girders in the location of the panels' shear pockets. Issa[15] reports that shear stud bolts can be attached to concrete girder flanges by drilling holes in the existing girders, then anchoring the bolts in the holes with an approved adhesive.

4.3.2 Panel Installation Details

The use of continuous structural angles as supports between the top of new or existing girders and the underside of the new precast deck panels is one method of elevation control that addresses support and leveling requirements. These structural angles also provide the formwork needed for the CIP haunches and pockets after the panels have been set (**Figure 3.3.1-6**). The sizing of the structural angles is a function of the calculated distances between the top of girder and the underside of deck panel, as well as the weight of the panel and any construction loads. The contractor's installation method must also be considered. An increase in angle weight may be required if the contractor elects to construct the bridge without equipment below the bridge (top-down construction method), where construction loads are significant.

The top-of-girder elevations are critical in the installation of the structural angles. It is recommended to check elevations twice prior to the installation of the structural angles, and a supervisor should perform an "eyeball check" prior to slab installation so as to identify any deviations from a smooth profile in the structural angle assemblies. It is important to remember that the roadway surface cannot be any smoother than the structural angle supports. Any profile grinding after slab placement is used primarily to remove surface irregularities associated with the CIP grout material between individual precast panels.

In addition, properly installed structural angles will minimize the occurrence of "hard point" bearing areas for the slab prior to the placement of the grout material in the haunch area. The grade points for the structural angles should be located at joints between deck panels.

Leveling bolts are another proven method of elevation control for precast deck panels. One major advantage of using leveling bolts for elevation control is that fine elevation adjustments are possible at any time during construction until the grout material is placed in the haunch area. As discussed earlier in this report, each bolt should be installed with a calibrated torque wrench to insure that there is approximately equal loading on each leveling bolt, providing uniform load distribution to each girder. The use of leveling bolts requires access under the bridge to install and remove the formwork for the grout material. Also additional inserts and grouting at the top of the deck are required to cover the shear stud pockets.

Regardless of which method is incorporated for elevation control and temporary slab support, girder deflection issues must be carefully considered. When the construction allows complete spans of deck panels to be erected, post-tensioned, and grouted in a continuous operation, the deflection accommodation is relatively simple. The top of girder elevations are determined and all of the support angles for that span are set and checked prior to the setting of any deck panels. If leveling bolts are used instead of support angles, the procedure is the same except that dimensions are marked on the girders for the amount of support height required for each panel corner. The important concept here is that all of the top-of-girder elevations are determined prior to the setting of any panels. It should also be noted that the top-of-panel elevations will not be as planned until all of the panels have been installed in the span, since the planned dead load deflection is based on a fully-decked span.

In a rapid deck replacement project, where long spans may not be completely replaced in a continuous operation, and traffic is to be maintained during non-working periods, the deflection accommodation is somewhat more difficult. The deflection accommodation becomes a "balancing act" between the dead load of the portion of the existing deck which remains, the dead load which has been removed because of the partial existing deck demolition, and the anticipated deflection due to the installation of the new deck panels. The field engineer would

have to be aware of the amount of deflection that would be expected to occur as the remaining panels in a given span were erected, and add that amount of deflection to the theoretical setting elevation of the current panel. Essentially, the field engineer has to be aware of where the span is in the development of its dead load deflection at any point during the erection process. While the setting elevation of the last several panels in a span might be relatively equal to their finished elevation, the setting elevation of the first several panels might be considerably higher than their elevation after all of the remaining panels in that span are erected.

For long spans, differential deflections between exterior and interior girders should require additional consideration. The post-tensioning (if specified) and the installation of the grout material in the haunches must not be performed until all of the panels in a given span have reached their planned deflection.

4.3.3 Cross Slopes and Crowns

Cross slopes can be created by either varying the elevation of the girders or by varying the haunch depth across the girder lines. Crowns can be created in several ways. One approach is to screed the top panel surface to the required crown alignment. This is only suitable for relatively narrow bridge widths. Otherwise, the deck panel can be significantly thicker at the crown than at its ends. Another approach is to form the crown in the plant by creating an internal hinge in the panel that enables the panel to rotate under its self-weight. This detail was used on the Skyline Bridge and more information on this project can be found in Appendix C. In bridges with a longitudinal joint, the crown is preferably formed utilizing flat panels with the crown at the joint.

4.3.4 Construction Loads on Precast Panels

Construction using precast panels requires lifting equipment to place the panels. The lifting equipment can be placed on the bridge if the bridge strength and width can accommodate it. Cranes and other heavy equipment should not be allowed on the bridge if they impose structural overloads that cause damage to the bridge. Right-of-way limitation and other non-structural conditions could also significantly control the placement of the lifting equipment, such as power lines, etc. In most cases, heavy lifting equipment has not been allowed on the precast deck panels until the haunch between the panels and the girders has been grouted and cured.

4.3.5 Transverse Joints

The most common type of transverse joints between the precast panels is a female-to-female (shear key) joint and has a minimum nominal width of approximately 1 in. at the top and ½ in. at the bottom (**Figure 3.4-2**). The width of this joint may be adjusted in the field by ±¼ in. to account for tolerances. The opening should be enlarged at duct locations to allow for coupling the ducts. Often duct coupling occurs after tendon placement to facilitate tendon installation. The key spaces and recesses between the precast slabs must be thoroughly cleaned out and water-blasted. A wooden form or backer rod is installed at the bottom of the two adjacent slabs prior to placing the concrete or grout closure pour. If the top surfaces of adjacent precast slabs do not match, the transverse joint should be sloped to form a smooth transition.

Another form of transverse joint between precast panels is the full match-cast (male-to-female joint) shear key (see **Figure 3.4-1**). The full match-cast surfaces of the concrete segments should be coated with a form-release agent to facilitate separation of the two segments after concrete hardening. The form-release agent and any laitance at the match-cast faces should be removed. Air pressure and sandblasting should be used to remove clinging dust particles to assure clean

surfaces prior to application of epoxy on each side of the joint to bond the joint. The epoxy thickness of ⅛ in. on one side or $^{1}/_{16}$ in. on each side of the joint is needed to bond the joint on the bridge.

4.3.6 Surface Preparation and Curing for CIP Grout Material

It is important to exercise care in the mixture and placement of the grout material in the joints. Exposed areas of slabs to be incorporated in the grout area should be water-blasted in the field just prior to installation of the grout material. Water blasting removes any deleterious material, and helps proper moisture impregnation of the exposed surfaces for bonding with the grout material.

It is very important to prevent premature grout moisture loss and maintain adequate temperature during the curing period. The objective here would be to utilize a material with a curing time period in the range of hours and not days, so that traffic could be placed on the deck in a very short period of time.

4.3.7 Post-Tensioning

After the panels are set into position and leveled, the post-tensioning ducts between panels are mechanically connected and sealed water-tight. Concrete or grout is then placed in the transverse panel joints and allowed to cure. It should be clearly stated in the specifications whether construction equipment or vehicles are allowed on the precast deck slabs prior to completion of the post-tensioning process.[34]

Once the concrete or grout between the precast slabs has attained the required compressive strength (minimum 4.0 ksi), the longitudinal post-tensioning tendons can be tensioned. The duct, post-tensioning threaded bars and/or strands, and other components must be completely free from oil, grease, and foreign material. The tendons are then installed, tensioned, and grouted to a pressure in accordance with the specifications. This process provides the post-tensioning steel with multiple levels of corrosion protection for the longer structural lifespans now being required for new and rehabilitated bridge structure projects. Some DOTs have considered two levels of corrosion protection for the prestressing steel (in addition to the concrete in the panels):

- waterproof duct
- the non-shrink, zero bleed grout within the conduit totally encapsulating the post-tensioning steel

After post-tensioning the tendons and grouting the ducts, the panels' shear pockets are filled with concrete or grout to make the deck panels composite with the girders. This construction sequence allows the post-tensioning stresses to distribute through the panel without transferring prestress force to the girders through the shear studs.

The contractor's designer or construction engineer must provide design computations that include the following information:

- losses for each tendon such as creep and shrinkage of concrete, elastic shortening, relaxation of steel, losses due to the sequence of tensioning, friction and anchor set, and other losses peculiar to the method or system of prestressing that may take place or have been provided for
- jacking and effective force for each post-tensioning strand or bar system

- anchorage bearing stress at service load
- all other computations required for the system of post-tensioning being used, including all reinforcement required to resist local bursting zone stresses

4.3.7.1 Premixed, Pre-Packaged Grout in Post-Tensioning Ducts

Most problems with post-tensioned projects have been related to grout. The post-tensioning industry and the grout manufacturers in conjunction with the State DOTs have developed grout materials with virtually no bleed or shrinkage. Post-tensioned projects should use premixed, pre-bagged grouts.

At the time of this publication, several different premixed, pre-bagged grouts have been developed specifically for grouting post-tensioning tendons, and are listed below. These grouts have zero bleed after 3 hours and a minimum 7.0 ksi - 28 day compressive strength.

- Masterflow 1205 (Cable Grout) by ChemRex
- Sika Cable Grout By Sika Corporation
- Sikagrout 300 PT Sika Corporation
- Euco Cable Grout PTX By Euclid Chemical Co
- DSI DYNA Grout By DSI USA INC
- Special Grout 400 BY Five Star Products

4.3.7.2 Post-Tensioning Reinforcement

The post-tensioning steel commonly used in precast bridge deck panels includes:

- grade 150 ksi steel bars 1in., 1 ¼ in., 1 ⅜ in. and 1 ¾ in. diameter conforming to ASTM A722 with bar deformations meeting ASTM A615 specifications
- grade 270 ksi steel strand using ½ in. or 0.6 in. diameter, seven-wire low relaxation strand conforming to ASTM A 416 specifications

The bar post-tensioning reinforcement provides the additional flexibility of allowing phased construction sequencing. The first phase can be placed, tensioned, and grouted completely. At a later time, a second phase of construction can be made continuous with phase one by coupling a new tendon to the phase one bar. This gives the contractor added flexibility, particularly with rehabilitation projects.

The strand post-tensioning reinforcement provides the economics of using 270 ksi steel in lieu of 150 ksi steel for bar tendons. Strand tendons are more tolerant of duct misalignment between the panels. They can be installed in longer lengths which reduces the number of anchorages required on the project. In some instances strands may be chosen for phased construction with the use of strand couplers.

4.3.8 Barrier Rails

There are two common methods for constructing barrier rails on precast panels. One method is to extend the deck panels' bottom reinforcing steel up through the panel to tie down the barrier, as in CIP deck construction. The reinforcing steel extending out of the panel prevents the precaster from stacking panels prior to shipment. Another method that has been suggested is to place inserts for threaded dowel bars in the barrier footprint of the deck panel, which would allow high-strength threaded rods to be screwed into these inserts and used as the main reinforcement to support a precast or CIP rail.

Barrier rails are required to be approved by the Federal Highway Administration (FHWA) which has established several levels of capacity based on crash testing. This subject is beyond the scope of this report.

Precast barriers have been installed on several precast bridge deck panel projects to facilitate rapid bridge deck construction.

4.3.9 Construction Timing

One major advantage of rapid deck construction or replacement is the minimized impact to the traveling public. Construction limited to non-peak periods (nighttime, weekends, or non-rush hour periods) improves safety to the public and workers and relieves traffic congestion.

When a deck replacement involves maintaining traffic on an existing structure, weekend closures would be the least disruptive to the traveling public and most productive for the contractor. Nearly seven 8-hour shifts could be worked between midnight Friday evening and 6:00 a.m. Monday morning. The task of protecting existing girders where necessary and removing the existing deck and barrier could well be the most time consuming stage of the entire operation. It is feasible that the first several shifts of a weekend cycle would be devoted entirely to demolition and removal operations, with the remaining several shifts dedicated to installation, post-tensioning, and grout installation of the new prestressed deck panels. Therefore, fewer long-duration (full weekend) bridge closures are preferred over a greater number of short duration (single night, or day time) lane closures.

Demolition has historically been considered a field problem, and as such receives little consideration during initial planning and design. Demolition operations are an integral portion of the big picture when contemplating the rapid replacement of an existing bridge deck.

4.3.10 Patching of Lifting Device Access Pockets

There are a number of different lifting methods used including various proprietary devices and prestressing strand. These will all have some type of recess that will need to be patched if exposed in the final construction. The method of patching also varies and must be done using proper materials consistent with good practice.

4.4 Wearing and Protection Systems

When using full-depth precast bridge deck systems, bridge engineers and owners generally agree they need to provide a smooth riding surface, enhanced protection against the intrusion of chlorides, and a skid-resistant surface. Several approaches have been used to achieve these goals. These are discussed in this section.

4.4.1 Types of Wearing and Protection Systems

Five common types of wearing and protection systems are introduced in this section. These include low permeability concrete panel, low permeability concrete panel with monolithic sacrificial overlay, polymer overlay, thin bonded concrete overlay, and asphalt overlay with membrane. Each type is further discussed in Sections 4.5.2 and 4.5.3.

The use of low permeability concrete in the precast deck panels is by far the most practical and economical of the wearing and protection systems for deck panels that are prestressed (pretensioned or post-tensioned) transversely and longitudinally. The use of concretes with low

water-cementitious materials ratios and pozzolans or slag are projected to provide a service life of more than 150 years.

For precast panels on which a sacrificial concrete overlay is desired, the monolithic concrete wearing and protection system is by far the most practical and economical. The panel thickness is increased to accommodate the top sacrificial over-depth. After the top sacrificial surface becomes contaminated with chlorides, this sacrificial surface can be milled off and replaced.

For situations where an impermeable layer on the deck surface is desired, the thin epoxy overlay wearing and protection system is the next most practical. The low cost and ease of maintenance and replacement make it ideal for precast deck panels.

Thin bonded hydraulic cement concrete overlay and the waterproof membrane overlaid with asphalt concrete could be used when the owner requires that the deck panel system have an overlay for corrosion protection and to achieve the desired ride quality. These protection systems are the most complicated and expensive and may require future maintenance repairs and replacement and should be used only when the lower-cost alternatives are not desirable.

4.4.2 Comparison of Systems

Other deck wearing and protection systems include the thin bonded hydraulic cement concrete overlay and the waterproof membrane overlaid with asphalt concrete. These wearing and protection systems are complicated, expensive, and may require increased maintenance and replacement during the service life of the bridge deck. Less expensive systems that have been successfully used include a thin polymer concrete overlay, and low permeability precast decks with and without a monolithic sacrificial wearing surface and additional cover over the reinforcement to allow grinding for smoothness. These less expensive systems should help facilitate rapid construction.

Sprinkel[35] investigated deck wearing and protection systems used on bridges constructed with precast concrete deck panels. Information on the design, construction steps, cost, and performance of the systems mentioned in the previous section was obtained.

Sprinkel[35] compiled cost data based on bid tabulations in Virginia between 1999 and 2002 and compared the deck wearing and protection systems. The data was obtained from the Virginia Department of Transportation bridge office in Richmond, Va. The data is for wearing and protection systems used on many types of bridges with concrete decks (CIP concrete on beams, prestressed box beams, prestressed slabs, post-tensioned segmental, etc.). While the cost of a wearing and protection system varies with location, access, bridge design, and material quantity, the relationships between the costs of the systems should reasonably approximate most situations.

A sketch of the six systems is shown in **Figure 4.4.2-1** with construction steps for the six systems shown in **Table 4.4.2-1**. Average cost data based on bid tabulations in Virginia is shown in **Table 4.4.2-2** along with life cycle cost estimates (based on an assumed 30 year life cycle). A zero interest rate was used in the life cycle cost estimates.

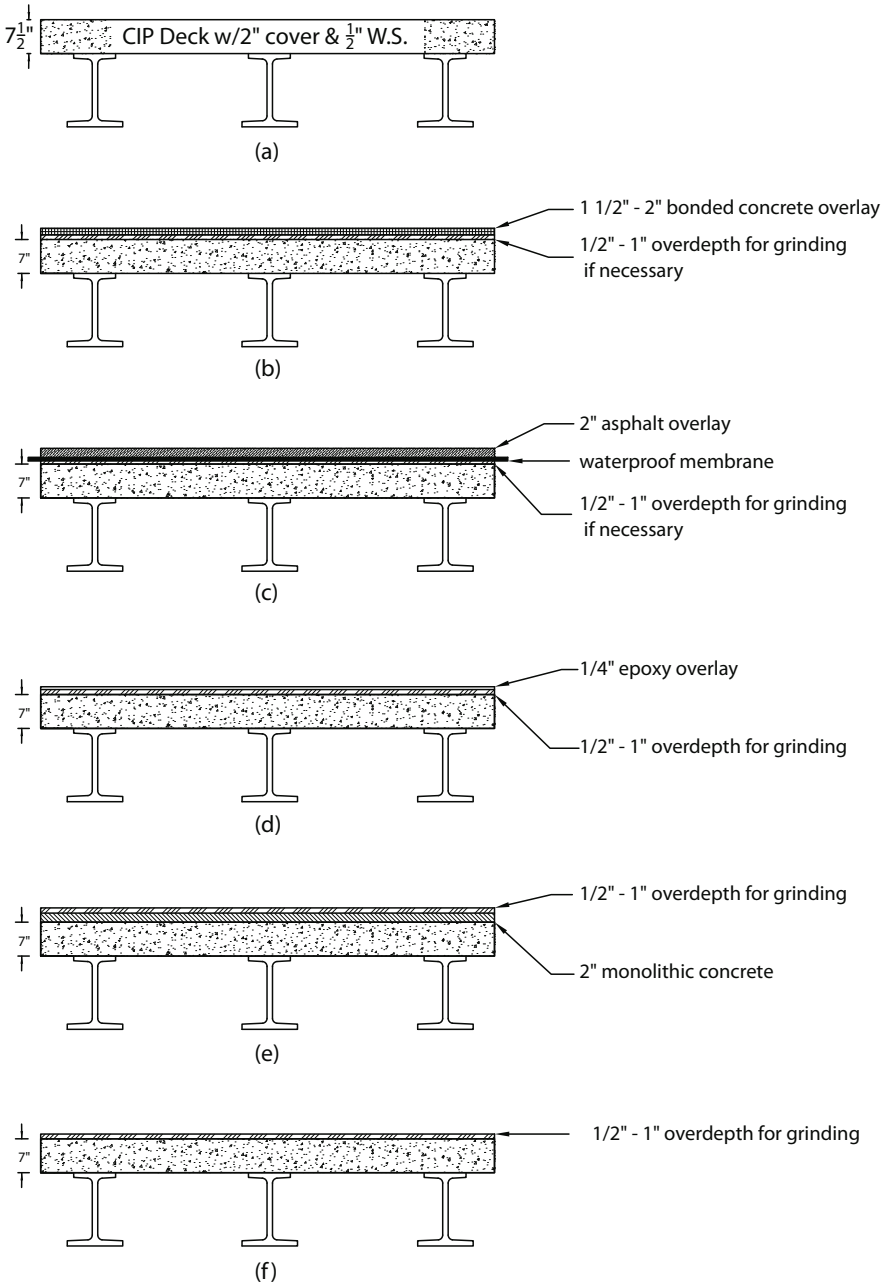

Figure 4.4.2-1. Wearing and protection systems include: (a) typical CIP deck (reference), (b) bonded concrete overlay, (c) waterproof membrane overlaid with asphalt, (d) epoxy overlay, (e) monolithic concrete overlay, (f) low permeability panel with no overlay.

Table 4.4.2-1. Construction steps for wearing and protection systems.

Strategy	Construction Steps	Total Steps
Thin Bonded Concrete Overlay	Install Slabs, Grind Surface, Shot blast Surface, Place Concrete Overlay, Cure Concrete Overlay, Groove Surface	6
Membrane/Asphalt Overlay	Install Slabs, Grind Surface, Place Membrane, Place Asphalt	4
Thin Bonded Epoxy Overlay	Install Slabs, Grind Surface, Shot blast Surface, Place Epoxy Overlay	4
Monolithic Concrete	Install Slabs, Grind Surface, Groove Surface	3
Low Permeability Concrete	Install Slabs, Grind Surface, Groove Surface	3

The service life of a deck wearing and protection system is critical information necessary for a life cycle cost analysis. Unfortunately, reaching a consensus on service life is difficult if not impossible. Consequently, the service life values used to compare the deck protection systems shown in **Table 4.4.2-2** are estimates that represent more than 30 years of experience with these systems.

Table 4.4.2-2. Cost of wearing and protection systems for precast deck slabs ($/yd^2), (2006).

Strategy	Grinding	Shot Blast	Protection	Skid	Initial	Life, yrs.	Life Cycle
Low Permeability Concrete (90 year life)	6	0	0	6	12	90	4
Monolithic Concrete (30 year life)	6	0	24	6	36	30	36
Monolithic Concrete (90 year life)	6	0	24	6	36	90	12
Thin Bonded Epoxy Overlay (15 yr. Life)	6	6	21	0	33	15	60
Thin Bonded Epoxy Overlay (30 yr. Life)	6	6	21	0	33	30	33
Thin Bonded Concrete Overlay	6	6	62	6	80	30	80
Overlay	6	0	27	18	51	15	96

4.4.3 Details of Systems

4.4.3.1 Low Permeability Concrete Panels

This system utilizes a precast concrete deck panel cast from low permeability concrete. The panel's depth includes the AASHTO minimum 2 in. cover and ½ in. to 1 in. of sacrificial over-depth concrete for surface grinding with no additional overlay. The panel is then grooved to provide skid resistance if it is necessary.

Most reports on time for corrosion of reinforcement in decks are based on experiences with older conventional bridge decks that were typically constructed with portland cement and a water-cement ratio of 0.45 or higher. The low permeability concretes currently being used to construct precast concrete deck panels have a significantly higher resistance to the penetration of chloride ions and moisture than the concretes in older decks. **Table 4.4.3.1-1** shows the permeability to chloride ion at 1 year of concrete deck mixtures.[36] Mixtures with pozzolans and slag and water-cement ratios of 0.35 to 0.4 have permeability to chloride ion that is approximately one-fourth to one-tenth that of mixtures with portland cement and a water-cement ratio of 0.45. The diffusion constant for the conventional deck concrete was 5 x 10^{-8} cm^2/sec.[36] The diffusion constants for the low permeability concretes were 0.2 to 1 x 10^{-8} cm^2/sec.[36] The diffusion constants for the low permeability concretes are approximately one fifth to one twenty-fifth of that of the conventional deck concretes. Chloride corrosion induced spalling could be expected in these older decks in approximately 37 years.[37] Precast deck systems constructed with low permeability concrete (water-cement ratio of 0.35 to 0.4 and pozzolans or slag) and free of cracks can expect to be free of chloride corrosion induced spalling for 4 to 10 times longer. Precast deck panels with low permeability concrete that are pretensioned and/or post-tensioned and therefore free of cracks should not have chlorides present in sufficient quantities to cause corrosion of reinforcement with a 2 in. cover for 150 to 370 years. The use of a protection strategy other than casting the precast deck panels with low permeability concrete is difficult to justify for deck panels that are pretensioned and/or post-tensioned. As shown in **Table 4.4.2-2** the additional cost for diamond grinding for ride quality and saw-cut grooves for side resistance is only \$6 per yd^2 (2006 dollars).

Table 4.4.3.1-1. Permeability to chloride ion at 1 year, coulombs (AASHTO T277).

WATER-CEMENT RATIO	0.45	0.40	0.35
PORTLAND CEMENT	3200	2500	1700
5 PERCENT SILICA FUME	1000	800	500
24 PERCENT FLY ASH	500	500	300
50 PERCENT SLAG	900	800	700

4.4.3.2 Monolithic Sacrificial Concrete Overlays

The monolithic concrete overlay wearing and protection system is another low-cost alternative to the conventional protection systems. The system involves casting an additional 2 in. of concrete to the specified minimum cover at the time the deck panels are cast. After all of the deck panels are installed, a diamond grinding machine is used to grind the entire surface to correct surface irregularities and provide the specified deck profile. Good skid resistance is obtained when diamond grinding is used over the entire surface of the deck, so saw-cut grooves may not be required. Elimination of saw-cut grooves would save $6 per square yard, (as indicated in **Table 4.4.2-2**), as well as significant construction time. Assuming $150 per cubic yard material cost, a 2 in. thick monolithic concrete overlay would cost approximately $8 per square yard. Diamond grinding and saw-cut grooves would each add another $6 per square yard for a total of $20 per square yard (see **Table 4.4.2-2**). Note that SKID in **Table 4.4.2-2** is the same as saw-cut grooves.

The monolithic hydraulic cement concrete overlay wearing and protection system can be expected to protect the deck as long as or longer than a quality thin bonded hydraulic cement concrete overlay. At 30 years, if the top 2 in. of the monolithic concrete accumulates sufficient chlorides to warrant renewal and replacement, a thin bonded cement concrete overlay can be placed at that time. However, because of the low permeability that is achieved with today's concretes that are prepared with low water-cement ratios and pozzolans or slag, it is reasonable to expect that the monolithic concrete would not contain sufficient chloride ions to warrant removal for more than 150 years (see Section 4.5.1.)[36] The higher the quality of the concrete, the lower the life cycle cost. For example, if the monolithic hydraulic cement concrete is replaced at 30 years, (same age as the thin bonded concrete overlay) the life cycle cost is $20 per square yard. If replaced at 60 years, the life cycle cost is $10 per square yard and if it lasts 90 years, it is only $7 per square yard. The monolithic concrete overlay wearing and protection system is the most durable since the concrete is cast onto the precast panel as they are fabricated. The problems with the overlay delaminating and cracking are eliminated.

4.4.3.3 Thin Bonded Polymer Concrete Overlays

Polymer overlay is a deck protection system that has been used successfully since the early 1980s on conventionally-reinforced CIP concrete bridge decks. Polymer overlays are typically epoxy (¼ in. to ⅜ in. thick), methacrylate (⅜ in. thick), or polyester (½ in. to ¾ in. thick). The polymer overlay has been shown to prevent the infusion of the chloride ions and can be expected to provide a skid-resistant wearing and protection system on decks for 15 to 30 years depending on traffic volume.[26] The polymer overlay is expected to perform equally as well on precast deck systems. The overlay is easily applied. Following profile grinding, the surface is shot blasted and the polymer overlay is installed. The average cost in Table 4.2 for epoxy overlays includes grinding and shot blasting. The epoxy overlay costs between $60 and $33 per yd^2, depending on whether the epoxy overlay is intended to last 15 or 30 years. An additional benefit of the polymer overlay is that it is only ¼ in. to ¾ in. thick and if spalling occurs it does not have a major impact on the ride quality and repairs are easily made. By comparison, the spalling of an asphalt overlay leaves a much deeper hole. The thin polymer overlay is less likely to crack and/or delaminate than a hydraulic cement concrete overlay. The polymer overlay is flexible and will not likely crack and/or delaminate over the joints between the deck panels. AASHTO guide specifications for the thin bonded polymer overlay were published in 1995.[26] For added protection, a layer of polymer could be placed over grouted areas prior to placing the polymer overlay.

4.4.3.4 Thin Bonded Concrete Overlays

The thin bonded concrete overlay system applies a 1¼ in. to 2 in. thick CIP concrete overlay on top of the precast deck panels. Many combinations of cementitious materials can be used in thin bonded overlays. The most common are latex modified concrete and silica fume concrete. These overlays may require profile grinding before adding the overlay to remove any elevation differences in the deck panels. Additionally, skid resistance is provided by saw-cut grooves.

Thin bonded concrete overlays are the most expensive deck wearing and protection system based on initial cost. Cost data for this system in **Table 4.4.2-2** indicate the average life cycle cost of a bonded concrete overlay including grinding, surface preparation, and saw-cut grooves is $80 per square yard. Properly constructed, thin bonded concrete overlays can last 30 years or more. Unfortunately, some overlays have cracked and delaminated and had to be replaced before the bridge was opened to traffic. Good surface preparation, low shrinkage concrete mixtures, and good curing are required for successful thin bonded overlays. Factors that can contribute to premature delamination of the overlay include poor surface preparation, use of mixture proportions with high shrinkage, use of thick overlays, early shrinkage cracking in the overlay, and creep and shrinkage of the newly-constructed precast panel deck system. While some long-lasting overlays have been successfully constructed, they come with a high initial cost and may require maintenance and replacement during the service life of the bridge deck. Thin bonded concrete overlays may be used when the precast deck system requires an overlay for deck protection and appropriate ride quality and lower cost alternatives are not acceptable to the owner.

Latex-modified concrete is prepared by adding liquid styrene butadiene latex to conventional concrete.[38] A typical latex modified concrete mixture contains 658 lb of cement per cubic yard, 15% latex solids by weight of cement, and has a maximum water-cement ratio of 0.40. The latex modifies the pore structure of the concrete and reduces its permeability. Rapid chloride permeability testing on latex-modified concrete shows it to fall consistently into the very low range (below 1000 coulombs) [AASHTO T 277, ASTM C1202]. Latex modified concrete is comparable in cost to silica fume concrete, but it does require special equipment to apply it. Latex modified concrete has been used extensively in Virginia for rapid-set overlays. Use of Latex Modified Concrete-Very Early (LMC-VE) overlays has increased since its first use in 1997. The very early strength cement is more expensive; but the overlay can be opened to traffic with only three hours of curing. Consequently, traffic delays and the cost of traffic control are significantly reduced, which can make the overall cost of this system competitive with other overlay systems.

Typical silica fume concrete mixtures contain 658 lbs of cement per cubic yard, 5 to 7.5% silica fume by weight of cement, a maximum water-to-cementitious materials ratio of 0.40, and enough High Range Water Reducing Admixture (HRWRA) to provide a 6 to 8 in. slump.[39] One of the biggest advantages of micro silica concrete overlay is its reduced permeability to chloride penetration. Silica fume will require fogging until the curing system is in place.

4.4.3.5 Waterproof Membrane Overlays with Asphalt

A waterproof membrane overlaid with asphalt is the second most expensive deck protection system based on initial cost. Cost data for this system in **Table 4.4.2-2** includes a membrane and 2 in. to 3 in. asphalt, as well as grinding. The life cycle cost is $96 to $69 per square yard depending on whether the membrane is replaced at 15 or 30 years of life. The installed membrane accounts for most of the cost, and it is the primary corrosion protection element of

this system. The asphalt overlay protects the membrane and provides skid resistance. As with the thin bonded concrete overlay, profile grinding on this system may be necessary to remove surface irregularities, prior to membrane installation. Better performance using this system has occurred using a 3 in. thickness in Europe and Japan (see Appendix C).

A properly-installed membrane and rut-resistant asphalt are required for a successful overlay system. The risk of early failure is high because of the complexity of the construction procedures. Rutting and shoving of the asphalt overlay can also be a problem. Replacement of the overlay every 10-15 years can be expected. The membrane typically has to be replaced when the overlay is replaced. A 3 in. asphalt overlay system will allow the placement of a thin intermediate layer of asphalt on the membrane followed by a surface mix. The surface mix may be replaced without replacing the intermediate mix and the membrane. The life cycle cost would be less if the asphalt overlay can be replaced without damaging and replacing the membrane. A waterproof membrane overlaid with asphalt may be used when the precast deck system requires an overlay for deck protection and appropriate ride quality and lower cost alternatives are not acceptable to the owner.

4.4.4 Surface Preparation for Overlays

An overlay surface that is well-bonded and relatively crack free is recommended to protect the underlying segments. It is intended that the overlay be removed and replaced when it becomes loaded with chloride ions from deicing salt or if extensive cracking or delamination occurs. The best surface preparation technique is the use of water jet blasting for latex-modified concrete (LMC) and microsilica concrete (MSC) and sandblasting or shot blasting for thin epoxy bonded overlays.

4.4.5 Profile Grinding

One major advantage of profile grinding the final roadway surface to satisfy rideability requirements is that weather issues do not come into play. Profile grinding eliminates the weather, curing, workmanship, and ready-mix consistency issues commonly associated with full surface overlays. Many states are utilizing profile grinding to improve the rideability of existing rigid pavements. If the technology were applied to new prestressed deck panels, extremely smooth riding surfaces would be achieved and seamless transitions would be made between panels across the CIP grouted joint areas. Generally, no further texturing should be required as the necessary skid resistance is provided by the longitudinal “corduroy” type surface that is left after the grinding operation. The micro-cracking that occurs during a typical “milling” operation does not occur during profile grinding because the concrete is “wet-cut” with special diamond blades and not fractured away with carbide inserts. A typical diamond profiling machine weighs approximately 40,000 lbs and surfaces an area between 36 and 48 in. wide per pass at ¼ in. deep. A typical production rate for one machine would be approximately 100 square yards per hour. The cost of profile grinding will vary from between $4 to $15 per square yard based on the geographic location. The variance in price is primarily due to the hardness of the native coarse aggregate found in different parts of the country. The harder the coarse aggregate, the higher the price.

4.4.6 Considerations for Rapid Construction

The low permeability concrete deck panel overlay option and the monolithic concrete overlay wearing and protection option have a negligible effect on construction time and on traffic

disruption because the surface only has to be diamond-ground after the panels are installed. They have no effect on construction time and cause no traffic disruption because the concrete is ready for traffic when the panels are installed. The grinding can be done a lane at a time as traffic uses the other lanes. The thin epoxy overlay wearing and protection system has minimal effect on construction time and traffic disruption because the overlay can be installed with short lane closures during off-peak traffic periods, such as at night. The waterproof membrane overlaid with asphalt concrete has more effect on construction time and traffic disruption than the thin epoxy overlay but rapid installations during off-peak traffic periods can be done in many situations. The thin bonded hydraulic cement concrete overlay has the greatest impact on construction time and traffic disruption because of the time required for the concrete to cure. Rapid hydraulic cement concrete overlays in which traffic is placed on the concrete after only 3 hours of cure time have been accomplished.[40] The overlay is constructed with latex-modified concrete that is batched with a special rapid hardening hydraulic cement. Use of this option has minimal effect on construction time and traffic disruption because the overlay can be installed with short lane closures during off-peak traffic periods such as at night or on weekends.

APPENDIX A – NOTATION

SYMBOL	DESCRIPTION
A	area of cross section of precast panel
A_b	area of reinforcing bar or wire
A_{cv}	area of concrete engaged in shear transfer
A_{ps}	area of prestressing steel
As	area of non-pretensioning tension reinforcement
A_{vf}	area of shear reinforcement crossing the shear plane
a	depth of equivalent rectangular stress block
b	width of section
C	compression force in concrete
c	distance from extreme compression fiber to neutral axis
c	cohesion factor
DC	dead load of structural components and nonstructural attachments
DW	dead load of wearing surfaces and utilities
d_b	nominal diameter of strand, reinforcing bar or wire
d_e	effective depth from extreme compression fiber to the centroid of the tensile force in the tensile reinforcement
d_p	distance from the extreme compression fiber to the centroid of the prestressing tendons
d_s	distance from the extreme compression fiber to the centroid of the non-prestressed tensile reinforcement
E_c	modulus of elasticity of the concrete
E_{ci}	modulus of elasticity of concrete at transfer
E_p	modulus of elasticity of prestressing strand
e_p	eccentricity of prestressing force

e_{pg}	eccentricity of prestressing force
e_{pc}	eccentricity of prestressing force
f_b	concrete stress at bottom fiber
f'_c	compressive strength of concrete at 28 days
f'_{ci}	compressive strength of concrete at time of initial prestress
f_{cgp}	sum of concrete stresses at center of gravity of prestressing strands due to prestressing force at transfer and the self-weight of the member at sections of maximum moment
f_{cpe}	compressive stress in concrete due to effective prestress forces only (after allowance for all prestress losses) at extreme fiber of section where tensile stress is caused by externally applied loads
f_{pi}	initial stress immediately before transfer
f_{ps}	average stress in prestressing steel at the time for which the nominal resistance of member is required
f_{pt}	stress in prestressing strands immediately after transfer
f_{pu}	ultimate strength of prestressing steel
f_{py}	yield point stress of prestressing steel
f_r	allowable tensile stress in pretensioned members
f_s	tensile stress in the reinforcement at service loads
f_t	concrete stress at top fiber
f_y	yield strength of reinforcement
H	average annual ambient mean relative humidity (%)
H	height of the barrier
h	panel thickness
I	moment of inertia about the centroid of the precast panel
IM	dynamic load allowance
K	factor used in power formula for f_{ps}

K_{df}	transformed section coefficient that accounts for time-dependent interaction between concrete and bonded steel in the section being considered for the time period between deck installation and final time
K_{id}	transformed section coefficient that accounts for time-dependent interaction between concrete and bonded steel in the section being considered for the time period between transfer and deck placement
K_L	factor accounting for type of steel (30 ksi for low relaxation strand)
k_f	factor for the effect of concrete strength
k_{hc}	humidity factor for creep
k_{hs}	humidity factor for shrinkage
k_s	factor for effect of the volume-to-surface ratio of the component
k_{td}	time development factor
κ	multiplier for development length
LL	live load
L_c	dimension at barrier used to establish critical length of yield line failure pattern
ℓ_d	development length
$M_{barrier}$	moment in panel due to a barrier
M_{base}	moment at base of a barrier
M_{cr}	cracking moment
M_{dnc}	total un-factored dead load moment
M_{DC}	un-factored bending moment due to dead load of structural components and nonstructural attachments
M_{DW}	un-factored bending moment due to dead load of wearing surfaces and utilities
M_{LL+IM}	un-factored bending moment due to live load + impact
M_n	nominal flexure resistance
$M_{service}$	total bending moment for service load combination
M_{slab}	moment in panel due to self weight
M_{ws}	moment in panel due to wearing surface

m	multiple presence factor
n	number of prestressing strands
P_c	permanent net compressive force normal to shear plane
P_i	total prestressing force immediately after transfer
P_{pe}	total prestressing force after all losses
p_c	permanent net compressive force normal to shear plane
Q	calibration factor used in the power formula for f_{ps}
R_W	total transverse resistance of the railing
S_b	section modulus for the extreme bottom fiber
S_c	section modulus for the extreme fiber of the composite section where tensile stress is caused by externally applied loads
S_{nc}	section modulus for the extreme fiber of the monolithic or non-composite section where tensile stress is caused by externally applied loads
S_t	section modulus for the extreme top fiber
T	tension force in prestressing strands
T_{base}	collision force at the base of the barrier
t	maturity of concrete, defined as age of concrete between time of loading for creep calculations, or end of curing for shrinkage calculations, and time being considered for analysis of creep or shrinkage effects
t_f	final age
t_i	age at transfer
V_n	nominal shear resistance of the section considered
w	panel width
X	distance from the wheel load to the section under consideration for barriers
β_1	ratio of the depth of the equivalent uniformly stressed compression zone assumed in the strength limit state to the depth of the actual compression zone

Δf_{cd}	change of stresses at centroid of prestressing strands due to long term losses between transfer and deck installation combined with deck weight and superimposed loads
Δf_{pCD}	prestress loss due to creep of concrete, time of installation to final age
Δf_{pCR}	total loss in prestressing steel stress due to creep time of transfer to time of installation
Δf_{pES}	total loss in prestressing steel stress due to elastic shortening
Δf_{pLT}	losses due to long-term shrinkage and creep of concrete, and relaxation of steel
Δf_{pR1}	prestress loss due to relaxation of steel time of transfer to time of installation
Δf_{pR2}	prestress loss due to relaxation of steel, time of installation to final age
Δf_{pSD}	prestress loss due to shrinkage of concrete time of installation to final age
Δf_{pSR}	prestress loss due to shrinkage of concrete, time of transfer to time of installation
Δf_{pT}	total loss in prestressing steel stress
ε_{bid}	concrete shrinkage strain from time of transfer to installation
ε_{bdf}	concrete shrinkage strain of panel between deck installation and final age
ε_{bif}	concrete shrinkage strain of panel between initial and final age
ε_p	total strain in strands
ε_s	strain in reinforcing bar
ϕ	strength reduction factor
$\psi_b (t_f , t_i)$	creep coefficient at final time due to loading introduced at transfer
μ	friction factor

APPENDIX B – PREFABRICATION SCAN REPORT

B.1 INTRODUCTION

In April 2004, eleven US engineers from the Federal Highway Administration (FHWA), State Department of Transportations (DOTs), local agency, private industry, and academia participated in a Prefabricated Bridge Elements and Systems Scan Tour of Japan and four European countries. The scan was jointly sponsored by FHWA and American Association of State Highway and Transportation Officials (AASHTO). The purpose of the tour was to investigate and document the applications and experiences with prefabricated bridge systems in Japan and Europe. The panel conducted meetings with government agencies, academia, and private sector organizations. The tour resulted in a number of significant strategic findings, as well as the report *Prefabricated Bridge Elements and Systems in Japan and Europe*.[41]

The scanning team's primary objective was to identify the most significant technologies for possible implementation in the United States. Other objectives of the scanning tour were to identify decision processes, design methodologies, construction techniques, costs, and maintenance and inspection issues associated with use of the technologies.

The scanning team was interested in all aspects of design, construction, and maintenance of bridge systems composed of multiple elements that are fabricated and assembled off-site. The elements consisted of foundations, piers or columns, abutments, pier caps, beams or girders, and decks. Bridges with span lengths in the range of 20 to 140 ft were the major focus; although, longer spans were of interest if a large amount of innovative prefabrication was used.

The team visited Japan, the Netherlands, Belgium, Germany, and France. The following activities were undertaken:

- evaluate the performance of prefabricated bridges
- interview owners, designers, fabricators, and contractors on project experiences and document lessons learned
- evaluate documentation and reports
- report on bridge elements/systems and connection details

The focus areas of the scan were prefabricated bridge elements and systems that:

- minimize traffic disruption (congestion)
- improve work zone safety
- minimize environmental impact
- improve constructability
- increase quality
- lower life-cycle costs

The scanning team identified 33 bridge technologies that, in one or more aspects, were different from current practices in the United States. The team identified ten overall technologies that are recommended for further consideration and possible implementation into United States practices.

The ten technologies identified were categorized into four sections which are bridge movement systems, superstructure systems, deck systems, and substructure systems.

Three of the technologies identified under deck systems have a direct application to the use of full-depth concrete deck panels. They are full-depth prefabricated concrete decks, deck joint closure details, and multiple-level corrosion protection system. The full-depth prefabricated concrete decks and deck joint closure details were used in Japan and France. The multiple-level corrosion protection system was used in Japan, France, and Germany for the primary corrosion protection system for cast-in-place (CIP) concrete decks and precast concrete decks.

B.2 Full-Depth Prefabricated Concrete Decks

The use of full-depth prefabricated concrete decks in Japan and France reduces construction time by eliminating the need to erect deck formwork and provide CIP concrete. Other reasons for using prefabricated concrete decks in Japan are a reduction in skilled labor and rising labor costs which have fostered growth of factory-produced prefabricated components for bridge construction. The Japanese engineers also search for ways to lower the size and weight of prefabricated components to satisfy hauling restrictions.

The use of full-depth prefabricated concrete decks on steel and concrete beams provides a means to accelerate bridge construction using a factory-produced product, eliminates placing and removing formwork above traffic, and reduces lane closures. The deck panels are connected to steel beams through the use of studs located in pockets in the concrete deck slab similar to details used in the United States. Although similar systems have been used in the United States, the Japanese system has proved to require low maintenance and is durable. One reason for the success may be the use of a multiple level corrosion protection systems. The transverse joint between panels is made with CIP concrete placed over overlapping loops of reinforcement with additional reinforcement threaded through the loops. The Japanese no longer use longitudinal post-tensioning because of previous experience with corrosion problems. They now prefer to use the joint detail.

In recent years, the Japanese have started using precast, transversely prestressed, full-depth concrete decks because of their improved durability, lower creep deformation, and faster construction as shown schematically in **Figure B.2-1**. In addition, wider girder spacing with fewer girders can be used compared to a CIP deck. The full-depth precast concrete panels are connected to steel girders using studs located in pockets in the panels as shown in **Figure B.2-2**. The studs provide a positive connection for lateral load, although the superstructure is designed for non-composite action even after grouting the connections. The transverse joint between panels consists of overlapping hoop bars (typically in the shape of a U) that project from each edge of the panel. Individual bars are threaded within the hoop bars to complete the connections, which are then encased in concrete. A schematic drawing of the deck joint reinforcement is shown in **Figure 3.4-8**. The decks are not post-tensioned longitudinally. All bridge decks in Japan receive a waterproof membrane and asphalt riding surface.

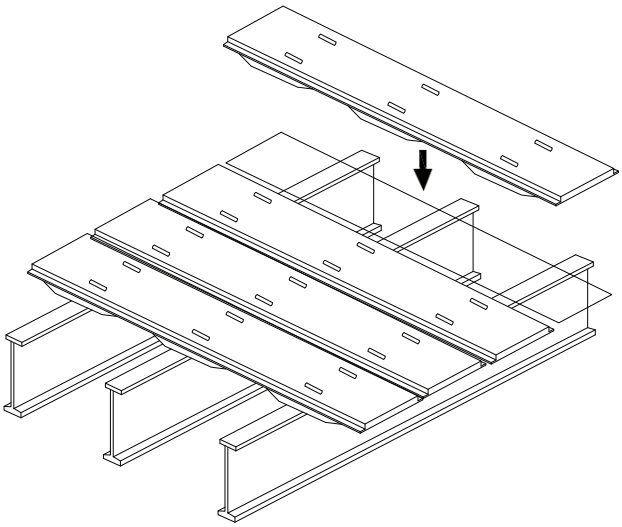

Figure B.2-1. Full-depth precast bridge deck concept.

Figure B.2-2. Installing shear studs.

a. Deck panels in place

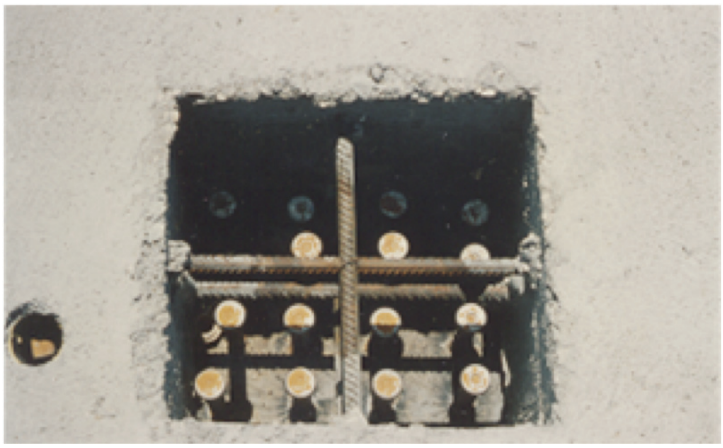

b. Shear stud connection

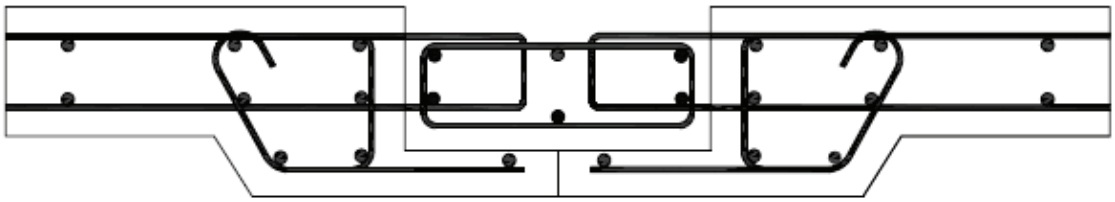

c. Transverse joint details

b. Finished bridge.

Figure B.2-3. Full-depth full-width precast deck panels.

In Japan, one of the three deck systems used for the ramps of the Nagoya-Minami Interchange on Route 23 is a full-depth prefabricated concrete deck. Keeping the interruption to traffic on Route 23 to a minimum was of utmost importance, and as such, the ramps had to be constructed very quickly. At the Route 23 Interchange, the deck panels were erected on top of steel box girders. However, they can also be used with precast, prestressed concrete girders. The panels are full-width, pretensioned, and 10.5 in. thick. Two grout pockets per girder line for each panel are provided for connection to steel girders with three to six studs in each pocket. The transverse joint between panels is made with CIP concrete placed over overlapping loops of rebar with additional rebar threaded through the loops. The deck panels are not longitudinally post-tensioned.

One form of construction used in France consists of two longitudinal steel beams supporting full-width, full-depth precast concrete deck panels. The concrete panels, which are usually 39 ft long and 8.2 ft wide, are match-cast, epoxied together, and longitudinally post-tensioned. Screws located in the panels are used to adjust elevations. As an alternate to match-casting, a transverse CIP joint is used between panels. Reinforcement extending from the edges of adjacent panels overlaps within the joint to provide continuity. Studs are welded to the steel beams through pockets in the panels. The panels sit on continuous elastomeric pads that also provide a seal for the grouting between the panels and the steel girder. The grout is injected through the stud pockets before the pockets are filled with concrete. The system is shown in **Figure B.2-3 (a-d)** and **Figure 3.5.1-1**. Another variation of full-depth precast deck panels is illustrated in **Figure B.2-4**. The center portion of the bridge consists of CIP concrete on the top flange of a 19.2-ft-wide steel box girder. Precast panels on both sides of the box girder extend the deck width to 75 ft. The panels are prestressed in the transverse direction to prevent cracking. Cast-in-place joints above the transverse steel beams are used to provide longitudinal continuity and to connect the concrete panels to the steel beams.

Figure B.2-4. Full-depth precast deck panels. (Photo courtesy LCPC).

B.3 Deck Joint Closure Details

Prefabricated deck systems require that longitudinal and transverse joints be provided to make the deck continuous for live load distribution and lateral load resistance. This is accomplished by using special loop bar reinforcement details in the joints. The closure joint detail is a very robust joint that should lend itself to high quality and long-term durability without post-tensioning. It should facilitate the use of prefabricated full-depth deck systems, longitudinal joints between adjacent boxes, and improved transverse adjusting joints, while remaining applicable to both seismic and non-seismic areas. Various joint details observed during the tour could be developed for use in the United States to facilitate the use of prefabricated full-depth deck systems. The CIP deck joint has the advantage that it provides better continuity between adjacent precast elements compared to details currently used in the United States. It is expected that the joint details will provide better control of cracking along the joint and result in a more durable and longer-lasting structure.

In Japan, the scanning team observed the construction of the Anjo Viaduct, New Tomei Expressway (see **Figure B.3-1**) that used the transverse adjusting joints in the top slab between the segments at the piers and longitudinal connection slab between adjacent box girder segments. The team also received presentations on the Anjo Viaduct project and the Kamikazue Viaduct. Smaller box segments were used to reduce section weight. A double-loop joint was adopted for the transverse adjusting joints to allow for workability at uniting the segments and errors in manufacturing the segments. Fiber-reinforced expansive admixture concrete was adopted at the transverse adjusting joints and the longitudinal connection slab between each girder. Stainless steel fibers were selected for concrete at the adjusting joints and vinylon fibers were selected at the connecting slab.

The double-loop joint was applied to the CIP connection of the precast box segments where the slabs had been prestressed in the transverse direction. The rebar was arranged such that a closed loop bar (side-loop rebar) projected from the precast segments (see **Figures 3.4-7** and **B.3-2**). The center-loop rebar was annular shaped with a lap that is welded using an enclosed welding method for the ease of construction. The Japanese had performed experimental testing of full-size slab connections to prove their acceptability.

Figure B.3-1. Anjo Viaduct construction.

Figure B.3-2. Underside of Longitudinal Joint on the Anjo Viaduct.

B.4 Multiple-Level Corrosion Protection Systems

In Japan, Germany, and France, concrete bridge decks are covered with a multiple-level corrosion protection system to prevent the ingress of water and deicing chemicals. The Germans and Japanese had used a waterproof membrane with a thin asphalt overlay in the past but felt that the system did not provide the necessary protection. Additionally, the waterproof membrane was subject to damage when the deteriorated asphalt surface was milled off and replaced with a new asphalt overlay. The former asphalt overlay system needed to be replaced approximately every 10 years. Because of the poor performance of the old system, Germany developed a multiple-level corrosion protection system that they have been using since the mid 1980s and feel will provide them a 100-year service life. The same system was adopted in Japan. The systems generally involve providing adequate concrete cover to the reinforcement, a concrete sealer, waterproof membrane, and two layers of asphalt. This type of corrosion protection system may be beneficial with prefabricated systems as a means of protecting the joint regions from potential corrosion damage, thereby ensuring a longer service life. The system may also be used to extend the service life of existing bridges.

Maintenance of the system requires that the riding surface of the asphalt be replaced periodically. Typically, 1.2 in. is milled off when the asphalt wearing surface is replaced. The use of these

systems increase the design dead loads for bridges that are currently not designed for these loads. The other disadvantage of these systems is that they prevent visual inspection of the deck surface. Nevertheless, the scanning team concluded that the systems should be compared with existing systems being used in the United States since these systems are used throughout Japan and Germany.

The scanning team was shown a model of a CIP deck. This model utilized an epoxy coating over the CIP concrete deck, bituminous sheet material adhered to concrete deck 0.08 in. thick alternative stainless steel sheet applied over the bituminous sheet, and 2 layers (3.15 in.) of dense graded asphalt. The Japanese have been using a 1.6 in. open graded asphalt mix over a 1.4 in. dense asphalt mix over a 0.08 to 0.12 in membrane.

A typical bridge deck multiple-level corrosion protection system (see **Figure B.4-1**) consists of the following layers of material from top to bottom:

1. 1.4 to 1.6 in. thickness of asphalt wearing surface
2. 1.4 to 1.6 in. thickness of asphalt protective layer
3. 0.18 to 0.31 in. thickness of bituminous fabric sheet material adhered to the concrete deck by heat and pressure
4. epoxy-coating primer
5. 1.6 in. concrete cover to the steel reinforcement

The use of waterproofing systems in other European countries is discussed in NCHRP Report 381—*Report on the 1995 Scanning Review of European Bridge Structures.*[42]

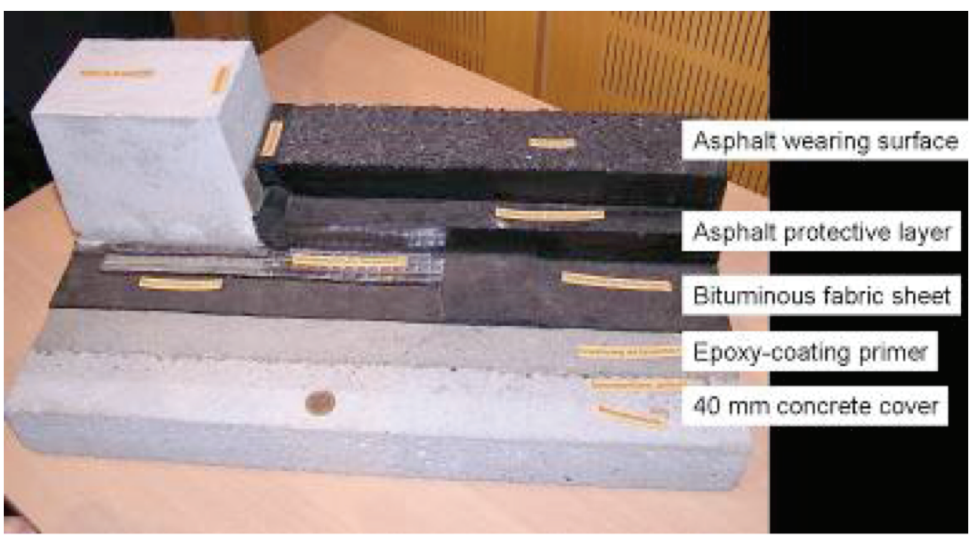

Figure B.4-1. Bridge deck multiple-level corrosion protection system.

Gussasphalt is one material used on bridge decks. It consists of a dense mix of filler, sand, grit or gravel, and bitumen. Various categories of hardness are available depending on the anticipated stresses and indentation depths. Requirements for Gussasphalt when used as a protective or intermediate layer on bridges are given in 2TV-BEL-B[43] (Additional Technical Contract Conditions and Guidelines for Production of Concrete Bridge Decks) and 2TV-BEL-ST.[44]

APPENDIX C – SUCCESSFUL PROJECTS

C.1 WOODROW WILSON BRIDGE; WASHINGTON, D.C.

The Woodrow Wilson Bridge carries Interstate 95/495 over the Potomac River at the south end of Washington, D.C. Owned by the Federal Highway Administration, the structure is jointly operated and maintained by Maryland, Virginia, and the District of Columbia. The bridge, which was carrying more than 160,000 vehicles per day in 1996[7] was built in 1962 and re-decked in 1983. It is 5900 ft long with steel girder approach spans of 62 to 184 ft on each side of the double-leaf bascule span at the navigation channel. The bridge carries three lanes of traffic in each direction. The bridge superstructure consists of four main girders with floor beams and rolled beam stringers that are continuous over the floor beams. System details are shown in **Figure C.1-1**.

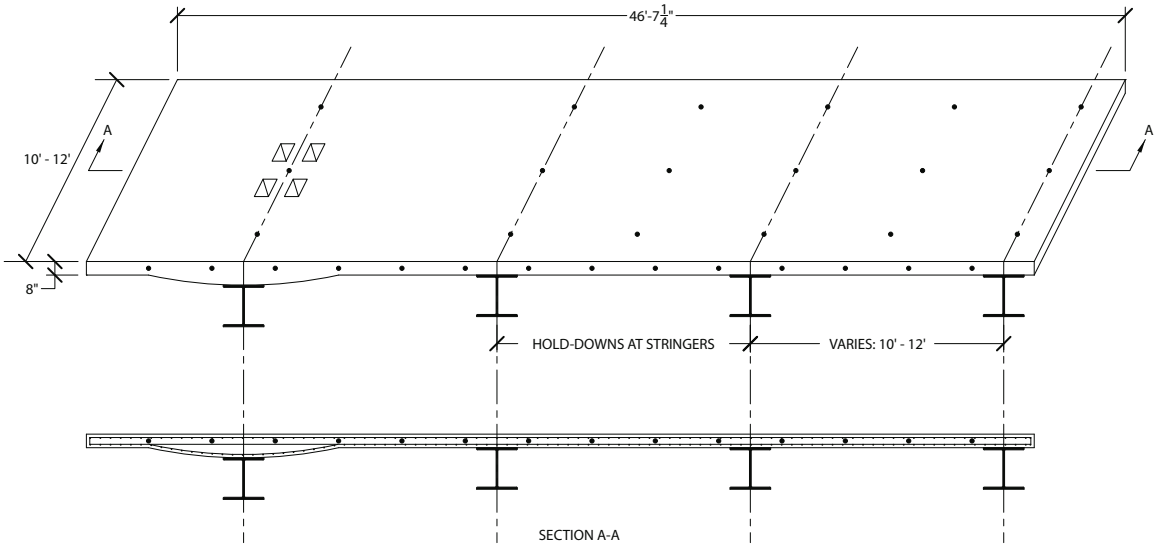

Figure C.1-1. Typical panel for Woodrow Wilson Bridge.

Planning for deck replacement that began only 15 years after the bridge had been completed because the original CIP concrete deck was in an advanced state of deterioration. Since the steel superstructure was still in good condition, it was decided to replace the deck using precast elements to speed construction and reduce inconvenience for the traveling public.[7] As part of the reconstruction, the roadway for each direction was widened from 38 ft to 44 ft.[45]

Lightweight concrete was used for the precast deck panels to allow a thicker slab section (for greater stiffness and improved durability) and a wider roadway section. Because of the lightweight concrete, these improvements could be made without strengthening the existing superstructure. Lightweight concrete, which was also used for precast barrier parapets, also had an excellent record of durability on bridge projects in the mid-Atlantic region. The lightweight concrete, which used an expanded slate coarse aggregate, had a minimum specified compressive strength of 5.0 ksi at 28 days with a design air-dry unit weight of 115 lb/ft^3. Over the entire ten month fabrication period, the average actual 28-day compressive strength of the concrete in the panels was 6.570 ksi with an average air-dry density of 115.7 lb/ft^3. [(8)]

The replacement deck system was composed of 46 ft 7.5 in. wide transversely post-tensioned lightweight concrete full-depth precast deck panels. Each precast deck panel was supported on the exterior main girder and five stringers. The length of a typical panel varied from 10 to 12 ft with a typical thickness of 8 in. tapering to a maximum thickness of 13 in. over the exterior girder. A total of 1026 precast panels were used to redeck the bridge, each weighing approximately 22 tons. The panels were fabricated in a prestress plant located about 75 miles from the bridge site. The completed deck was post-tensioned in the transverse and longitudinal directions with strand tendons. The deck panels were supported on polymer concrete between the panel and stringers and held in place with bolted hold-down devices. The precast deck panels had a two-coat epoxy-sand membrane applied in the precast plant. A 1½ in. asphalt wearing surface was placed on the deck after installation.

A primary goal of the project was to minimize disruption to peak traffic during deck replacement. The project criteria required all lanes to be available for morning and afternoon peak hour traffic. Therefore, construction was limited to night work only with traffic shifted to one lane in each direction in the adjoining roadway. The contractor began work on the project on December 2, 1982 and completed work on September 19, 1983. This was a remarkable achievement considering the traffic maintenance requirements and one-half of the work was done during the winter months. The contractor achieved an average replacement of 1554 ft^2 of deck per calendar day and 2745 ft^2 of deck per actual workday.

The replacement deck has performed very well under extreme traffic volume, which has a very high percentage of trucks. After more than 13 years of service, it was noted that "the performance of the lightweight concrete panels has been excellent with no indications of the breakdown of the concrete experienced by the original normal weight deck."[7] A replacement for the existing Woodrow Wilson Bridge is now under construction. When the existing bridge is retired, the full-depth precast replacement deck will have served successfully for over 20 years under extreme traffic conditions

C.2 Skyline Bridge – NUDECK System; Omaha, NE

The NUDECK system represents a unique design developed at the University of Nebraska for the Nebraska Department of Roads, for use as a standard full-depth, full-width precast deck panel system. It features transversely pretensioned panels with wet-cast transverse joints and fully open channels in the longitudinal direction, where concrete is totally blocked out and the pretensioning strands and additional transverse bars are allowed to be continuous across the channels. The longitudinal prestressing is unique. Strands are threaded in the open channels over the girder lines. They are anchored in special end panels. After the transverse joints achieve adequate strength, the longitudinal strands are pulled individually to the required tension. This unique prestressing system allows the contractor crews to perform the post-tensioning without subcontracting to a specialty subcontractor. The open channel allows the owner's representative to visibly inspect the process. Also, the need for costly and time-consuming (and misalignment-prone) duct placement in the panels and duct splicing in the transverse joints is eliminated. The strands are fully surrounded with concrete that is placed after all channels are filled, with no concern about partially-filled ducts.

The Skyline Bridge presents the first implementation of the full-depth precast concrete NUDECK panel system (see **Fig. C.2-1**).[18] It is located at 198th and West Dodge Road in

Omaha, Neb. The bridge carries Skyline Drive traffic over West Dodge Road (US 6 Expressway). Current average daily traffic is 1445 vehicles, estimated to increase to 3110 vehicles by the year 2022. Construction of this bridge was completed in December of 2003. The bridge consists of two spans, 89 ft and 125 ft, a 25° skew, and 55 in. deep steel girders spaced at 10 ft-10 in. (see **Fig. C.2-2**). The precast bridge deck consists of 26 typical panels, with a length of 7.0 ft and a width identical to the bridge width, and two end panels, which house the post-tensioning anchorage block. The panel is 6 in. thick with 2 in. Type K cement overlay. The concrete strength of the panel is 4.3 ksi at release and 6.0 ksi at service. The precast bridge deck panels are pretensioned transversely and post-tensioned longitudinally. Sixteen-0.6 in. strands are tensioned along each continuous 12 in. channel over the girder line.

Several new features were introduced on this project. The steel girders had 1¼ in. studs arranged in a single row over the steel girder web at a spacing of 6 in., rather than several rows of the smaller ¾ or ⅞ in. studs. The bridge skew and the requirement for a sidewalk on one side made the deck panel geometry relatively challenging, especially since a crown was required at the roadway centerline and a 2% cross slope was enforced.

Figure C.2-1. Installed panels before post-tensioning in the open channels.

Figure C.2-2. Skyline Bridge before deck erection.

C.2.1 Deck Panel Design

Service limit state analysis was performed to account for the post-tensioning. Some basic assumptions and notations are listed as follows:

- Concrete strength at 28 days is 6.0 ksi for both the 6 in. precast deck panels and the 1.5 in. CIP topping.
- Beam bearing width is assumed as 12 in.
- The composite section of prefabricated steel plate beam and 6 in. precast deck panel is presented as composite section I; composite section II refers to the full section including the steel beam, 6 in. deck panel, plus 1.5 in. CIP topping.
- 2 in. topping load is considered to act on the composite section I.
- At the positive moment area, the moment due to super-imposed dead load (M_{SID}), the moment due to live load (M_{LL}), and prestressing force change due to prestress losses applies to the composite section II. At the negative moment zone, M_{SID}, M_{LL}, and prestressing force change is assumed to act on the composite section I to account for the possibility that the 2 in. topping cracks.

The top fiber of the 1.5 in. topping at the bearing face section was calculated to crack. Conservatively, the properties of composite section I may be used for stress calculation, which results in a total tensile stress of 0.25 ksi at the top fiber of the 6 in. precast panel which is less than f_{cr} value. Thus, with the calculated stress well below the cracking strength of the concrete, the probability of cracking is minimized and concern for corrosion is reduced. Note that most of the sections along the bridge spans are in compression at service limit state, which indicates the proposed system has the required high structural performance.

C.2.2 Deck Panel Production

The precast panels were produced at Concrete Industries Inc., in Lincoln, Neb.[18] **Figure C.2.2-1** shows a typical precast deck panel reinforcement setup, which includes four pairs of ½ in. diameter pretensioning strands along the panel length (bridge transverse) direction. The conventional reinforcement consists of (8) No.7 continuous bottom bars, (8) No.7 short top bars

across the open channel, and No.5 rebar at 12 in. spacing as the secondary reinforcement. Also provided are spirals at the ends of pretensioning strands for confinement and to reduce the required strand development length.

Figure C.2.2-2 presents the details to create the panel crown. It normally takes one day to set up the deck panel reinforcement and the concrete is cast the next day. After the deck panel is cast and the concrete cures, it can be lifted out of the prestressing bed and the crown is then formed (see **Fig. C.2.2-3**). The panels were erected onto the steel supports which gave it a 2% crown. Afterwards, the top steel plate was removed and the foam blocks were removed. Once the top strands were cut, the panel deflected following the supports' elevation and a 2% crown was formed accordingly. **Figure C.2.2-4** illustrates the crown panels stacked in the precast yard.

Figure C.2.2-1. Reinforcement setup of Skyline Bridge panel.

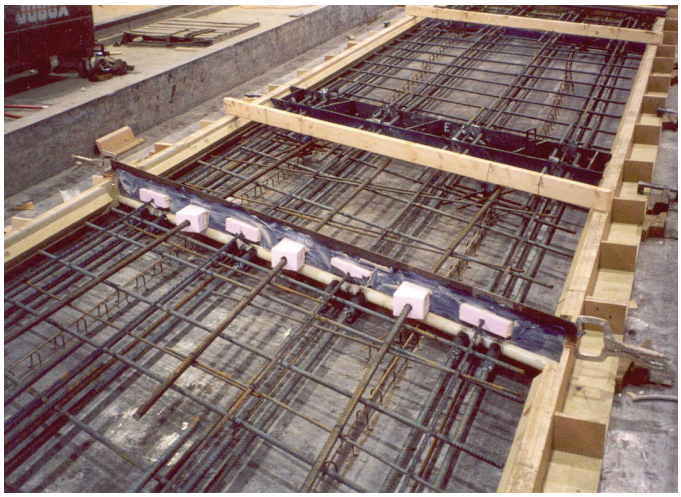

Figure C.2.2-2. Details of crown formed in panel.

Figure C.2.2-3. Forming crown.

Figure C.2.2-4. Crowned panels stacked in the precast yard.

C.2.3 Panel Handling and Shipping

To avoid any buckling of the No.7 bars across the open channels, the lifting points were carefully determined. **Figure C.2.3-1** shows a possible lifting scheme considering the deck panel is subject to its self-weight of 1.02 kip/ft. Special steel frames were made to ship the precast panels (see **Fig. C.2.3-2**). Note that it is desirable if the gap between adjacent steel frames can be minimized so that the corresponding positive moment in the panel can be reduced.

Figure C.2.3-1. Skyline Bridge panel handling.

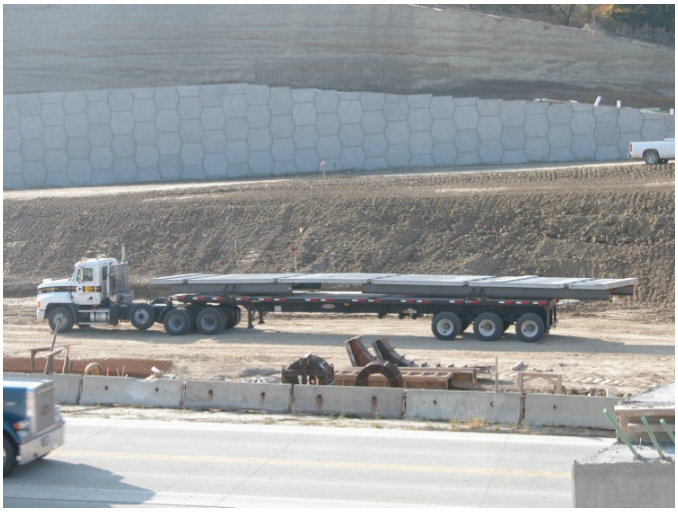

Figure C.2.3-2. Skyline Bridge panel shipping.

C.2.4 Support System

There are several methods to support the panels on the girders and provide the flexibility of elevation adjustment to achieve the required roadway profile. The system used on Skyline Bridge has continuous steel angels attached to the edges of the top flange of the steel beam. Each pair of angles is held together with steel straps across the flange (see **Fig. C.2.4-1**). The angles are welded to the straps in the field to achieve the required elevation of the horizontal leg which provides bearing for the deck panels. The horizontal leg elevation is determined through measurement of the actual top-of-beam elevation. Thus, the deck elevation is known with a high degree of precision and no further adjustments are necessary. This system is similar to the one typically used for stay-in-place metal deck forms. The angles must be strong enough to carry the precast panel weight, and installation vehicles if applicable, before the open channels are grouted.

Figure C.2.4-1. Support system on Skyline Bridge.

C.2.5 Deck Panel Installation

The precast panels were shipped from Lincoln to Omaha, which took a total of three days by three trucks. The panels were erected by crane instead of the front loaders as initially specified by the contractor. Erecting each panel to its required location took approximately fifteen minutes. For the initially-erected panels near the abutment, the No.7 bars across the open channel conflicted with the 1¼ in. studs, which resulted in cutting those studs. Twenty-four 1¼ in. studs were removed and each large-diameter stud was replaced with 2⅞ in. studs. **Figure C.2.5-1** shows a view of the bridge after several panels were erected. A typical panel at the channel location is illustrated in **Figure C.2.5-2**, where the 1¼ in. studs, steel straps across the beam top flange, No.7 bars, and ½ in. diameter pretensioning strands can be seen.

Once the backer rod and duct tape are put at their specified locations, flowable concrete may be placed in the transverse shear key. After the concrete had achieved the required strength, the post-tensioning strands were pulled through the channels. Instead of using a special device such as the "Chinese Finger" to pull several strands simultaneously as proposed by the University of Nebraska-Lincoln researchers, the contractor pulled each strand individually using a truck. Even though it was a little time-consuming, this procedure was completed without any problems (see **Fig. 3.5.2-5**). The strands were anchored by one-time-use chucks seated against the curved steel plate as shown in **Figure 3.5.2-6**. After making sure that no strands are intersected or inter-wound, post-tensioning can be applied following the given procedures (see **Fig. C.2.5-3**). Each strand was tensioned to a final force of 38.9 kip which was checked by both gauge reading and strand elongation. As a result, the measured strand elongation matched very well with the expected value. Once the strands are post-tensioned, the precast panels become an integral unit supported by the steel angles. The post-tensioning channels were grouted to lock the bridge deck panels with the steel beams through composite action (see **Fig. C.2.5-4**). Type K non-shrink cement (shipped from Texas) was cast as the overlay. The Type K cement cost about $1.70 per ft^2 for this bridge, which is more expensive than silica fume concrete. However, according to the contractor, it is easier to work with than silica fume concrete.

The approach slab was cast prior to the placement of the concrete overlay and a joint was set between the approach slab and bridge floor end. Galvanized inserts were embedded in the curb, the top of which matched the top of overlay. These inserts were set to connect the pedestrian

fencing. **Figure C.2.5-5** shows the barrier reinforcement setup and **Figure C.2.5-6** illustrates the completed barrier. The bridge construction was finished in December 2003 (see **Figs. C.2.5-7** and **C.2.5-8**).

Figure C.2.5-1. Plan view of Skyline Bridge after several panels were placed.

Figure C.2.5-2. Plan view of a typical panel channel.

Figure C.2.5-3. Post-tensioning the panels.

Figure C.2.5-4. Placing concrete in post-tensioning channel.

Figure C.2.5-5. Barrier reinforcement.

Figure C.2.5-6. Completed barrier.

Figure C.2.5-7. Plan view of completed Skyline Bridge.

Figure C.2.5-8. Elevation view of completed Skyline Bridge.

C.3 US-24 Mississippi River Bridge; Quincy, Ill.

The Quincy Bridge was built in 1986 and opened to traffic in 1987. It is located on the Illinois-Missouri border. This structure is a two-lane, nearly 2200 ft long, cable-stayed bridge. Full-width, full-depth precast deck panels were supported on a system of steel stringers, floor-beams, and welded girders. The structure consists of 14 continuous approach spans and two simple transition spans. The main river structure consists of a three span cable-stayed bridge unit with a precast deck, covered with a waterproof bituminous wearing surface.

The width of the panels was 46 ft 6 in. The length of the panels varied from 9 to 11 ft. and three to five panels were post-tensioned to form a group. The groups were connected to each other by splicing the post-tensioning tendons and grouting the intervening space. The panels were elevated by using a leveling device. The deck was designed to act compositely with the stringers. Composite action was achieved by the use of welded studs placed in shear pockets in the panels. A polymer grout was used to fill the pockets.

The match-cast joints between adjacent precast panels are performing adequately—no cracking or leaking is apparent. This type of joint is satisfactory for the existing type of bridge system due to the fact that the precast deck is in compression.

C.4 Seneca Bridge; LaSalle County, Ill.

This structure was built in 1932 and consisted of 13 total spans. The total length is 1510 ft 3 in. Spans one through five and ten through thirteen are approach spans 60 ft long, and spans six through nine are interior truss spans 202 ft 1 in., 364 ft 4 in., 202 ft 1 in., and 201 ft 9 in. long.

In 1986, the existing concrete deck along the entire bridge was removed and replaced with a 6½ in. precast prestressed slab deck. All precast planks were match-cast, with epoxy adhesives at the transverse joints, and the replacement was performed in sections. Full two-way traffic was maintained throughout construction in accordance with outlined special provisions. Bridge closure was permitted in ten hour periods, Sunday through Thursday, from 7:00 p.m. to 5:00 a.m.

The decks were transversely prestressed with 1 in. diameter smooth prestressed bars, quenched and tempered to a minimum yield strength of 90.0 ksi and a maximum yield strength of 110.0 ksi, and 1 in. diameter deformed prestressed bars, Grade 150, initially stressed to 45.0 ksi.

The existing beams were spaced at 5 ft 6 in. The connection between the precast deck and supporting system varies in accordance with the spans. Two high-strength ¾ in. bolts were used for the approach spans, while four high-strength ¾ in. bolts were used for the truss spans.

C.5 George Washington Memorial Parkway over Dead Run and Turkey Run; Washington, D.C.

The George Washington Memorial Parkway experiences heavy commuter traffic from workers traveling from Virginia and Maryland into Washington D.C. The 1996 average daily traffic for the Parkway was 42,800 vehicles/day, with 53,500 vehicles/day projected for 2016. The poor deck condition made it necessary to replace the decks for the bridges over Dead Run and Turkey Run. Because of heavy commuter use, the bridges had to be kept open to traffic on weekdays during deck replacement. The Dead Run Bridge consists of two structures that each carry two

lanes of traffic; the bridge is 305 ft long with a 3-span configuration. The Turkey Run Bridge is also two structures that each carry two lanes of traffic and has a length of 402 ft in a 4-span configuration. Both bridges have an 8 in. concrete deck supported on steel beams with non-composite action.

To meet the demands for maintenance of traffic, it was decided to use full-depth precast deck panels to reduce the number of days that normal traffic was disrupted. The use of precast deck panels allowed for replacement on weekends. This would only disrupt traffic for ten weekends instead of the several months that would have been required if traditional CIP construction had been used.

The non-composite aspect of the original design, along with the use of precast concrete post-tensioned full-depth deck panels, facilitated quick deck replacement and allowed the structures to be kept open during weekday traffic. The construction sequence closed the bridge on Friday evening with two-way traffic diverted to the adjacent bridge (shown in **Fig. C.5-1**). The major work stages included saw-cutting the existing deck into transverse sections that included curb and rail, removing the saw-cut sections of the deck, setting new precast panels, tensioning the longitudinal tendons after all panels in a span were erected and grouting the gap between the panel and the steel beam. Existing deck removal and panel installation can be seen in **Figures C.5-2** and **C.5-3**, respectively. The bridge was opened to rush hour traffic by Monday morning. The construction rate replaced one span per bridge per weekend. A rigid overlay was added on top of the precast panels. The bridge in its completed form can be seen in **Figure C.5-4**.

It was reported in an article for Turner-Fairbank Highway Research Council that "the redecking of Dead Run and Turkey Run bridges along the George Washington Memorial Parkway is an informative case study of how meticulous planning, use of modern engineering techniques and well-coordinated execution ensure that a complex construction project can be carried out without major disruptions in traffic flow." The project team was led by the Eastern Federal Lands Highway Division of the Federal Highway Administration for the National Park Service.

The special efforts of the project team did not go unnoticed by the public. In a letter to the *Washington Post*'s "Dr. Gridlock" column, Robert Gerard of Bethesda, Md. went so far as to suggest that "before undertaking any major road repairs, all officials should spend a day with whoever was responsible for managing the repairs of the George Washington Parkway bridge. Those repairs were a model of how to repair roads with an absolute minimum of inconvenience to the public. Well done."

Figure C.5-1. Weekend traffic is routed to adjacent structure for staged construction.

Figure C.5-2. The existing deck was saw-cut and removed.

Figure C.5-3. Installation of new precast deck panel.

Figure C.5-4. View of completed bridge.

C.6 THE 24TH STREET COUNCIL BLUFFS, IOWA BRIDGE

The 24th Street Bridge is constructed over the combined Interstate 29 and 80 (I-29/I-80) in Council Bluffs, Iowa. The two-span steel bridge serves as the primary access route to various popular attractions in western Iowa. The superstructure is made of post-tensioned concrete deck panels supported on steel girders. Steel girders were chosen for the main load carrying system because of two main factors: the span length and vertical clearance. The span length was above the Iowa DOT limit for the use of standard prestressed concrete bulb tee girders, and the constraints on vertical profiles required a shallower-than-optimum girder depth.

The steel girders were designed to act compositely with the deck. This required that the deck be connected to the girders through the use of shear connectors. The deck slab is supported by 12 steel girders spaced at 9 ft on center with a maximum girder length between field splices of 121.75 ft. Each deck panel was 10 ft long x 52 ft 4 in. wide x 8 in. thick. Each panel was pretensioned in the transverse direction with 10 - ½ in. diameter, 270 ksi low- relaxation prestressing strands located at the bottom of the panels. There were a total of 28 flat ducts embedded in each panel to house longitudinal post- tensioning. In order to have composite action between the deck and the girders, pockets are formed in the panels to accommodate headed shear studs in regions of positive moment. The total number of panels used was 70 precast deck panels designed with the 2007 edition of the LRFD specifications. **Figure C.6-1** illustrates a typical precast slab panel, as well as the embedded PT Ducts.

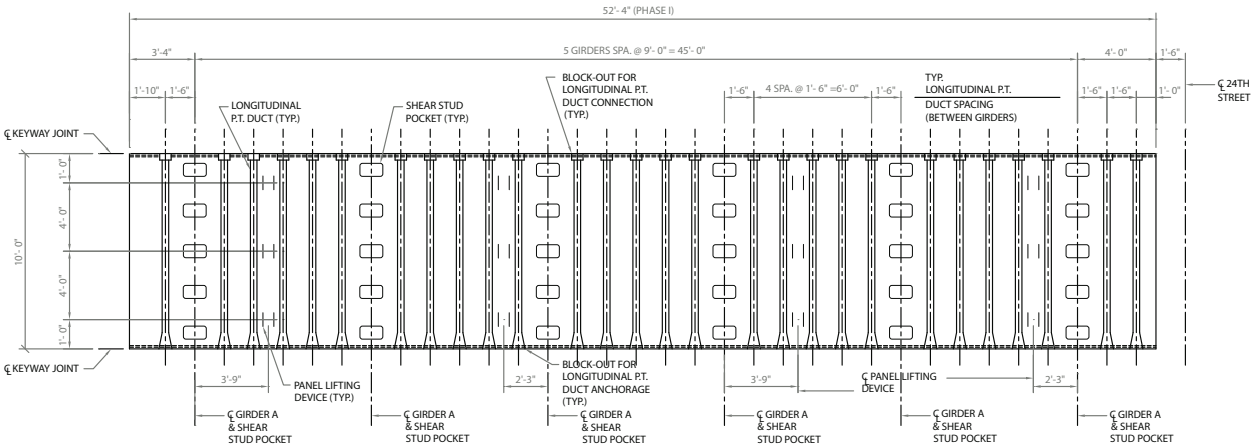

Figure C.6-1. Panel layout of the 24th Street Bridge.

C.6.1 Deck Panel Installation

The deck panels were installed following the erection of the frame system and the formation of the slab build-up below the panels. The contractor was responsible for the slab build-up and leveling of the deck panels. However, the plans included optional leveling bolts that helped in setting the panels to the correct elevations. After the erection phase, the transverse joints were filled with high-strength non-shrink grout. In this project, a female-to-female transverse connection was used in order to overcome match-casting problems as well as possible damage to the edges of panel during erection and post-tensioning. The transverse joint detail along with the block-out for splicing the post- tensioning ducts is shown in **Figure C.6.1-1**.

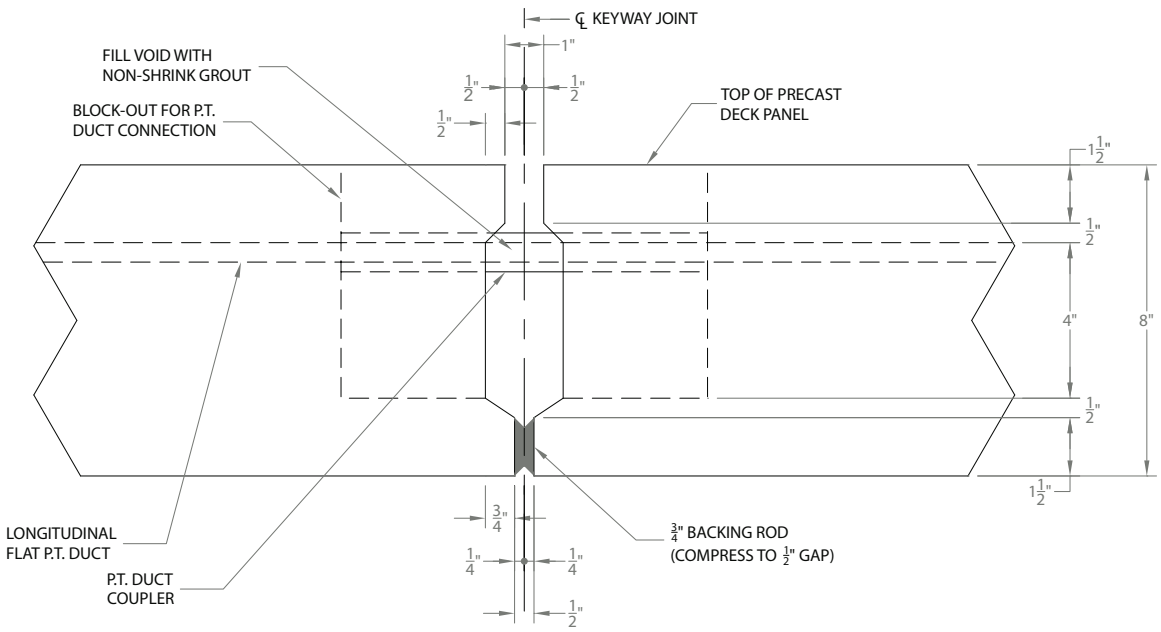

Figure C.6.1-1. Transverse Joint Detail of the 24th Street Bridge.

C6.2 Bridge Deck Design

Several factors influenced the amount of post-tensioning force that panels were designed to accommodate. LRFD specifications do not allow any tension in areas where auxiliary reinforcement is not provided. Tension in the panels was caused by the composite dead load, live load, and impact in the negative moment zone near the piers.

C.7 UTAH PRECAST DECK PANEL SYSTEM

The UTAH Department of Transportation (UDOT) has implemented a full-depth precast concrete deck panel system. The panels are used for bridge deck replacement, bridge widening, and new construction. Panels are designed for an HL-93 loading and 35 lb/ft^2 future wearing surface in addition to a thin bonded polymer overlay. The minimum panel thickness is typically 8¾ in. which allows for ¼ in. grinding, thus creating a nominal panel thickness of 8½ in.

The transverse width of the bridge can vary between 24–40 ft. The longitudinal length can vary between 8–16 ft. The overhang limits allow between 1–4 ft. Zero overhang is only allowed for closure pours with a minimum bearing of 6 in. For precast panels, there is an allowed beam spacing of up to 10 ft. For prestressed panels, beam spacing is allowed between 8–12 ft.

There are a minimum of four lifting devices per panel and a minimum of two level devices per beam in each panel. Place lifting points no closer than 1 ft 6 in. from the edge of the panels. For skewed panels, there is an allowance of up to 15 degrees. For square panels, there is an allowance of skew up to 45 degrees.

Two types of block-outs are acceptable. Use blind block-outs for all bridges to be surfaced with a thin polymer overlay. Use full thickness block-outs for all bridges that are to be surfaced with a waterproofing membrane and hot mix asphalt. Provide welded shear studs to connect the beams

to the concrete panel. For concrete girders, it is also acceptable to use U-shaped shear bars and T-headed reinforcement to connect the beam to the panel.

For the transverse joint shear connections, there are two solutions used:

- The designer may choose to grout the transverse joints with a non-shrink grout having a minimum compressive strength of 4.0 ksi at 24 hours.
- For concrete beams, Longitudinal Post-Tensioning (LPT) make the panels flexurarly continuous by using longitudinal post-tensioning at the transverse joint because they behave more monolithically and require less maintenance. A maximum spacing of the ducts should be 3 ft. The block-out should be approximately 6 in. x 6 in. in plan. Provide vertical adjustment devices for adjustment of grade to meet the elevations shown on the panel grade plans.

A prestressed panel should provide a more durable structure, since shrinkage cracking will be minimized or eliminated. Prestressed concrete panels will be of nominal thickness with prestressing strands placed transversely at a maximum spacing of 1 ft.

All materials, construction procedure, and workmanship shall be performed in accordance with UDOT and AASHTO LRFD specifications. **Figure C.7-1** shows a typical full-depth panel developed by UDOT.

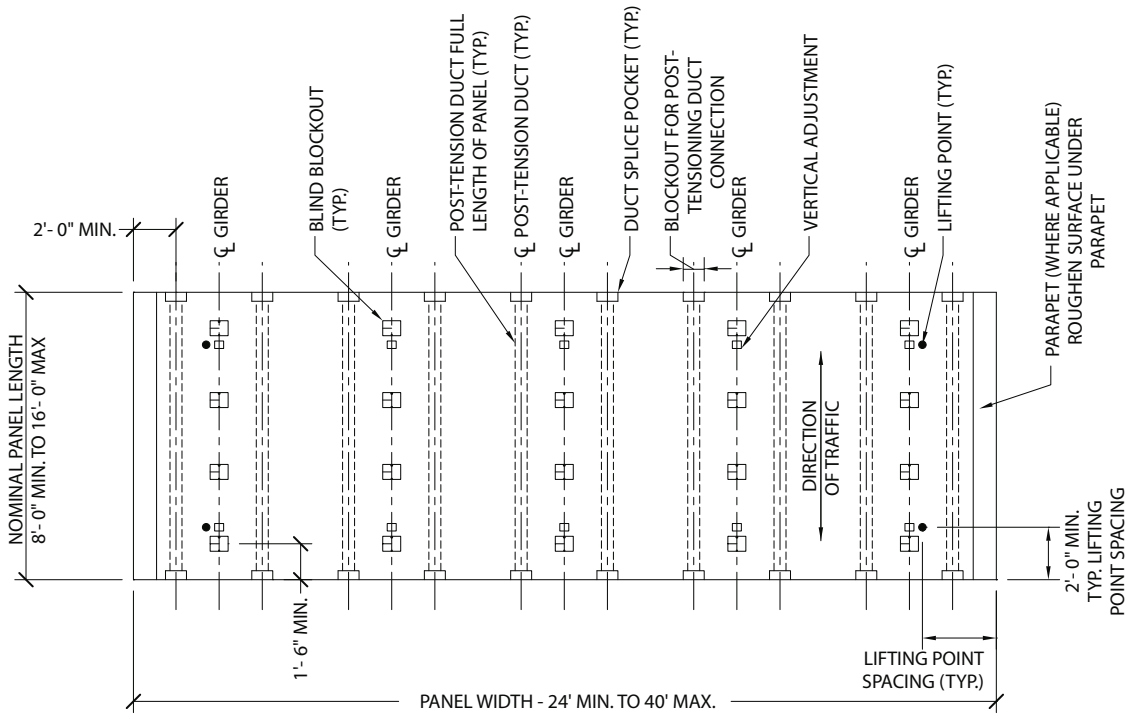

Figure C.7-1. Plan view- Utah Standard full depth deck panel

C.8 Cable-stayed Bridges

Full-depth precast deck panels have been specified for several long-span cable-stayed bridges over the last several years. The first to be constructed was the Baytown Bridge in Texas and the most recent is the Cooper River Bridge Replacement in Charleston, S.C. Several other bridges are being designed to include precast deck panels. The precast panel is selected for these bridges not only as a cost-effective deck system, but because they offer a benefit for creep design requirements. The precast panels can be specified by both final strength and age prior to installation. Since precast components can be made far in advance of installation, they can be produced and stored to achieve the specified strength and age prior to installation. Accordingly, the panels will provide the maximum restraint against creep at time of loading from the longitudinal force from the stay cable during superstructure erection. Cast-in-place decks have higher creep and possibly require additional strengthening of the superstructure components.

C.9 Required Post-tensioning Stress Across Longitudinal Joint

In 2004, the University of Wisconsin-Madison tested the amount of post-tensioning stress required across the joints to keep them tight under service-level vehicle loads. Previous research had shown that a minimum 0.200 ksi should be used for transverse joints in a simple span bridge.[14] No prestress levels were suggested for a longitudinal joint. A total of three full-scale longitudinal joint tests were conducted. Each test had a different amount of prestress across the joint.

In addition to determining the joint capacity, two of the longitudinal joint tests were loaded in a manner to create cyclic vertical movement in one of the slabs while the grout in the longitudinal joint was curing. This needed to be examined to measure the effects, if any, that the movement from traffic on one side of staged construction could have on the joint grout while it is curing.

Application of uniform moment on the joint was accomplished by applying a concentrated line load, distributed evenly across the width of the panel above one side of the joint. All specimens were 8 in. thick and 4 ft wide. The longitudinal joint test was set up as a three-span continuous beam, with the spans measuring 8 ft 10 in. The joint was located at mid-span of the interior span. The tests loaded the panels until first joint opening, which defined an acceptable serviceability load level. Vertical displacement, bottom of joint opening, and top of joint strain was recorded during testing.

The design service moment is calculated for the Door Creek Bridge in Wisconsin using the AASHTO Standard Specification. The moment is in units per foot width of panel and includes an impact factor of 1.3. The joint cracking moments are compared to the service load moment, plus impact, based on an HS-20 truck. From these comparisons a factor of safety (F.S.) is determined against cracking.

The listed deck service load moment for the transverse joint (longitudinal moment parallel to the girders) is based on the AASHTO LRFD design method. *LRFD Specifications* presents criteria for distribution reinforcement in the bottom of slabs when main reinforcement is perpendicular to the direction of traffic. According to *LRFD Specifications*, longitudinal distribution reinforcement shall be 67% of the positive main transverse reinforcement in the slab. The longitudinal design moment was thus taken as 67% of the calculated transverse design moment.

Based on the different prestress levels inspected through the joint tests, a prestress level of 0.360 ksi across the longitudinal joint results in a factor of safety of 1.5 against cracking at a service load level. Similarly a prestress level of 0.232 ksi provides a factor of safety of 1.53 against cracking in a transverse joint.

C.10 Projects Using Longitudinal Joints

The nighttime redecking of two bridges of Route 50 interchange at Route 7 in Fairfax County, Va.[28] utilized a CIP strip for their longitudinal joint. The joint was oriented over a girder to minimize shear force across the joint. Negative moment transfer at the joint is provided by spliced-top transverse bars embedded in a 3-ft strip of partial-depth, high-early-strength, CIP concrete. Because this bridge is relatively new there is no literature on the performance of the joint.

A second configuration was used recently on the Seal Island Bridge in Cape Breton, NS.[46] The bridge was constructed in stages, which left a longitudinal joint. This project utilized post-tensioning in both the longitudinal and transverse directions. The panels had mono-strand ducts placed in both longitudinal and transverse directions. After all the panels were in place they were post-tensioned to keep the joints tight. Again, because this bridge is new there is no literature on its performance.

The I-39/90 Bridge over Door Creek in McFarland, Wis.[14] utilized longitudinal post-tensioning of transverse joints, plus a combination of panel prestressing and transverse post-tensioning of the longitudinal joint that was required for the staged construction. A system was developed in which the stage 1 panels were fully pretensioned transversely to resist panel stresses due to handling, transportation, and placement, as well as vehicle-induced bending. **Figure C.10-1** shows typical panel before installation. Only the longitudinal post-tensioning was needed before traffic could be applied in stage 1.

Half of the transverse pretensioning strands were left protruding from the stage 1 panels. The transverse post-tensioning ducts in the stage 2 panels were placed to match the locations of the protruding pretensioning strands of the stage 1 panels at the longitudinal joint. Post-tensioning strands are placed in these ducts and then coupled to the protruding strands from the first stage construction. These post-tensioning strands, along with an equal amount of pretensioning strands already cast into the panel for handling, transportation, and placement, resist vehicle-induced bending in the stage 2 panels. This detail allows the longitudinal joint to be post-tensioned, making it less susceptible to deterioration. This special detail is indicated in **Figure C.10-2**. **Figure C.10-3** shows the panels prior to being post-tensioned. Additional panels were placed to the right side, forming a longitudinal joint that was also post-tensioned transversely.

Figure C.10-1. Precast panel prior to installation on the Door Creek Bridge.

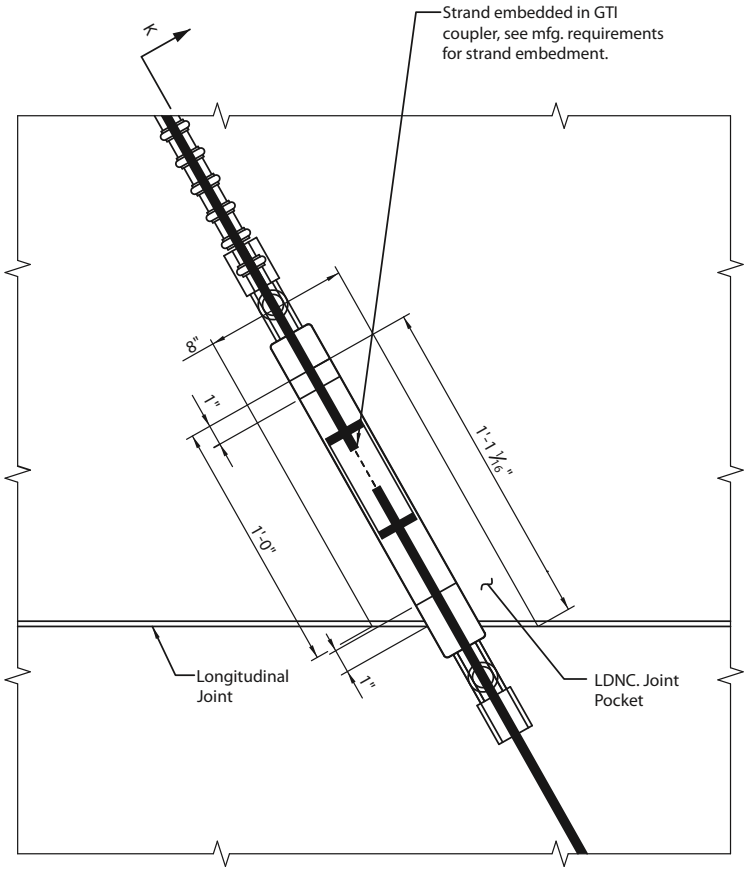

Figure C.10-2. Plan view of longitudinal joint post-tensioning detail.

Figure C.10-3. Panels in place on one-half of the Door Creek Bridge.

C.11 List of Successful Projects

Bridge Name	State	City/ County	Year Completed	Rehab/New	Beam Type	Total Bridge Length	Span Length	Skew	Curvature	Superelevation
Pintala Creek Bridge	Alabama	Montgomery County	pre 1973	New			4 @ 34'			
Chulitna River Bridge	Alaska		1992	Rehab	Steel trusses & stringers	790'		Yes	No	
No. 1257 - South Fork Bonanza Creek Bridge	Alaska		1992	Rehab	Steel, Timber	90'	1 @ 59'-7", 1 @ 30'	No	No	
No. 1439 - Atigun River No. 1 Bridge	Alaska		1992	Rehab	Timber	90'	3 @ 30'	No	No	
CA-17 High Street Overhead Separation Bridge	California		1978	Rehab	Rolled steel	1750'	32 spans @ 30' to 76'	3 spans are skewed	Horizontal	
Oakland-San Francisco Bay Bridge	California	Oakland - San Francisco	1961	Rehab	Cable stayed / Steel truss					
Waterbury Bridge 03200	Connecticut		1989	Rehab	Steel plate girder	700'			Straight pieces on tangent	Yes
Milford-Montague Toll Bridge	Deleware				Truss, steel stringer	1150'	2 @ 275', 2 @ 300'			
Seneca Bridge	Illinois	LaSalle County	1986	Rehab		1510' - 3"	9 @ 60', 2 @ 202' - 1 3/8", 1 @ 364' - 4", 1 @ 201' 9"			
Structure No. 048-0059	Illinois	Knox County		Rehab	Rolled steel		2 @ 43.3', 2 @ 67.6'			
Structure No. 100-0039	Illinois	Williamson County		Rehab	Rolled steel		2 @ 40.5', 2 @ 83.2'			
US-24 Bayview Bridge over the Mississippi River	Illinois / Missouri	Quincy		Rehab	Cable stayed, steel stringers, welded girders		2 @ 200', 2 @ 400', 1 @ 900'			
Bean Blossom Creek Bridge	Indiana	Bloomington			Truss		8 @ 125'	None		None
Big Blue River Bridge	Indiana	Knightstown			Rolled steel	200'	2 @ 70', 1 @ 60'	None		None
Burlington Cable Stayed Bridge	Iowa / Illinois	Burlington	1994	New	Steel	1065'	1 @ 660', 1 @ 405'			
Deer Isle-Sedgwick Bridge over Eggermoggin Reach (Project No. BH-0250)	Maine	Between Little Deer Isle and Sedgwick	1987	Rehab	Rolled shapes		6 @ 65', 2 @ 484', 1 @ 1080'			
William Preston Jr. Memorial Bridge over the Chesapeake Bay	Maryland			Rehab						
Chicopee River Bridge	Massachusetts	Ludlow/ Wilbraham	1984	Rehab	Plate girder	837'				
Connecticut River Bridge	Massachusetts	West Springfield/ Chicopee				1224'	224'			
Amsterdam Interchange Bridge	New York	Montgomery County	1974	Rehab	Steel		1 @ 33', 1 @ 59', 1 @ 66', 1 @ 60'			
Batchellerville Bridge	New York	Saratoga County	1982	Rehab			3075			
Bridge No. 1 - Kingston Bridge on Wurtz Street Over Rondout Creek	New York	Ulster County		Rehab	Suspension bridge w/ steel stringers	1100'	700'			
Bridge No. 6 - Over Delaware River	New York		1978		Steel truss, rolled stringer	675'				
Cochecton Bridge Over Delaware River	New York	Sullivan County		Rehab	steel truss	675'				
Harriman Interchange Bridge	New York	Orange county		Rehab	Steel	75'		Yes	800' Radius horiz.. Curve, Vert.. curve	
Kosciuszko Bridge	New York	Brooklyn-Queens	1971	rehab	Rolled steel			None		None
Krumkill Road Bridge	New York	Albany County	1977	Rehab	Steel	50'		Slight Skew		
Route 155 Bridge over Normanskill State Highway 1928	New York	Guilderland	1972	Rehab						
Southwestern Blvd. Bridge over Cataraugus Creek	New York		1979		Truss, steel stringer	550'		22 degrees		
Vischer Ferry Road Bridge	New York	Schenectandy county		Rehab	Steel					
Dublin 0161 Bridge	Ohio	Columbus	1986	Rehab	Concrete Arch		2 @ 73', 2 @ 95', 2 @ 100'	Yes		
Welland River Bridge	Ontario, Canada	Niagara Falls		Rehab	Rolled steel		1 @ 48' - 9", 2 @ 48'			
Freemont Street Bridge	Pennsylvania	Bellevue	1984	Rehab	Reinforced concrete, no stringers	300'				
NB-216 Quakertown Interchange Bridge	Pennsylvania	Bucks County		Rehab						
NB-750 Clark Summit Bridge	Pennsylvania	Lackawanna County	1980	Rehab		1627'				
A.T. & S.F. Railway Overpass	Texas			Rehab	Rolled steel		50'			
Route 229 Bridge Over Big Indian Run	Virginia	Culpeper	1985	Rehab	Rolled steel	54' - 6"				
Route 235 bridge Over Dougue Creek	Virginia	Fairfax	1982	Rehab	Rolled steel		4 @ 38'			
Route 7 Westbound over Route 50	Virginia	Fairfax County	1999	Rehab	Steel plate girder	110'		Skewed ends		
Woodrow Wilson Memorial Bridge	Virginia / Maryland	Washington D.C.	1983	Rehab	Steel girder, rolled stringers	5,900'				
Route 7 Eastbound over Route 50	Virgnia	Fairfax County	1999	Rehab	Steel Plate girder	138'		Skewed ends		

Bridge Name	Panel Thickness	Bridge Width	Panel Width	Panel Length	Composite/Non-Composite	Concrete Weight	Transfer strength	28 day strength	Strands	Strand Ultimate Strength
Pintala Creek Bridge	6.5"		26'	7'						
Chulitna River Bridge	7.5" @ CL, 7" @ edge	42' - 2"	21' - 3/4"			Normal	5000 psi			
No. 1257 - South Fork Bonanza Creek Bridge	9.5" @ CL, 7.5" @ edge			27'-5 3/8"		Normal	5000 psi	6500 psi	1/2", 7 wire, low relaxation	270 ksi
No. 1439 - Atigun River No. 1 Bridge	9.5" @ CL, 7.5" @ edge			27' - 5 3/8"		Normal	5000 psi	6500 psi	1/2", 7 wire, low relaxation	270 ksi
CA-17 High Street Overhead Separation Bridge	6 1/2"	14' - 2"		30' - 40'						
Oakland-San Francisco Bay Bridge						lightweight				
Waterbury Bridge 03200	8"	27' - 6"	8'	26' - 8"	Composite				0.6", 3 wire	
Milford-Montague Toll Bridge	7 1/2"		15'	12' - 6"					0.6", 4 wire	
Seneca Bridge	6 1/2"							5000 psi	1"	110 ksi
Structure No. 048-0059	7.67"	33.1'	7.35'	18.2'					0.5", 4 wire	269 ksi
Structure No. 100-0039	7.67"	38.7'	18.2'	32' - 7.35'					0.5", 4 wire	270 ksi
US-24 Bayview Bridge over the Mississippi River	9"		46' - 6"	9' to 11'	Composite			3500 psi		
Bean Blossom Creek Bridge										
Big Blue River Bridge			39'	4'						
Burlington Cable Stayed Bridge	10"	87' - 6"	47' - 3" or 38' - 3"	13' - 9"	Composite			6000 psi - 7000 psi	1", 1 3/8"	
Deer Isle-Sedgwick Bridge over Eggermoggin Reach (Project No. BH-0250)	6 1/2"		9' - 11"	variable		Lightweight				
William Preston Jr. Memorial Bridge over the Chesapeake Bay										
Chicopee River Bridge										
Connecticut River Bridge					Non-composite	Lightweight		5000 psi		
Amsterdam Interchange Bridge	8"	45'	4'	22'	Composite					
Batchellerville Bridge				11' - 8" to 13'						
Bridge No. 1 - Kingston Bridge on Wurtz Street Over Rondout Creek	7" @ CL, 6" @ edge		24'	9'						
Bridge No. 6 - Over Delaware River	7 1/2"		13' - 10 1/2", 15' - 4"	7' - 6"						
Cochecton Bridge Over Delaware River	7 1/2"		15' - 4", 13' - 10 1/2"	7' - 6"						
Harriman Interchange Bridge	8"		4'	54'						
Kosciuszko Bridge	6.5"	33'								
Krumkill Road Bridge	7-1/2"		42', 21'	5' - 2"	Composite					
Route 155 Bridge over Normanskill State Highway 1928			6' - 4"	12' - 4", 13' - 4"						
Southwestern Blvd. Bridge over Cataraugus Creek	7 1/2"		21'	8'						
Vischer Ferry Road Bridge										
Dublin 0161 Bridge	Varies	56'	28'	12' - 1 1/2", 9' - 10 1/2", 9' - 6 1/2", 9' - 5 1/2", 10' - 1"	Non-composite					
Welland River Bridge	9"	43' - 6"	7.9'	79.7', 79.3'	Composite				0.6", 4 wire	58.4 kips
Freemont Street Bridge	10"		6' - 8 1/2"	30'						
NB-216 Quakertown Interchange Bridge	6 1/2"		17' - 6"	7' - 7 1/2"		Lightweight				
NB-750 Clark Summit Bridge	6 3/4"		29'	7'	Non-composite					
A.T. & S.F. Railway Overpass		45'	6' - 1 3/8", 6' - 2 3/4"							
Route 229 Bridge Over Big Indian Run		30'	8'	15' - 5"						
Route 235 bridge Over Dougue Creek		36'	7', 7' -6"	17' - 11"						
Route 7 Westbound over Route 50		49'		10'	Composite	Lightweight		5,000 psi	0.6", 7 wire	
Woodrow Wilson Memorial Bridge		8"	46' - 7 1/4"	10' to 12'		Lightweight			0.6", 4 wire	
Route 7 Eastbound over Route 50		49'		10'	Composite	Lightweight		5,000 psi	0.6", 7 wire	

Bridge Name	Jacking Stress	Effective Stress after losses	Joint Type	Shear pocket size	Shear studs	Longitudinal Post-tensioning	Transverse Post-tensioning	Grout
Pintala Creek Bridge								
Chulitna River Bridge			partial depth, female-to-female, w/ backer rod	1'	4 No. 4 bars @ 1' 8" long	none	Mild steel	Magnesium-phosphate
No. 1257 - South Fork Bonanza Creek Bridge	189 ksi	149 ksi	partial depth, female-to-female, w/ backer rod	12" x 5" (60' span), 7" x 5" (30' span)	3 x 7/8" dia. x 6" (60' span), 2 x 7/8" dia. x 6" (30' span)	No	Pre-stressed	
No. 1439 - Atigun River No. 1 Bridge	189 ksi	149 ksi	partial depth, female-to-female, w/ backer rod	7" x 5"	2 x 7/8" dia. x 6"	No	Pre-stressed	
CA-17 High Street Overhead Separation Bridge				12" x 4"	4 - 7/8" dia. X 6"	None		Fast hardening, high strength, sulfate resistant, calcium aluminate
Oakland-San Francisco Bay Bridge								
Waterbury Bridge 03200			partial depth, female-to-female, w/ backer rod	18" x 5" (Tapered)	3 x 7/8" dia.	Yes	Mild steel, minimal pre-stressing	High strength, non-shrink
Milford-Montague Toll Bridge			partial depth, male-to-male, w/ backer rod			Pre & Post-tensioned	Pre-stressed	
Seneca Bridge	45 ksi		male-to-female		2 x 3/4" dia., 4 x 3/4" dia.		Pre-stressed	
Structure No. 048-0059				15.75" x 5.1"			Mild steel	
Structure No. 100-0039				15.75" x 5.1"		Post-tensioned	Mild steel	
US-24 Bayview Bridge over the Mississippi River	105 ksi					Post-tensioned		
Bean Blossom Creek Bridge								
Big Blue River Bridge						Post-tensioned	Pre-tensioned	
Burlington Cable Stayed Bridge	89 kips, 166 kips			9" x 3"		Post-tensioned	Post-tensioned	Class D concrete
Deer Isle-Sedgwick Bridge over Eggermoggin Reach (Project No. BH-0250)			full depth, female-to-female	7" x 4"	2 @ 7/8" dia. x 5"		Mild steel	epoxy mortar
William Preston Jr. Memorial Bridge over the Chesapeake Bay						Post-tensioned	Mild steel	
Chicopee River Bridge								
Connecticut River Bridge			Partial depth, female-to-female, w/ backer rod		7/8" x 8"	Post-tensioned	Pre-tensioned	Non-shrink cement
Amsterdam Interchange Bridge			full depth, female-to-female	5"x7"	C5x9			low modulus epoxy
Batchellerville Bridge								
Bridge No. 1 - Kingston Bridge on Wurtz Street Over Rondout Creek			V-shape male-to-female			bolted with tie rods	Pre-stressed	none
Bridge No. 6 - Over Delaware River			partial depth, female-to-female, w/ backer rod	4" x 4" top, 3" x 3" bottom	6"			epoxy mortar, non-shrink cement
Cochecton Bridge Over Delaware River			partial depth, female-to-female, w/ backer rod					Type II portland cement & mortar sand
Harriman Interchange Bridge						none		
Kosciuszko Bridge								
Krumkill Road Bridge				6" x 19"	4 studs	None		
Route 155 Bridge over Normanskill State Highway 1928			full depth, female-to-female					
Southwestern Blvd. Bridge over Cataraugus Creek			partial depth, female-to-female, w/ backer rod	5 1/2" x 5 1/2"	7/8" x 14" Threaded studs			
Vischer Ferry Road Bridge						none		
Dublin 0161 Bridge						Post-tensioned	Mild steel	Epoxy mortar
Welland River Bridge					8 to 12 @ 7/8" dia.	Post-tensioned	Mild steel	non-shrink
Freemont Street Bridge			female-to-female, w/ backer rod			Post-tensioned		
NB-216 Quakertown Interchange Bridge			partial depth, female-to-female		bulb angle shear connectors	post-tensioned	pre-tensioned	epoxy
NB-750 Clark Summit Bridge						post-tensioned		non-shrink cement
A.T. & S.F. Railway Overpass			full depth, female-to-female	5" x 11" (Tapered)	7/8" dia. x 6"			
Route 229 Bridge Over Big Indian Run			partial depth, female-to-female	5" x 11"	7/8" dia. x 4"	None		high early strength concrete and non-shrink additive
Route 235 bridge Over Dougue Creek			partial depth, female-to-female		5/8" dia.			non-shrink
Route 7 Westbound over Route 50			full depth, female-to-female	Tapered 6" top, 4" bottom		Mild steel, Post-tensioned	Mild steel	latex modified
Woodrow Wilson Memorial Bridge						Post-tensioned	pre-stressed	methacrylate monomer
Route 7 Eastbound over Route 50			full depth, female-to-female	Tapered 6" top, 4" bottom		Mild steel, Post-tensioned	Mild steel	latex modified

APPENDIX D – DESIGN EXAMPLE

ACKNOWLEDGEMENT

This example was originally developed by the following team of George Washington University, Washington D.C.: Sameh S. Badie, Ph.D., PE, Associate Professor, Nghi Nguyen, D.Sc., and Parul Patel, M.Sc., Former Graduate Students.

The prestress loss calculations were updated according to the 2008 Interim Revisions to the *LRFD Specifications* by Sameh S. Badie, Ph.D., PE, Associate Professor, George Washington University, and Kromel Hanna, Ph.D., Post-Doctoral Associate, University of Nebraska-Lincoln.

DESIGN EXAMPLE OUTLINE

D.1 Design Criteria

Design specifications AASHTO *LRFD Specifications* (2008 Interim Revisions)

Bridge type Single span, slab/girder system

Span length 120 ft

Total width 44 ft (two-lane, undivided two-way bridge)

Superstructure Four steel girders spaced at 12 ft with top flange width of the steel girders = 12 in. with a 4 ft cantilever at each end for support of side barriers.

OR

Four BT-72 recast, prestressed concrete girders space at 12 ft.

Deck slab Precast prestressed full-depth concrete panel system

Structural slab thickness = 8 in.

- Article 9.7.5.1 of the *LRFD Specifications* states that the depth of a precast concrete slab excluding any provisions for grinding, grooving, and sacrificial surface, should not be less than 7.0 in.
- Minimum clear concrete cover on top and bottom reinforcement shall be in accordance with the provisions of Article 5.12.3 of *LRFD Specifications*, which are 2.0 and 1.0 in., respectively.

Panel dimensions: 44 ft × 8 ft × 8 in. thick

Geometrical properties of the panel cross section:

$$A = (8 \text{ in.})(8 \text{ ft})(12 \text{ in./ft}) = 768 \text{ in}^2$$

$$I = \frac{(8\text{x}12)(8^3)}{12} = 4096 \text{ in}^4$$

$$S_b = S_t = \frac{(8\text{x}12)(8^2)}{6} = 1024 \text{ in}^3$$

Concrete properties:

Normal weight concrete, density = 0.150 kcf

Concrete compressive strength at 28-day, $f'_c = 6.0$ ksi

E_c = modulus of elasticity of panel at 28 days [*LRFD Specifications* 5.4.2.4]

$$= 33{,}000(0.150)^{1.5}\sqrt{6.0} = 4696 \text{ ksi} \quad \text{[LRFD Eq. 5.4.2.4-1]}$$

Concrete strength at release, $f'_{ci} = 5.0$ ksi

E_{ci} = modulus of elasticity of slab at release

$$= 33{,}000(0.150)^{1.5}\sqrt{5.0} = 4287 \text{ ksi}$$

Reinforcement type: The precast panel system is transversely pretensioned and longitudinally post-tensioned

Pretensioning reinforcement:

½ in. diameter, 270 ksi, low relaxation, 7 wire strands

Prestress force is released at 1 day

E_p = modulus of elasticity of prestressing strands = 28,500 ksi

Ultimate tensile strength f_{pu} = 270 ksi

Yield strength $f_{py} = 0.9 f_{pu} = 0.9 \times 270 = 243$ ksi

Initial prestress just before detensioning the strands =

$$0.75 f_{pu} = (0.75)(270) = 202.5 \text{ ksi}$$

Post-tensioning reinforcement:

1 in. diameter high strength rods, 150 ksi

Conventional reinforcement:

ASTM A615 Grade 60

Curing: Relative humidity (H) = 70%

Steam curing for 1 day

Shear pockets are filled with a non-shrink grout that yields f'_c = 6.0 ksi

Composite system: The precast panel is made composite with the supporting girders. Two cases are considered as follows:

1. Steel girders; where composite action is created by welding 1¼ in. diameter steel studs on the top surface of the girders. The studs are embedded in the panel in prefabricated shear pockets.

Shear studs used in composite steel bridge construction are typically ¾ in. or ⅞ in. in diameter. A recent development is the 1¼ in. diameter studs.[47, 48] The 1¼ in. diameter stud has about twice the strength of a ⅞ in. diameter stud and higher fatigue capacity. Using the 1¼ in. diameter studs will result in the following benefits:

- reduced labor as fewer studs will be welded
- higher construction speed
- reduced possibility of damage to the studs and the top flange of the girder during future deck removal
- smaller shear pockets and lesser amount of grouting material

2. Concrete girders: The web shear reinforcement is extended into the deck as shear connectors.

Time of installation of the precast deck panels on the supporting girders

= 90 days.

Future wearing surface: 2 in. of concrete wearing surface, 0.150 kcf

Side barriers: NJ Barriers, 420 plf, the barrier is 16 in. wide at bottom and 42 in. high. The center of gravity of the barrier is at 5.2 in. from the exterior face.

D.2 DESIGN OF THE PRECAST DECK PANEL SYSTEM

In order to develop the precast deck panel system, the following elements of the system need to be designed in the following order:

1. Design of the positive moment areas between girder lines
2. Design of the panel-to-girder connection for full composite action
3. Design of the negative moment areas over interior girder lines
4. Design of overhang part of the panel
5. Design of the longitudinal reinforcement
6. Miscellaneous issues

Final details of the precast deck panel system are given in **Figures D.2.4.1-1 to D.3-5**.

D.2.1 Design of the Positive Moment Areas between Girder Lines

Article 4.6.2.1.1 of the *LRFD Specifications* states that the deck slab can be analyzed by subdividing it into strips perpendicular to the supporting girders. This method is called the "Strip Method." Also, Article 4.6.2.1.1 states that wherever the strip method is used, the extreme positive moment in any section between girder lines shall be taken to apply to all positive moment regions. Similarly, the extreme negative moment over any interior girder line shall be taken to apply to the negative moment regions at all interior girder lines.

The deck slab is then analyzed as a continuous beam supported by the girders. The girders are considered as rigid supports with zero settlement and their width is taken equal to zero.

Loads applied on the deck slab:

A 12-in. wide strip is considered in the following calculations.

DC: Dead loads due to:

Panel self weight = (8/12)(0.150) = 0.100 k/ft^2 (uniformly distributed load)

Barrier self weight = 0.420 k/ft/side (concentrated load)

DW: Dead load due to:

2 in. concrete wearing surface = (2/12)(0.150) = 0.025 k/ft^2

LL: Live load HL-93 due to truck load and lane load with dynamic allowance and multi-presence factor

Design Limit States and Load Factors (2008 Interim Revisions 3.4.1):

1. STRENGTH I:

Strength I limit state shall be taken to ensure that strength and stability, both local and global, are provided to resist the specified statically significant load combination relating to the normal vehicular use of the bridge without wind.

DC: Minimum = 0.90, Maximum = 1.25

DW: Minimum = 0.65, Maximum = 1.50

LL: 1.75

2. SERVICE I:

Service I limit state shall be used for checking deflection and to control crack width in reinforced concrete structures.

DC: 1.00

DW: 1.00

LL: 1.00

3. SERVICE III:

Service III limit state shall be used for checking tension in prestressed concrete structures with the objective of crack control. (2008 Interim Revisions 3.4.1)

DC: 1.00

DW: 1.00

LL: 0.80

Figure D.2-1 shows the service load moment due to *DC* and *DW* for a 1 ft strip.

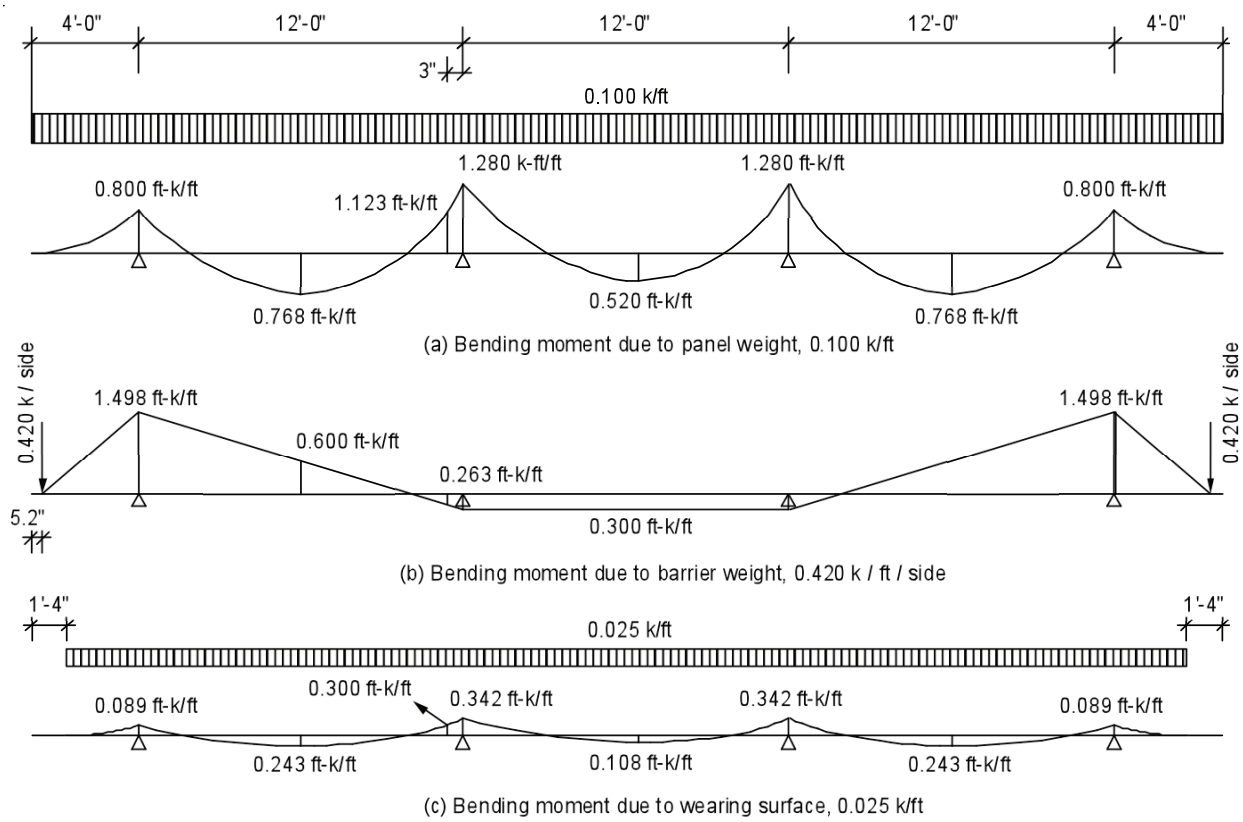

Figure D.2-1. Service load bending moment.

D.2.1.1 Estimate Required Prestress Force

Assume that the tensile stresses at SERVICE III limit state at bottom surface of the panel, f_b, controls the design. The strand group is made concentric with the panel cross-section in order to avoid having the panel deflected upward or downward after releasing of the prestress force, i.e. strand eccentricity e_p = zero, therefore:

$$f_b = \frac{P_{pe}}{A} - \frac{(M_{SERVICE\ III})}{S_b}$$

Investigation of the bending moment (**Figure D.2-1**) shows that the midspan section of the center span controls the design, where:

Panel wt. (*DC*)	M_{panel}	= 0.520 ft-kip/ft
Barrier wt. (*DC*)	$M_{barrier}$	= 0.300 ft-kip/ft
Wearing surface (*DW*)	M_{ws}	= 0.108 ft-kip/ft

Moment due to live load can be determined using the equivalent strip on which the wheels of the 32-kip axle of the design truck will be used. In this case, various combinations of one, two or three trucks with the proper multi-presence factor should be considered to get the maximum moment effects. However, Table A4-1 of the *LRFD Specifications* gives the maximum moment effect based on girder spacing.

Refer to Articles 3.6.1.3.3, 4.6.2.1.2 and Appendix A4 of the *LRFD Specifications*.

Live load, M_{LL+IM} = 8.01 ft-kips/ft

Therefore, at SERVICE III limit state:

$$\begin{aligned} M_{SERVICE\ III} &= 1.0\ M_{DC} + 1.0\ M_{DW} + 0.8\ M_{LL+IM} \\ &= 1.0\ (0.520 + 0.3) + 1.0\ (0.108) + 0.8\ (8.01) \\ &= 7.336 \text{ ft-kips/ft} \\ &= (7.336 \text{ ft-kips/ft})\ (8 \text{ ft/panel}) \\ &= 58.688 \text{ ft-kips/panel} \end{aligned}$$

Assume ½ in. diameter, seven-wire, 270 ksi, low relaxation strands are used

Initial prestress just before detensioning the strands = $0.75f_{pu}$ = (0.75)(270) = 202.5 ksi

Assume that the total prestressed losses (i.e. elastic shortening, creep, shrinkage, and prestress loss) at service = 10%. Therefore, the effective prestress in the strands at service, f_{pe} = (202.5 ksi) (1-0.10) = 182.250 ksi

Effective prestress force $P_{pe} = A_{ps}$ (182.250) kips/strand

Allowable tensile stress in pretensioned members, for components with bonded prestressing tendons or reinforcement that are subjected to not worse than moderate corrosion conditions, (LRFD *Specifications* 5.9.4.2)

$$= 0.19\sqrt{f_c^{'}} = 0.19\sqrt{6.0} = 0.465\ ksi$$

The tensile stress at bottom fiber of the section at SERVICE III limit state is:

$$-0.465 = \frac{P_{pe}}{768} - \frac{(58.688)(12)}{1024}$$

P_{pe} = 171.072 kips = n (0.153 in^2 /strand) (182.250 ksi), where n = number of strands per panel

Therefore, n = 6.135 strands

Try (8) ½-in. diameter, 270 ksi strands per panel, placed on two layers, four strands per layer. For each layer, provide 2 in. clear concrete cover to satisfy the minimum clear concrete cover requirements of Article 5.12.3 of the *LRFD Specifications*.

Since this estimate is based on only satisfying the service tensile stresses in concrete and on estimated prestress losses, the following steps are required to finalize the design of the maximum positive moment section:

1. Determine the exact prestress losses
2. Check concrete stresses
3. Check flexural capacity
4. Check reinforcement limits

D.2.1.2 Estimate Prestress Losses

LRFD Specifications provides two methods to calculate the prestress losses, which are the approximate method (Article 5.9.5.3) and the refined method (Article 5.9.5.4). The refined method is used here as it provides a more accurate measure of prestress losses.

Total prestress losses is:

$\Delta f_{pT} = \Delta f_{pES} + \Delta f_{pLT}$ [LRFD Eq. 5.9.5.1-1]

Where,

Δf_{pES} = sum of all losses or gains due to elastic shortening

Δf_{pLT} = losses due to long-term shrinkage and creep of concrete, and relaxation of steel

$= (\Delta f_{pSR} + \Delta f_{pCR} + \Delta f_{pR1})_{id} + (\Delta f_{pSD} + \Delta f_{pCD} + \Delta f_{pR2})_{df}$ [LRFD Eq. 5.9.5.4.1-1]

$(\Delta f_{pSR} + \Delta f_{pCR} + \Delta f_{pR1})_{id}$ = sum of time-dependent losses between transfer and deck placement

$(\Delta f_{pSD} + \Delta f_{pCD} + \Delta f_{pR2})_{df}$ = sum of time-dependent losses after deck placement (to final age)

Article 5.9.5.4.4 of the *LRFD Specifications* states that for precast elements with no topping, which is the case for full-depth precast deck panel systems, the value for time of "deck placement" may be taken as the value of time of installation of the precast element. In this example, the time of installation of the precast deck is taken 90 days, and the final age is taken 75 years (27,375 days).

The following losses are from transfer to time of installation of the precast deck:

Δf_{pSR} = prestress loss due to shrinkage of concrete

Δf_{pCR} = prestress loss due to creep of concrete

Δf_{pR1} = prestress loss due to relaxation of steel

The following losses are from time of installation of the precast deck to final age:

Δf_{pSD} = prestress loss due to shrinkage of concrete

Δf_{pCD} = prestress loss due to creep of concrete

Δf_{pR2} = prestress loss due to relaxation of steel

The gross section area of the concrete section is used in the prestress losses calculations.

Elastic shortening loss:

$\Delta f_{pES} = (E_p / E_{ct}) f_{cgp}$ [LRFD Eq. 5.9.5.2.3a-1]

Where,

E_p = modulus of elasticity of prestressing strands = 28,500 ksi

f'_{ci} = concrete strength at release = 5.0 ksi

E_{ct} = modulus of elasticity of panel at transfer = 4287 ksi (Note that E_{ct} is the same as E_{ci})

f_{cgp} = the concrete stress at the center of gravity of the prestressing strands due to the prestressing force immediately after transfer and self-weight of the member at the section of maximum moment.

The Commentary to Article 5.9.5.2.3a of the *LRFD Specifications* states that f_{cgp} may be assumed to be 90 percent of the initial prestress before transfer and the analysis iterated until acceptable accuracy is achieved. However, in this example, 1% initial loss is assumed and then checked later.

Strand stress immediately after release = 202.5 (1.00-0.01) = 200.475 ksi

Since the strand group is concentric with the panel cross section, $f_{cgp} = \dfrac{P_i}{A}$

P_i = total prestressing force at release = (8 strands)(0.153 in^2/strand)(200.475 ksi) = 245.38 kips

$$f_{cgp} = \frac{245.381}{768} = 0.320 \text{ ksi}$$

Therefore, loss due to elastic shortening:

$$\Delta f_{pES} = \frac{28,500}{4,287}(0.320) = 2.127 \text{ ksi}$$

$$\text{Initial prestress loss} = \frac{2.127}{202.5} \times 100 = 1.05\%$$

The initial prestress loss is very close to the assumed value, so a second iteration is not necessary.

Time-dependent losses between transfer and time of deck installation:

<u>*Shrinkage of concrete loss*</u>:

$\Delta f_{pSR} = \varepsilon_{bid} E_p K_{id}$ [LRFD Eq. 5.9.5.4.2a-1]

Where, ε_{bid} = concrete shrinkage strain of panel between transfer and deck placement

$\varepsilon_{bid} = k_s \,.\, k_{hs} \,.\, k_f \,.\, k_{td} \,.\, (0.48 \times 10^{-3})$ [LRFD Eq. 5.4.2.3.3-1]

k_s = factor for effect of the volume-to-surface ratio of the component

$= 1.45 - 0.13(V/S) \geq 1.000$ [LRFD Eq. 5.4.2.3.2-2]

Where (V/S) = volume-to-surface ratio (in.) = $\dfrac{(8)(8)(12)}{2[8+(8)(12)]}$=3.692 in.

k_s = 1.45 – 0.13 (3.692) = 0.970 <1.000, therefore use k_s = 1.000

k_{hs} = humidity factor for shrinkage = $(2.00 - 0.014H)$ [LRFD Eq. 5.4.2.3.3-2]

Where H = relative humidity (assume 70%)

Relative humidity varies significantly from one area of the country to another; see **Figure 5.4.2.3.3-1** in the *LRFD Specifications*.

$k_{hs} = 2.00 - 0.014(70) = 1.020$

k_f = factor for the effect of concrete strength = $\dfrac{5}{1+f'_{ci}}$ [LRFD Eq. 5.4.2.3.2-4]

$k_f = \dfrac{5}{1+5} = 0.833$

k_{td} = time development factor = $\dfrac{t}{61-4f'_{ci}+t}$ [LRFD Eq. 5.4.2.3.2-5]

Where t = maturity of concrete, defined as age of concrete between time of loading for creep calculations, or end of curing for shrinkage calculations, and time being considered for analysis of creep or shrinkage effects = 90 – 1 = 89 days

$k_{td} = \dfrac{89}{61-4(5)+89} = 0.685$

$\varepsilon_{bid} = (1.000)(1.020)(0.833)(0.685)(0.48\times10^{-3}) = 2.794\times10^{-4}$

K_{id} = transformed section coefficient that accounts for time-dependent interaction between concrete and bonded steel in the section being considered for the time period between transfer and deck placement

$$K_{id} = \frac{1}{1+\dfrac{E_p}{E_{ci}}\dfrac{A_{ps}}{A_g}\left(1+\dfrac{A_g e_{pg}^{\,2}}{I_g}\right)\left[1+0.7\psi_b(t_f,t_i)\right]}$$ [LRFD Eq. 5.9.5.4.2a-2]

Where,

e_{pg} = eccentricity of prestressing force = zero

$\psi_b(t_f, t_i)$ = creep coefficient at final time due to loading introduced at transfer

$= (1.9)\, k_s \,.\, k_{hc} \,.\, k_f \,.\, k_{td} \,.\, t_i^{-0.118}$ [LRFD Eq. 5.4.2.3.2-1]

t_f = final age = 27,375 days

t_i = age at transfer = 1 day

k_{hc} = humidity factor for creep = $(1.56 - 0.008H)$ [LRFD Eq. 5.4.2.3.2-3]

$= 1.56 - 0.008(70) = 1.000$

k_{td} = time development factor = $\dfrac{t}{61 - 4f'_{ci} + t}$ [LRFD Eq. 5.4.2.3.2-5]

$$= \frac{(27{,}375 - 1)}{61 - 4(5) + (27{,}375 - 1)} = 0.999$$

$\psi_b(t_f, t_i) = (1.9)(1.000)(1.000)(0.833)(0.999)(1)^{-0.118} = 1.581$

$$k_{id} = \frac{1}{1 + \left(\dfrac{28{,}500}{4287}\right)\left(\dfrac{8(0.153)}{768}\right)(1+0)\left[1 + 0.7(1.581)\right]} = 0.978$$

$\Delta f_{pSR} = (2.794\times10^{-4})(28{,}500)(0.978) = 7.788$ ksi

<u>*Creep of concrete loss:*</u>

$$\Delta f_{pCR} = \frac{E_p}{E_{ci}} . f_{cgp} \psi_b(t_d, t_i) . K_{id}$$ [LRFD Eq. 5.9.5.4.2b-1]

$\psi_b(t_d, t_i)$ = creep coefficient = $(1.9)\, k_s \,.\, k_{hc} \,.\, k_f \,.\, k_{td} \,.\, t_i^{-0.118}$ [LRFD Eq. 5.4.2.3.2-1]

$= (1.9)(1.000)(1.000)(0.833)(0.685)(1)^{-0.118} = 1.084$

$$\Delta f_{pCR} = \left(\frac{28{,}500}{4287}\right)(0.320)(1.084)(0.978) = 2.255 \text{ (ksi)}$$

<u>*Relaxation of strands loss:*</u>

$$\Delta f_{pR1} = \frac{f_{pt}}{K_L}\left(\frac{f_{pt}}{f_{py}} - 0.55\right)$$ [LRFD Eq. 5.9.5.4.2c-1]

Where:

f_{pt} = stress in prestressing strands immediately after transfer, taken not less than $0.55fpy$

$= 202.5 - 2.127 = 200.373$ ksi $> 0.55(243) = 133.650$ ksi

K_L = 30 ksi for low relaxation strands

$$\Delta f_{pR1} = \frac{200.373}{30}\left(\frac{200.373}{243} - 0.55\right) = 1.834\ (ksi)$$

Time-dependent losses between time of installation of the precast deck and final age:

Shrinkage of concrete loss:

$\Delta f_{pSD} = \varepsilon_{bdf} E_p K_{df}$ [LRFD Eq. 5.9.5.4.3a-1]

Where, ε_{bdf} = concrete shrinkage strain of panel between deck installation and final age

$= \varepsilon_{bif} - \varepsilon_{bid}$

ε_{bif} = concrete shrinkage strain of panel between initial and final age

$\varepsilon_{bif} = k_s \,.\, k_{hs} \,.\, k_f \,.\, k_{td}\ (0.48\times10^{-3})$ [LRFD Eq. 5.4.2.3.3-1]

k_s = 1.000 (from above) [LRFD Eq. 5.4.2.3.2-2]

k_{hs} = 1.020 (from above) [LRFD Eq. 5.4.2.3.3-2]

k_f = 0.833 (from above) [LRFD Eq. 5.4.2.3.2-4]

k_{td} = time development factor $= \dfrac{t}{61 - 4f'_{ci} + t}$ [LRFD Eq. 5.4.2.3.2-5]

Where t = maturity of concrete, defined as age of concrete between time of loading for creep calculations, or end of curing for shrinkage calculations, and time being considered for analysis of creep or shrinkage effects = 27,375 – 1 = 27,374 days

$$K_{td} = \frac{27{,}374}{61 - 4(5) + 27{,}374} = 0.999 \text{ (same as above)}$$

$\varepsilon_{bif} = (1.000)(1.020)(0.833)(0.999)(0.48\times10^{-3}) = 4.074\times10^{-4}$

$\varepsilon_{bdf} = \varepsilon_{bif} - \varepsilon_{bid} = 4.074\times10^{-4} - 2.794\times10^{-4} = 1.280\times10^{-4}$

K_{df} = transformed section coefficient that accounts for time-dependent interaction between concrete and bonded steel in the section being considered for the time period between deck installation and final time

$$K_{df} = \frac{1}{1 + \dfrac{E_p}{E_{ci}}\dfrac{A_{ps}}{A_c}\left(1 + \dfrac{A_c e_{pc}^{\,2}}{I_c}\right)\left[1 + 0.7\psi_b(t_f, t_i)\right]}$$ [LRFD Eq. 5.9.5.4.2a-2]

Where,

A_c = gross area of the composite section

e_{pc} = eccentricity of prestressing force with respect to the composite section

I_c = Moment of inertia of the composite section

Since the precast panel has no composite topping, $K_{df} = K_{id} = 0.978$

$\Delta f_{pSD} = (1.280\times10^{-4})(28{,}500)(0.978) = 3.568$ ksi

Creep of concrete loss:

$$\Delta f_{pCD} = \frac{E_p}{E_{ci}}.f_{cgp}.\psi_b[(t_f,t_i)-\psi_b(t_d,t_i)].K_{df} + \frac{E_p}{E_c}.\Delta f_{cd}.\psi_b(t_f,t_d).K_{df}$$ [LRFD Eq. 5.9.5.4.3b-1]

Where Δf_{cd} = change of stresses at centroid of prestressing strands due to long-term losses between transfer and deck installation combined with deck weight and superimposed loads. Since the strand group is concentric with the panel cross section, Δf_{cd} = zero

$\psi_b(t_f, t_i) = (1.9)\, k_s \,.\, k_{hc} \,.\, k_f \,.\, k_{td} \,.\, t_i^{-0.118}$ [LRFD Eq. 5.4.2.3.2-1]

$= (1.9)(1.000)(1.000)(0.833)(0.999)(1)^{-0.118} = 1.581$

$\psi_b(t_d, t_i) = (1.9)\, k_s \,.\, k_{hc} \,.\, k_f \,.\, k_{td} \,.\, t_i^{-0.118}$ [LRFD Eq. 5.4.2.3.2-1]

$= (1.9)(1.000)(1.000)(0.833)(0.685)(1)^{-0.118} = 1.084$

$$\Delta f_{pCD} = \left(\frac{28,500}{4287}\right)(0.320)(1.581-1.084)(0.978)+(zero) = 1.034 \text{ (ksi)}$$

Relaxation of strands loss:

$\Delta f_{pR2} = \Delta f_{pR1} = 1.834$ ksi [LRFD Eq. 5.9.5.4.3c-1]

Total losses at transfer (initial losses):

$\Delta f_{pES} = 2.127$ ksi

Stress in tendons after transfer = 202.5 – 2.127 = 200.373 ksi

Prestressing force immediately after transfer = (200.373)(8)(0.153) = 245.257 kips

Total losses at final age (service):

Time-dependent losses,

$\Delta f_{pLT} = (\Delta f_{pSR} + \Delta f_{pCR} + \Delta f_{pR1})_{id} + (\Delta f_{pSD} + \Delta f_{pCD} + \Delta f_{pR2})_{df}$ [LRFD Eq. 5.9.5.4.1-1]

= (7.788+2.255+1.834) + (3.568+1.034+1.834) = 18.313 ksi

Total prestress losses = $\Delta f_{pES} + \Delta f_{pLT}$ = 2.127 + 18.313 = 20.440 ksi

Stress in tendons after all losses, f_{pe} = 202.5 – 20.440= 182.060 ksi

Check prestressing stress limit at service limit state: Table 5.9.3-1 of the *LRFD Specifications* states that $f_{pe} \leq 0.8\, f_{py}$, therefore:

f_{pe} = 182.060 ksi $\leq$ $0.8\, f_{py}$ = 0.8(243) = 194.4 ksi **OK**

Total prestress losses, % = $\frac{(20.440)(100)}{(202.5)}$ = 10.094 %

Since the calculated total prestress losses (10.094%) is close enough to the assumed total losses (10%) used in estimating the required number of strands, no refinement of the required number of strands is done

Prestressing force at service, P_{pe} = (182.060)(8)(0.153) = 222.841 kips

D.2.1.3 Check of Concrete Stresses at Service at the Positive Moment Area

Prestressing force at service, P_{pe} = 222.841 kips

Stress limits for concrete: [LRFD Art. 5.9.4.2]

- Compression stress limits: at SERVICE I limit state:

  Due to live load and 50% of the sum of effective prestress and permanent loads

  $= 0.40\ f'_c = (0.40)(6.0) = +\ 2.4$ ksi

  Due to sum of effective prestress and permanent loads

  $= 0.45\ f'_c = (0.45)(6.0) = +\ 2.7$ ksi

  Due to effective prestress, permanent loads, and transient loads

  $= 0.6\ f'_c = (0.6)(6.0) = +\ 3.6$ ksi

- Tensile stress limits: For components with bonded prestressing tendons, limit state Service III

  $$= -0.19\sqrt{f_c^{'}} = -0.19\sqrt{6.0} = -0.465\ ksi$$

<u>Concrete stress at the top fiber of the deck, SERVICE I:</u>

Under permanent and transient loads, SERVICE I:

$$f_t = +\frac{P_{pe}}{A} + \frac{(M_{SERVICE\ I})}{S_t}$$

	Due to live load and 50% of the sum of effective prestress and permanent loads	Due to sum of effective prestress and permanent loads	Due to effective prestress, permanent loads, and transient loads
$M_{SERVICE\ I}$ =			
$(1.0)M_{DC}$ +	(1.0)(0.520 + 0.3)(0.5) +	(1.0)(0.520 + 0.3) +	(1.0)(0.520 + 0.3) +
$(1.0)M_{DW}$ +	(1.0)(0.108)(0.5) +	(1.0)(0.108)	(1.0)(0.108)
$(1.0)M_{LL+IM}$	(1.0)(8.01)		+ (1.0)(8.01)
	= 8.47 ft-kips/ft ×8 ft = 67.8 ft-kips/panel	= 0.93 ft-kips/ft ×8 ft = 7.44 ft-kips/panel	= 8.94 ft-kips/ft ×8 ft = 71.52 ft-kips/panel
f_t	$0.5\left(\frac{222.841}{768}\right)+\frac{(67.8)(12)}{1024}$ + 0.940 ksi	$\frac{222.841}{768}+\frac{(7.44)(12)}{1024}=$ + 0.377 ksi	$\frac{222.841}{768}+\frac{(71.52)(12)}{1024}=$ + 1.128 ksi
Stress limit	+ 2.4 ksi	+ 2.7 ksi	+ 3.6 ksi
Check	O.K.	O.K.	O.K.

<u>Concrete stress at the bottom fiber of the deck, SERVICE III:</u>

$$f_b = \frac{P_{pe}}{A} - \frac{(M_{SERVICE\ III})}{S_b}$$

$M_{SERVICE\ III}$ = 58.688 ft-k/panel (see Section D2.1-1 of this example)

$$f_b = \frac{222.841}{768} - \frac{(58.688)(12)}{1024} = -\ 0.398 \text{ ksi}$$

Tensile stress limit: -0.465 ksi **OK**

D.2.1.4 Check of Flexural Strength

Moment due to STRENGTH I Limit State (LRFD, Art. 3.4.1),

$$M_{STRENGTH\ I} = 1.25\ M_{DC} + 1.5\ M_{DW} + 1.75\ M_{LL+IM}$$

$$= 1.25\ (0.520 + 0.300) + 1.5\ (0.108) + 1.75\ (8.010)$$

$$= 15.205 \text{ ft-kips/ft}$$

$$\times 8 \text{ ft/panel} = 121.640 \text{ ft-kips/panel}$$

The design procedure given by the *LRFD Specifications* (Art. 5.7.3.1.1) cannot be used with this case because the LRFD procedure assumes that the strand group is lumped at the center of gravity of the group. In this example, there are two layers of strands that are far away from each other, one layer is close to the top fiber and the second layer is close to the bottom layer. Therefore, the *LRFD Specifications* procedure will significantly under-estimate the flexural strength.

In this example, the flexural strength is determined using the strain compatibility approach and the power stress-strain formula for all types of reinforcement. The analysis procedure of the strain compatibility approach can be found in Section 8.2.2.5 of the *PCI Bridge Design Manual.*[49] The analysis uses an iterative process, where the stress in every layer of reinforcement is assumed and the depth of the equivalent compression block is determined based on the assumed values. Then, the stress in every layer of reinforcement is determined and checked against the assumed values. If the assumed and calculated values do not match, a second iteration is required using the values of the reinforcement stresses determined from the previous round of calculations.

Assume that net stress in the top and bottom layer of strands at ultimate is 243 ksi tension. Note that this value is chosen arbitrary and will be checked later.

From equilibrium of forces, $T = C$

Where: T = Tension force in strands = $A_{ps}\ (f_{ps})$

C = Compression force in concrete = $0.85(f'_c)(b)(a)$

b = Width of section = (8)(12) = 96 in.

$$[(4)(0.153)(243)] + [(4)(0.153)(243)] = (0.85)(6)(96)(a)$$

Depth of rectangular stress block, $a = 0.608$ in.

Distance from top of section to neutral axis, $c = a/\beta_1$

$$\beta_1 = 0.85 - 0.05(f'_c - 4) = 0.85 - 0.05(6 - 4) = 0.75$$

$$c = 0.608/0.75 = 0.811 \text{ in.}$$

<u>Check the assumed stresses in each layer of strands:</u>

- *Top layer:*

  Depth of top layer = 2.25 in.

  Decompression stress, f_{pe} = 182.060 ksi (tension)

  Decompression strain = $\dfrac{182.060}{28,500} = 6.388\times10^{-3}$

Total strain, $\varepsilon_p = 0.003(\frac{2.25-0.811}{0.811}) + 6.388\times10^{-3} = 5.323\times10^{-3} + 6.388\times10^{-3} = 11.711\times10^{-3}$

Based on the power stress-strain formula developed by Devalapura and Tadros [Section 8.2.2.5 in the *PCI Bridge Design Manual*[49]]

$$f_{ps} = \varepsilon_p E_p \left[Q + \frac{(1-Q)}{\left\{1+\left(\frac{E_p\varepsilon_p}{Kf_{py}}\right)^R\right\}^{1/R}} \right] \le 270\ ksi$$

Where:

Q is a calibration factor used in the power equation.

$$f_{ps} = (11.711\times10^{-3})(28{,}500)\left[0.031 + \frac{(1-0.031)}{\left\{1+\left(\frac{(28{,}500)(11.711\times10^{-3})}{(1.04)(243)}\right)^{7.36}\right\}^{1/7.36}}\right] =$$

= 251.223 ksi < 270 ksi

Therefore, f_{ps} = 251.223 ksi

- *Bottom layer:*

Depth of bottom layer = 5.75 in.

$$\varepsilon_p = 0.003\left(\frac{5.75-0.811}{0.811}\right) + 6.388\times10^{-3} = 18.270\times10^{-3} + 6.388\times10^{-3} = 24.658\times10^{-3}$$

$$f_{ps} = (24.658\times10^{-3})(28{,}500)\left[0.031 + \frac{(1-0.031)}{\left\{1+\left(\frac{(28{,}500)(24.658\times10^{-3})}{(1.04)(243)}\right)^{7.36}\right\}^{1/7.36}}\right] =$$

= 266.653 ksi < 270 ksi

Therefore, f_{ps} = 266.653 ksi

Since the calculated stresses do not match the assumed values, a second round of calculations is required. In this round of calculations, assume that the stress at the top layer of strands = 251.223 ksi and at the bottom layer of strands = 266.653 ksi. This iterative process should be continued

until the calculated values match the assumed values. Results of the final round of calculations are as follow:

Depth of rectangular stress block, a = 0.644 in.

Depth of the neutral axis, c = 0.859 in

Strain in top layer of strands = 11.250×10^{-3} (tension)

Stress in top layer of strands = 249.579 ksi (tension)

Strain in bottom layer of strands = 23.470×10^{-3} (tension)

Since the total strain in this layer is > 0.005, the strength reduction factor according to Article 5.5.4.2.1 of the *LRFD Specifications* = 1.0

Stress in bottom layer of strands = 265.597 ksi (tension)

The flexural capacity of the section:

$$\phi M_n = \phi \sum\left[A_{ps}(f_{ps})\left(d_p - \frac{a}{2}\right) + A_s(f_s)\left(d_s - \frac{a}{2}\right)\right]$$

$$= 1.0\left[(4)(0.153)(249.579)\left(2.25 - \frac{0.644}{2}\right) + (4)(0.153)(265.597)\left(5.75 - \frac{0.644}{2}\right)\right]$$

= 1,176.777 in-kips/panel

= 98.065 ft-kips/panel < $M_{STRENGTH\ I}$ = 121.640 ft-kips/panel **NG**

- Since the flexural capacity is not safe, add two layers of Grade 60 bars. The first layer close to the top fiber of the section and the second layer close to the bottom fiber of the section. Each layer consists of 4 No. 5, Grade 60 steel, with a 2 in. clear concrete cover. Assume that the decompression stress in both layers = 25 ksi (compression). Using the strain compatibility procedure, results of the final round of calculations are as follows:

  Depth of rectangular stress block, a = 0.906 in.

  Depth of the neutral axis, c = 1.208 in.

  Strain in top layer of strands = 8.976×10^{-3} (tension)

  Stress in top layer of strands = 232.053 ksi (tension)

  Strain in top layer of No. 5 bars = 1.880×10^{-3} (tension)

  Stress in top layer of No. 5 bars = 54.546 ksi (tension)

  Strain in bottom layer of strands = 17.670×10^{-3} (tension)

  Since the total strain in this layer is > 0.005, the strength reduction factor according to Article 5.5.4.2.1 of the *LRFD Specifications* = 1.0

  Stress in bottom layer of strands = 260.306 ksi (tension)

  Strain in bottom layer of No. 5 bars = 10.260×10^{-3} (tension)

  Stress in bottom layer of No. 5 bars = 60.000 ksi (tension)

The flexural capacity of the section:

$$\phi M_n = 1.0\left[(4)(0.153)(232.053)\left(2.25-\frac{0.906}{2}\right)+(4)(0.153)(260.306)\left(5.75-\frac{0.906}{2}\right)\right]$$

$$+1.0\left[(4)(0.31)(54.546)\left(2.3125-\frac{0.906}{2}\right)+(4)(0.31)(60)\left(5.6875-\frac{0.906}{2}\right)\right]$$

= 1,614.171 in-kips/panel

= 134.514 ft-kips/panel > $M_{STRENGTH\ I}$ = 121.6 ft-kips/panel **OK**

D.2.1.5 Check of Maximum Reinforcement Limit (*LRFD Specifications* 5.7.3.3.1)

The maximum reinforcement limit is already incorporated in the strength reduction factor, as shown in Section D.2.1.4 of this example.

In editions of and interims to the *LRFD Specifications* prior to 2005, Article 5.7.3.3.1 limited the tension reinforcement quantity to a maximum amount such that the ratio (c/d_e) did not exceed 0.42, where c = the neutral axis depth and d_e is effective depth of the steel reinforcement.

$$d_e = \frac{A_{ps}f_{ps}d_p + A_s f_y d_s}{A_{ps}f_{ps} + A_s f_y} = 4.0 \text{ in. (due to symmetry of reinforcement)}$$

$$\frac{c}{d_e} = \frac{1.208}{4.00} = 0.302 \le 0.42 \qquad \textbf{OK}$$

D.2.1.6 Check of Minimum Reinforcement Limit (*LRFD Specifications* 5.7.3.3.2)

Article 5.7.3.3.2 states that the amount of prestressed and nonprestressed tensile reinforcement shall be adequate to develop a factored flexural resistance, M_r, at least equal to 1.2 M_{cr}, where:

$$M_{cr} = S_c(f_r + f_{cpe}) - M_{dnc}\left(\frac{S_c}{S_{nc}} - 1\right) \qquad \text{[LRFD Eq. 5.7.3.3.2-1]}$$

Where,

S_c = section modulus for the extreme fiber of the composite section where tensile stress is caused by externally applied loads (in^3)

S_{nc} = section modulus for the extreme fiber of the monolithic or non-composite section where tensile stress is caused by externally applied loads (in^3)

Since there is no composite topping, $S_c = S_{nc} = 1024\ in^3$

f_{cpe} = compressive stress in concrete due to effective prestress forces only (after allowance for all prestress losses) at extreme fiber of section where tensile stress is caused by externally applied loads (ksi) $= \dfrac{222.841}{768} = 0.290\ ksi$

f_r = Allowable tensile stress in pretensioned members (LRFD Table 5.9.4.2.2-1)

$$= 0.19\sqrt{f_c'} = 0.19\sqrt{6.0} = 0.465\ ksi$$

M_{dnc} = total unfactored dead load moment

$1.2\ M_{cr}$ = 1.2 [1024 (0.465+0.290) – zero] = 927.744 in-kips

= 77.312 ft-kips

< ϕM_n = 134.514 ft-kips **OK**

D.2.2 Design of Panel–to–Girder Connection for Full Composite Action

Shear connectors that are fully anchored with the girder are extended into the deck panel to create full composite action between the deck panels and the girders. Typically, this is achieved by creating shear pockets in the panel over girder lines to accommodate the shear connectors. The shear connectors have to be clustered in groups to match the locations of these shear pockets. As a rule of thumb, the fewer the number of shear pockets that a precast panel has, the less expensive the panel will be due to savings on time and labor associated with forming of these pockets.

The *LRFD Specifications* do not provide any guidelines on the maximum spacing between the stud clusters. It has been a common practice to limit the maximum spacing to 24 in. based on the recommendations given by the LRFD specifications for shear connectors used with cast-in-place deck slabs. Recently, the idea of extending the maximum spacing to 48 in. for clustered studs has been investigated in the NCHRP 12-65.[1] The investigation has shown that extending the spacing between clusters of studs to 48 in. has no detrimental effect on the composite action. In this example, 48 in. spacing is considered.

In order to determine the size of the shear pockets of the precast panel, either for use with steel or precast concrete girders, it is required to determine the amount of shear connector reinforcement

that is required. Two cases are considered in this example: (1) steel girders, and (2) concrete girders.

More information on the design of cluster of studs at 48 in. can be found in references 50 and 51.

The calculations provided in this section are for illustration purposes only and are not to be used for all bridge projects. It is the responsibility of the design engineer to design the horizontal shear reinforcement in lieu of the design of the composite slab/girder system of the bridge being considered. Since the design parameters of the composite slab/girder system are not given in this example, an empirical approach, developed based on a parametric study conducted in NCHRP 12-41[3], is used here to estimate the number and size of the required shear connectors.

Steel girder bridges:

As stated in the design criteria, 1¼ in. diameter studs[46, 47] are used as the shear connectors. The use of this large size studs is advantageous for precast deck panel systems because one 1¼ in. diameter stud replaces two ⅞ in. diameter studs, which will reduce the size of the shear pockets and the amount of grouting material needed to fill them.

In a study conducted in NCHRP 12-41,[3] the researchers conducted a parametric study for the horizontal shear requirement for a wide range of simply supported bridges, where the span length ranged from 40 to 130 ft and the girder spacing ranged from 6 to 12 ft. The researchers found that using 1¼ in. studs uniformly spaced at 6 in. throughout the span of the bridge would sufficiently satisfy the horizontal shear requirements.

Therefore, for the precast panel system in this example, if the clusters of studs are spaced at 48 in., each cluster will have (8) 1¼-in. studs. Using two studs per row, and the stud rows spaced at 6 in., the shear pocket will be 12 in. wide (in the transverse direction) and 24 in. long (in the longitudinal direction). Note, that the 6 in. stud spacing satisfies the LRFD specifications that set the minimum stud spacing to four times the stud diameter.

Concrete girder bridges:

For precast concrete girders, typically, the vertical shear reinforcement is extended above the top flange to provide the required horizontal shear reinforcement. The vertical shear reinforcement usually takes an L-shape or an inverted U-shape to provide for anchorage and fully develop the yield strength of the reinforcement. Although this detail provides an inexpensive way to provide for the composite action, it is not convenient for the production of the precast concrete girders. This is because the locations of the shear pockets have to be pre-determined, and only the shear reinforcement within these locations should extend outside the top flange. For this reason, it is recommended to separate the vertical shear reinforcement of the precast girder from the horizontal shear reinforcement required for full composite action. This can be done by providing for the horizontal shear reinforcement in the form of separate inverted U-shape bars that are installed only in the shear pocket locations.

To determine the amount of reinforcement required per shear pocket, the design examples provided in Chapter 9 of the PCI-Bridge Design Manual[48] were studied. Four design examples of slab/I-girder bridge systems are given in this reference, where the bridge structures range from simply supported span to three continuous span structures, with a span length up to 120 ft and girder spacing from 9 to 12 ft. Studying these examples reveals that the maximum horizontal factored shear force at the interface between the deck slab and the precast concrete girders is about 3.7 kip/in. of the girder length.

Therefore, the required horizontal nominal shear strength per panel

$= 3.7(w)/\phi$

Where $\phi = 0.9$

w = panel length

V_n = (3.7 kip/in.)(96 in.)/(0.9) = 395 kips

The shear connector system consists of individual inverted No. 5 U-bars that are embedded in the top flange of the girder and extended into the panel shear pockets. The inverted U-bars are clustered at 48 in. This detail has been successfully used on bridges in Nebraska.

Using (6) No. 5 U-bars per pocket spaced at 7 in., two U-bars per row, the pocket will be 12 in. wide (in the transverse direction) and 24 in. long (in the longitudinal direction).

The nominal shear resistance of the interface plane is:

$V_n = c\,A_{cv} + \mu\,(A_{vf} f_y + P_c)$ [LRFD Eq. 5.8.4.1-3]

Where:

c = cohesion factor = 0.24 ksi for concrete placed against clean, hardened concrete with surface intentionally roughened to an amplitude of 0.25 in. (LRFD Sect. 5.8.4.3)

μ = friction factor = 1.0 for concrete placed against clean, hardened concrete with surface intentionally roughened to an amplitude of 0.25 in. [LRFD Sect. 5.8.4.3]

A_{cv} = area of concrete engaged in shear transfer

= (12 in.)(24 in.)(2 pockets) = 576 in^2

(Note: the width of the pocket has to be less than the width of the top flange of the concrete girder)

f_y = shear reinforcement strength = 60 ksi

P_c = permanent net compressive force normal to the shear plane; if force is tensile, P_c = 0

(Note: P_c = zero because the panel weight is ignored)

A_{vf} = area of shear reinforcement crossing the shear plane

= [(6) No. 5 U-bars × 2 legs × 0.31 in^2/leg)](2 pockets) = 7.44 in^2/panel

V_n = (0.24 ksi)(576 in^2) + 1.0(7.44)(60 ksi)

= 584.64 kips/panel > 396 kips/panel **OK**

D.2.3 Design of the Negative Moment Areas over Interior Girder Lines

The design of the negative moment section provided in this section is conducted on the precast panel after the shear pockets are grouted. It is assumed in these calculations that the grout material has the same concrete strength as the precast concrete panel, i.e. 6.0 ksi.

The reader should note that the negative moment section should also be checked at time of prestress release and at time of installing the panel on the bridge. At these stages, the cross section of the panel after subtracting the shear pockets should be used as the effective concrete area. These calculations are given in Section 2.6 of this example.

Article 4.6.2.1.6 of the *LRFD Specifications* states that the critical section for flexural design at the negative moment area should be at a specific distance from the centerline of the support. This distance is defined as follows:

- For slabs supported on concrete I-shape girders: The least of 15 in. or ⅓ of the width of the flange of the concrete girder
- For slabs supported on steel girders: ¼ the width of the flange of the steel girder from centerline of the support

In this section, the precast deck panels are assumed to be supported on steel girders because this type of support provides higher flexural effects in the slab compared to any concrete girders.

Assume that the minimum width of steel girder top flange is 12 in., therefore at 12/4 = 3 in. from the centerline of the support, the bending moment is as follows:

Slab wt. M_{slab} = -1.123 ft-kips/ft

Barrier wt. $M_{barrier}$ = +0.263 ft-kips/ft

Wearing surface M_{ws} = -0.300 ft-kips/ft

Live load M_{LL+IM} = -9.400 ft-kips/ft [Table A4.1, *LRFD Specifications*]

$M_{STRENGTH\ I}$ = 1.25 (*DC*) + 1.5 (*DW*) + 1.75 (*LL+IM*)

= 1.25(-1.123+0.263) + 1.5(-0.300) + 1.75(-9.40)

= -17.98 ft-kips/ft

× 8 ft/panel = -143.84 ft-kips/panel

Try two layers of reinforcement, each layer has (4) ½-in. strands and (6) No.5 bars. Provide a 2.0 in. clear concrete cover over each layer. The decompression stress in the strands, f_{pe} = 182.060 ksi (tension), and in the No. 5 bars = 25 ksi (compression), are shown in Section D.2.1.2 and D.2.1.4 of this example respectively. Using the Strain Compatibility analysis in conjunction with the power formula,[48] the final round of calculations yields the following results:

Depth of the rectangular stress block, a = 0.988 in.

Depth of the neutral axis, c = 1.317 in

Strain in top layer of strands = 16.490×10^{-3} (tension)

Stress in top layer of strands = 259.080 ksi (tension)

Strain in top layer of No. 5 bars = 9.094×10^{-3} (tension)

Stress in top layer of No. 5 bars = 60.000 ksi (tension)

Strain in bottom layer of strands = 8.513×10^{-3} (tension)

Since the total strain in this layer is > 0.005, the strength reduction factor according to Article 5.5.4.2.1 of the *LRFD Specifications* = 1.0

Stress in bottom layer of strands = 225.620 ksi (tension)

Strain in bottom layer of No. 5 bars = 1.406×10^{-3} (tension)

Stress in bottom layer of No. 5 bars = 40.762 ksi (tension)

The flexural capacity of the section:

$$\phi M_n = \phi \sum \left[A_{ps}(f_{ps})\left(d_p - \frac{a}{2}\right) + A_s(f_s)\left(d_s - \frac{a}{2}\right)\right]$$

= 1,793.473 in.-kips./panel = 149.456 ft-kips/panel

> $M_{strength\ I}$ = 143.84 ft-kips/panel OK

Since the maximum negative moment at the interior supports dies very quickly, provide two of the (6) No. 5 bars on each layer for 3 ft (i.e. one-fourth of the girder spacing) on each side of the girder line. This distance is adequate to cover the negative moment area over the interior supports and to fully develop these bars. The rest of the No. 5 bars (four No. 5 bars on each layer) are provided for the full length of the panel. This is because they are serving both the positive and negative moment areas.

D.2.4 Design of the Overhang (negative moment section at exterior girder line)

Most of the highway agencies have their own policies regarding the design of the overhang. This section provides the design of overhang according to the guidelines given in Article A13.4.1 of the *LRFD Specifications*, where the overhang should be designed for the following cases separately.

D.2.4.1 Case I: Due to Transverse Vehicular Collision Loads Using Extreme Event Limit State II

Since the New Jersey Barrier adopted in this example is crash tested, and since the LRFD states that the deck should be stronger than the railing system used, the collision moment and the horizontal collision force will be determined based on the reinforcement and geometry of the New Jersey Barrier as follows:

The base of the NJ Barrier is 16 in. wide and reinforced with No. 5 closed stirrups at 12 in. spacing. One leg of the stirrup is close to the inner face of the barrier and the other leg is close to the exterior face of the barrier. Using a 2 in. clear concrete cover over each layer and using the strain compatibility analysis,[48] the nominal flexural capacity of the section = 286.2 in.-kips/ft.

Article 1.3.2.1 of the *LRFD Specifications* states that the strength reduction factor for the Extreme Event Limit State, $\phi = 1.0$. Therefore, the flexural capacity of the base section is:

M_{base} = 1.0 × 286.2 in.-kips/ft = 23.85 ft-kips/ft

In order to complete the design of the overhang, it is required to determine the total transverse resistance of the barrier, R_W, and the critical length of the wall failure, L_c, at the top surface of the barrier. Typically, these parameters depend on the barrier dimensions and failure mechanisms. Since the calculations of these parameters are beyond the scope of this document, they are taken from the following publication:

> National Highway Institute. *Load and Resistance Factor Design of Highway Bridges*, NHI Course No 13061, Publication No FHWA HI-95. Federal Highway Administration.[52]

In lecture 16 of this publication, a NJ Barrier identical to the NJ Barrier used in this example is considered, and the values for R_w and L_c are as follow:

R_W = 147.03 kips, L_c = 13.589 ft

To determine the tensile force at the base of the barrier, T_{base}, assume that R_w is distributed over a distance of (L_c + 2H) at the barrier base, where H is the height of the barrier, H = 42 in.

$T_{base} = R_W / (L_c + 2H) = 147.03 / [13.589 + (2)(42/12)] = 7.14$ kips/ft

Therefore, due to the collision force, the following straining actions are transferred to the precast panel at the inner face of the barrier:

M_{base} = 23.85 ft-kips/ft and T_{base} = 7.14 kips/ft (tension force)

Two sections of the overhang need to be checked. The first section is at the inner face of the barrier (Section 1-1, **Figure D.2.4.1-1**) and the second section is at 3 in. from the centerline of the exterior girder line (Section 2-2, **Figure D.2.4.1-1**).

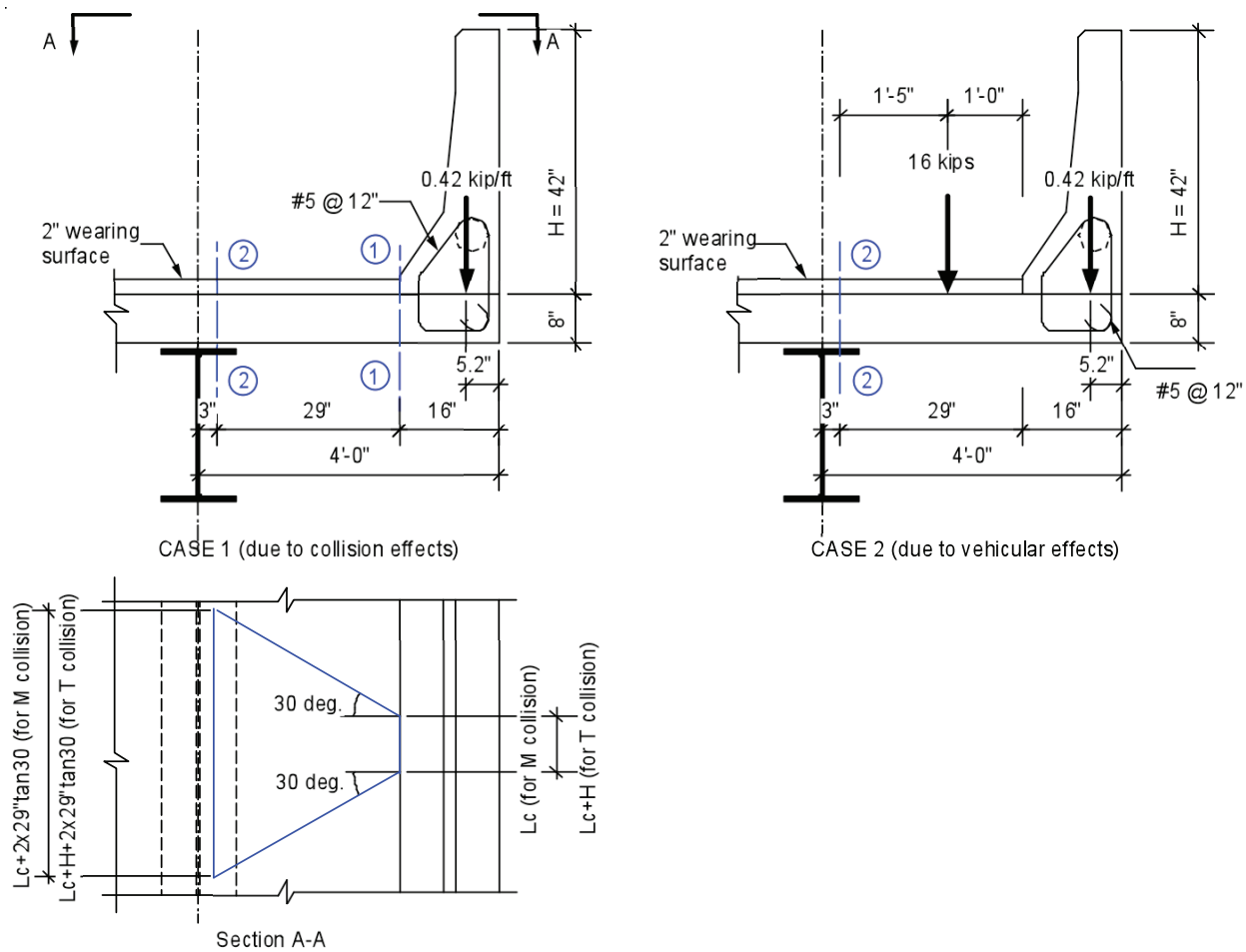

Figure D.2.4.1-1. Overhang design parameters.

Check capacity of section 1-1:

M_{base} = 23.850 ft-kips/ft

T_{base} = 7.14 kips/ft

$M_{barrier}$ = (0.420)(16-5.2)/12 = 0.378 ft-kips/ft

M_{slab} = $(0.100)(16/12)^2/2$ = 0.089 ft-kips/ft

$M_{SERVICE\ I}$ = 23.850 + 0.378 + 0.089 = 24.317 ft-kips

$M_{EXTREME\ EVENT\ II}$ = $1.25DC + 1.5DW + 1.0CT$

= 1.25(0.378+0.089) + 1.0(23.85)

= 24.434 ft-kips/ft = 195.472 ft-kips /panel

$T_{EXTREME\ EVENT\ II}$ = (1.0)(7.14) = 7.14 kips/ft = 57.12 kips /panel

As a starting point, assume that this section is reinforced with the same amount of reinforcement provided at the interior girder lines, which is: two layers of Grade 270 strands, each layer has (4) ½ in. strands, and two layers of Grade 60 steel, each layer has (2) No. 5 bars.

Since section (1-1) is 16 in. away from the edge of the panel, it is required to check the maximum strength that can be provided by the reinforcement based on the available embedment length.

For the ½ in. strands, the development length is,

$$\ell_d = \kappa[f_{ps} - (2/3)f_{pe}]\ d_b \qquad \text{[LRFD Eq. 5.11.4.2-1]}$$

$$= \left(259.080 - \frac{(2)(182.060)}{3}\right)(0.5)$$

= 68.9 in./12 = 5.74 ft

Where:

κ = 1.0 for pretensioned panels with depth equal to or less than 24 in.

The value of f_{ps} is taken from the calculations of the negative moment section over the interior girder lines.

Available strength = $259.080\left(\frac{16-2}{68.9}\right)$ = 52.643 ksi

It is assumed that the strands are recessed 2 in. from the edge of the panel to satisfy the corrosion protection requirements. It is clear that the strands can develop only a small amount of their tensile strength. Therefore, they will be ignored in the analysis of this section.

The development length for the No.5 Grade 60 straight bars,

$$\ell_d = greater \left| \begin{array}{l} \dfrac{1.25 A_b f_y}{\sqrt{f_c'}} \\ 0.4 d_b f_y \end{array} \right\rangle \qquad \text{[LRFD Art. 5.11.2]}$$

$$= greater \left| \begin{array}{l} \dfrac{(1.25)(0.31)(60)}{\sqrt{6.0}} = 9.5 \\ (0.4)(\dfrac{5}{8})(60) = 15.0 \end{array} \right\rangle = 15 in.$$

Assume that the No.5 bars are epoxy coated. Since the concrete cover is > 3 d_b and the bar spacing is > $6d_b$, (LRFD, Article 5.11.2.1.2) therefore,

ℓ_d = (1.2)(15) = 18 in.

Available strength, $f_s = 60\left(\dfrac{16-2}{18}\right)$ = 46.7 ksi

It is assumed that a 2 in. clear concrete cover is provided from the edge of the panel to the No. 5 bars to satisfy the corrosion protection requirements.

Based on the available strength of the strands, it is clear that section 1-1 should be designed as a partially pretensioned section. However, to simplify the calculations, this section is designed as a conventionally-reinforced section, ignoring the prestressed strands.

In addition to the (4) No. 5 bars, provide (17) No. 7 bars close to the top surface of the deck with 2 in. clear. In order to make the maximum benefit of these bars, provide them with a 90-degree standard hook where the tail of the standard hook will be embedded in the barrier. This detail is selected because the thickness of the panel and the required concrete cover do not provide enough distance to provide for a 180-degree standard hook within the panel thickness.

The development length of the No. 7 bar standard hook is:

$$\ell_d = \frac{38.0 d_b}{\sqrt{f_c'}} = \frac{(38.0)\left(\frac{7}{8}\right)}{\sqrt{6.0}} = 13.6 \text{ in.} > (8d_b \text{ and } 6.0 \text{ in.}) \qquad \text{[LRFD Eq. 5.11.2.4.1-1]}$$

For epoxy coated bars, ℓ_d = (1.2)(13.6) = 16.3 in. [LRFD, Sect. 5.11.2.4.2]

Available strength, $f_s = 60\left(\dfrac{16-2}{16.3}\right)$ = 51.5 ksi

Therefore, the total reinforcement provided at this section (ignoring the strands) is as follows:

Layers	Type	Area (in^2)	Depth from bottom fiber (in.), d_s	Maximum developed strength (ksi)
(2) No. 5 top	Straight bar	2(0.31) = 0.62	8-2-0.5(5/8) = 5.6875	46.7
(17) No. 7 top	90-degree standard hook	17(0.60) = 10.2	8-2-0.5(7/8) = 5.5625	51.5
(2) No. 5 bottom	Straight bar	2(0.31) = 0.62	2+0.5(5/8) = 2.3125	46.7

Depth of the plastic center of the cross section (measured from bottom fiber) =

$$= \frac{[46.7-(0.85)(6)][(0.62)(5.6875)+(0.62)(2.3125)]+[51.5-(0.85)(6)][(10.2)(5.5625)]+(0.85)(6)(96)(8)(4)}{[46.7-(0.85)(6)](0.62+0.62)+[51.5-(0.85)(6)](10.2)+(0.85)(6)(96)(8)}$$

= 4.167 in.

Assume that the three layers of reinforcement are on the tension side of the neutral axis, and that the stress in these layers equal to the maximum developed strength, therefore:

$T_{EXTREME\ EVENT\ II}$ $= T - C$

57.12 $= (46.7)(0.62+0.62) + (51.5)(10.2) - (0.85)(6)(96)(a)$

a = 1.075 in.

c $= (a/\beta_1) = 1.075/0.75 = 1.433$ in.

The assumption, that all layers of reinforcement are on the tension side of the neutral axis, is valid.

Check the stress in each layer:

(2) No. 5 top: $\varepsilon_s = 0.003\dfrac{(d_s - c)}{c} = 0.00891 > 0.002$,

Therefore, f_s = lesser of 60.0 or 46.7 ksi,; use 46.7 ksi (tension)

Since $\varepsilon_s = \varepsilon_t = 0.00891 > 0.005$, therefore, $\phi = 0.9$

(17) No. 7 top: $\varepsilon_s = 0.003\dfrac{(d_s - c)}{c} = 0.00864 > 0.002$,

Therefore, f_s = lesser of 60.0 or 51.5 ksi; use 51.5 ksi (tension)

(2) No. 5 bottom: $\varepsilon_s = 0.003\dfrac{(d_s - c)}{c} = 0.00184 < 0.002$,

Therefore, f_s = lesser of 29,000×0.00184= 53.4 or 46.7 ksi; use = 46.7 ksi (tension)

The assumed values of stress are valid.

Taking the moment about the plastic center:

ϕM_n = ϕ\{ (0.62×46.7)(5.6875-4.167) + (10.2×51.5)(5.5625-4.167) + (0.62×46.7)(2.3125-4.167) + (0.85×6)(96×1.075)(4.167- 0.5×1.075) \}

= 0.9 (2633.7) = 2370.3 in.-kips

= 197.5 ft-kips > $M_{EXTREME\ EVENT\ II}$ = 195.472 ft-kips/panel OK

Check capacity of section 2-2:

At the inside face of the barrier (section 1-1), the collision effects, M_{base} and T_{base}, are distributed over L_c and (L_c + 2H), respectively. Assume that these effects will spread between sections 1-1 and 2-2 at a 30° angle. Therefore the collision effects at section 2-2 are:

$$M_{base@2\text{-}2} = (M_{base@1\text{-}1} \times L_c) / [L_c + (2 \times \frac{29}{12} \tan 30)]$$

$$= (23.38 \times 13.589) / (13.589 + 2 \times \frac{29}{12} \times \tan 30)$$

= 19.40 ft-kips/ft

Note that the distance between section 1-1 and 2-2 = 29 in.

$$T_{base@2\text{-}2} = R_W / (L_c + 2H + 2 \times 29 \tan 30)$$

$$= 147.03 / [\ 13.589 + (2 \times \frac{42}{12}) + (2 \times \frac{29}{12}) \tan 30\ ]$$

= 6.29 kips/ft

M_{slab} = (8/12 × 0.150) (3.75^2/2) = 0.70 ft-kip/ft

$M_{barrier}$ = 0.42 [(45-5.2)/(12)] = 1.40 ft-kips/ft

M_{ws} = [(2/12) × 0.150] (2.417^2/2) = 0.073 ft-kip/ft

$M_{EXTREME\ EVENT\ II}$ = 1.25DC + 1.5DW + 1.0CT

= 1.25(0.70 + 1.40) + 1.25(0.073) + 1.0(19.40)

= 22.17 ft-kips/ft × 8 = 177.36 ft-kips/panel

$T_{EXTREME\ EVENT\ II}$ = 1.0(6.29) = 6.29 kips/ft = 50.32 kips/panel

At section 2-2, the strands are still not fully developed, but the three layers of reinforcing bars, (2) No. 5 top, (17) No. 7 top and (2) No. 5 bottom, are fully developed. To simplify the calculations, the strands are ignored. Running the flexural analysis similar to section 1-1, the axial and corresponding flexural design capacity of the section are:

ϕT_n = 50.32 kips/panel, and

ϕM_n = 229.3 ft-kips/panel > $M_{EXTREME\ EVENT\ II}$ = 177.36 ft-kips/panel **OK**

D.2.4.2 Case 2: Due Dead and Live Loads

Due to combined dead and live load, the flexural capacity of section 2-2 should be checked. Load effects at section 2-2 are as follows:

M_{slab} = (8/12 × 0.150) (3.75^2/2) = 0.70 ft-kip/ft

$M_{barrier}$ = 0.42 [(45-5.2)/(12)] = 1.40 ft-kips/ft

M_{ws} = [(2/12) (0.150) (2.417^2/2)] = 0.073 ft-kips/ft

Live load effects:

Article 3.6.1.3 of the *LRFD Specifications* states that where primary strips are transverse and their span does not exceed 15.0 ft, the transverse strips should be designed for the wheels of the 32.0 kip axle. Also, the center of the outside 16.0-kip wheel must be positioned 1 ft from the curb face for the design of the deck overhang.

Article 4.6.2.1.3 of the *LRFD Specifications* states that the live load effects should be distributed over a distance, L (in.) = 45.0 + 10.0(X), where X (in.) = distance from the wheel load to the section under consideration = 17 in.

Live load moment, M_{LL+IM} = $(IM)(m)\ (16)(X)\ /\ L$

Where, m = multiple presence factor (one loaded lane)

= 1.20 [*LRFD Specifications*, Table 3.6.1.1.2-1]

IM = dynamic load allowance

= 1.33 [*LRFD Specifications*, Table 3.6.2.1-1]

$$M_{LL+IM} = 1.33 \times 1.2\ \frac{(16)\left(\frac{17}{12}\right)}{\left[45 + (10)\left(\frac{17}{12}\right)\right]\frac{1}{12}} = 7.34 \text{ ft-kips/ft}$$

$M_{STRENGTH\ I}$ = $1.25DC + 1.5DW + 1.75(LL+IM)$

= 1.25(0.70 + 1.40) + 1.5(0.073) + 1.75(7.34)

= 15.58 ft-kips/ft = 124.6 ft-kips/panel

At section 2-2, the pure flexural design capacity (ignoring the strands) is:

ϕM_n = 229.3 ft-kips/panel > $M_{Strength\ I}$ = 124.6 ft-kips/panel **OK**

D.2.5 Design of Longitudinal Reinforcement

Longitudinal post-tensioning is provided for the following reasons:

(1) to put the panel-to-panel joints in compression

(2) to help in distributing the live load in the longitudinal direction

(3) to provide for the shrinkage and temperature reinforcement

Try high-strength, 150 ksi, 1.0 in. diameter, threaded bars. Assume that the effective prestress, f_{pe}, after seating, anchorage, and time dependent losses is 65% of the maximum tensile capacity.

f_{pe} = 0.65(0.785)(150) = 76.5 kips

Article 9.7.5.3 of the *LRFD Specifications* states that a minimum effective stress of 0.25 ksi on concrete should be provided on precast components joined together by longitudinal post-tensioning.

Required effective post-tensioning force = (0.25 ksi)(8 in.)(44×12 in.) = 1056 kips

Required number of post-tensioning bars = 1056/76.5 = 13.8 bars

Use (14) 1.0 in. diameter, 150 ksi bars across the full width of the bridge as follows: 3 bars at 36 in. per girder spacing and one bar per each cantilever at mid distance of the cantilever.

Article 5.10.8 of the *LRFD Specifications* states that the longitudinal post-tensioning reinforcement can be used as shrinkage and temperature reinforcement if it provides a minimum stress of 0.11 ksi on the gross concrete area, which is already satisfied in this example. Articles 5.10.8.2 and 5.10.3.4 of the *LRFD Specifications* state that if maximum spacing of post-tensioning tendons does not exceed 72 in. or four times the slab thickness, 32 in., or 18 in., no additional conventional reinforcement should be provided between the post-tensioning tendons. However, in order to protect the panel from shrinkage cracking before the post-tensioning reinforcement is added, conventional welded wire reinforcement is provided.

Article 5.10.8 of the *LRFD Specifications* states that for bars or welded wire reinforcement, the area of shrinkage reinforcement per foot, A_s , on each face and in each direction, shall satisfy:

$$A_s \geq \frac{1.30bh}{2(b+h)f_y} \qquad \text{[LRFD Eq. 5.10.8-1]}$$

$$0.11 \leq A_s \leq 0.60 \qquad \text{[LRFD Eq. 5.10.8-2]}$$

Where, b = least width of component section (in.)

h = least thickness of component section (in.)

$$A_s = \frac{(1.3)(12)(8)}{(2)(12+8)(60)} = 0.052 \text{ in}^2\text{/ft} < 0.11 \text{ in}^2\text{/ft}$$

Therefore, A_s = 0.11 in*2*/ft

Use two layers of D4.5 at 6 in. (top and bottom layers), therefore, provided shrinkage and temperature reinforcement = $2(0.045\times\frac{12}{6}) = 0.180 \text{ in}^2$

D.2.6 Miscellaneous Design Issues

The previous sections presented detailed design calculations of the proposed system under service conditions, i.e. after the deck panel system is installed, connected with the supporting girders, and opened for traffic. However, during the life span of the precast panels from the time of fabrication to the time of opening the bridge to traffic, there are some other stages where the stresses of the deck panel have to be checked. These stages typically result from the fact that the panel is a pretensioned concrete member. For this type of member, the pretension force is usually released between 18 and 24 hours after casting the concrete. At that age, the concrete does not have its full design strength and the prestressing force is at its maximum value. This stage is typically called "At Transfer" or "At Release." At this stage the critical section is at the girder lines where there are ungrouted shear pockets that reduce the size of the concrete cross section that will resist the applied prestressing force.

After the prestressing force is released, the panel will be lifted and moved to a temporary storage location. The locations of the lifting points on the panel have to be pre-determined by the design engineer in order to make sure that the stresses, due to the weight of the panel combined with the prestressing force, will not cause any damage to the panel.

The design engineer also has to check the stresses in the panel at time of installation on the supporting girders. At this stage, the concrete has reached its full design strength and all the creep and shrinkage deformation has been attained. Also, the prestressing strands have had almost all the relaxation deformation. The loads that should be used at this stage are the panel weight, the prestressing force after all losses, and any construction load. The construction loads can be concentrated loads due to a fork lift that will be used to carry the panels and install them in place or a uniform live load that represents the crew and equipment that are used during installation of the panels. Typically, the construction loads vary in magnitude and nature from one project to another depending on the way the precast panels are installed. Therefore, it is the contractor's responsibility to provide the design engineer with the construction plan, and it is the design engineer's responsibility to check the stresses in the panel to accommodate this plan. The design engineer must state clearly on the plans that the construction plan of the panels must be checked and approved by him/her prior to construction. Check of stresses in the panel for the above discussed stages are given in the next sections.

D.2.6.1 Check of Concrete Stresses at Time of Transferring the Prestressing Force

f'_{ci} = 5.0 ksi

f_{pi} = strand stress after initial elastic shortening losses = 200.373 ksi [See Sect. D.2.1.2]

P_i = (200.373)(8)(0.153) = 245.257 kips

Stress limits for concrete: [LRFD Art. 5.9.4.1]

- Compression: [LRFD Art. 5.9.4.1.1]

  $0.6\ f'_{ci} = 0.6 \times 5.0 = +\ 3.0$ ksi

- Tension: [LRFD Art. 5.9.4.1.2]

  In areas with bonded reinforcement sufficient to resist 120% of the tension force in the cracked concrete computed on the basis of an uncracked section:

  $0.24\sqrt{f'_{ci}} = 0.24\sqrt{5.0} = -0.537$ ksi

Stresses at top or bottom fibers of the slab:

f_t or f_b $= P_i / A = 245.257 / 768 = +\ 0.319$ ksi

Compressive stress limit for concrete: +3.0 ksi **OK**

D.2.6.2 Check of Concrete Stresses During Lifting the Panel from the Prestressing Bed

The following assumptions are used to check the stresses during lifting the panel from the prestressing bed:

1. The time elapsed between releasing the strands and lifting up the panel is very short. Therefore the concrete strength f'_{ci} and strand stress f_{pi} used to check stresses at release will be used at this stage.
2. The panel will be lifted at every girder line.

<u>Check of stresses at mid span section of the exterior span:</u>

f_t $= (P_i / A) + (M_{slab} / S_t)$

$= (245.257 / 768) + (0.768)(8)(12) / (1024)$

$= +\ 0.391$ ksi

Compressive stress limit for concrete: +3.0 ksi **OK**

f_b $= (P_i / A) - (M_{slab} / S_b)$

$= (245.257 / 768) – (0.768)(8)(12) / (1024)$

$= +\ 0.247$ ksi

Compressive stress limit for concrete: +3.0 ksi **OK**

Check of stresses at first interior girder line:

f_t $= (P_i / A) - (M_{slab} / S_t)$

$= (245.257 / 768) – (1.28)(8)(12) / (1024)$

$= + 0.199$ ksi

Compressive stress limit for concrete: +3.0 ksi **OK**

f_b $= (P_i / A) - (M_{slab} / S_b)$

$= (245.257 / 768) + (1.28)(8)(12) / (1024)$

$= + 0.439$ ksi

Compressive stress limit for concrete: +3.0 ksi **OK**

D.3 Details of the Precast Deck Panel System

Details of the precise deck panel system are given in **Figures D.3-1** to **D.3-5**.

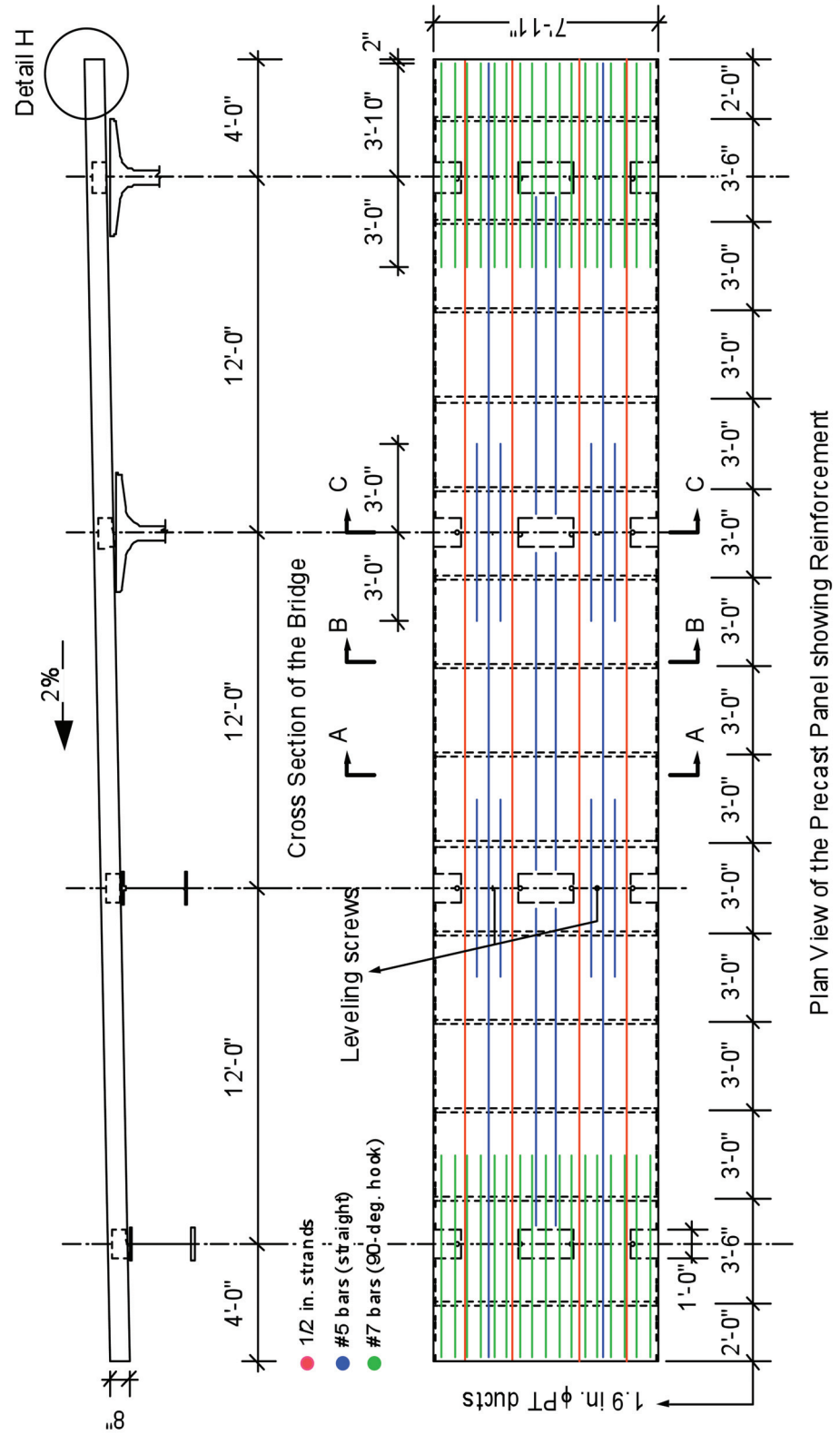

Figure D.3-1. Cross section and plan view of the precast panel.

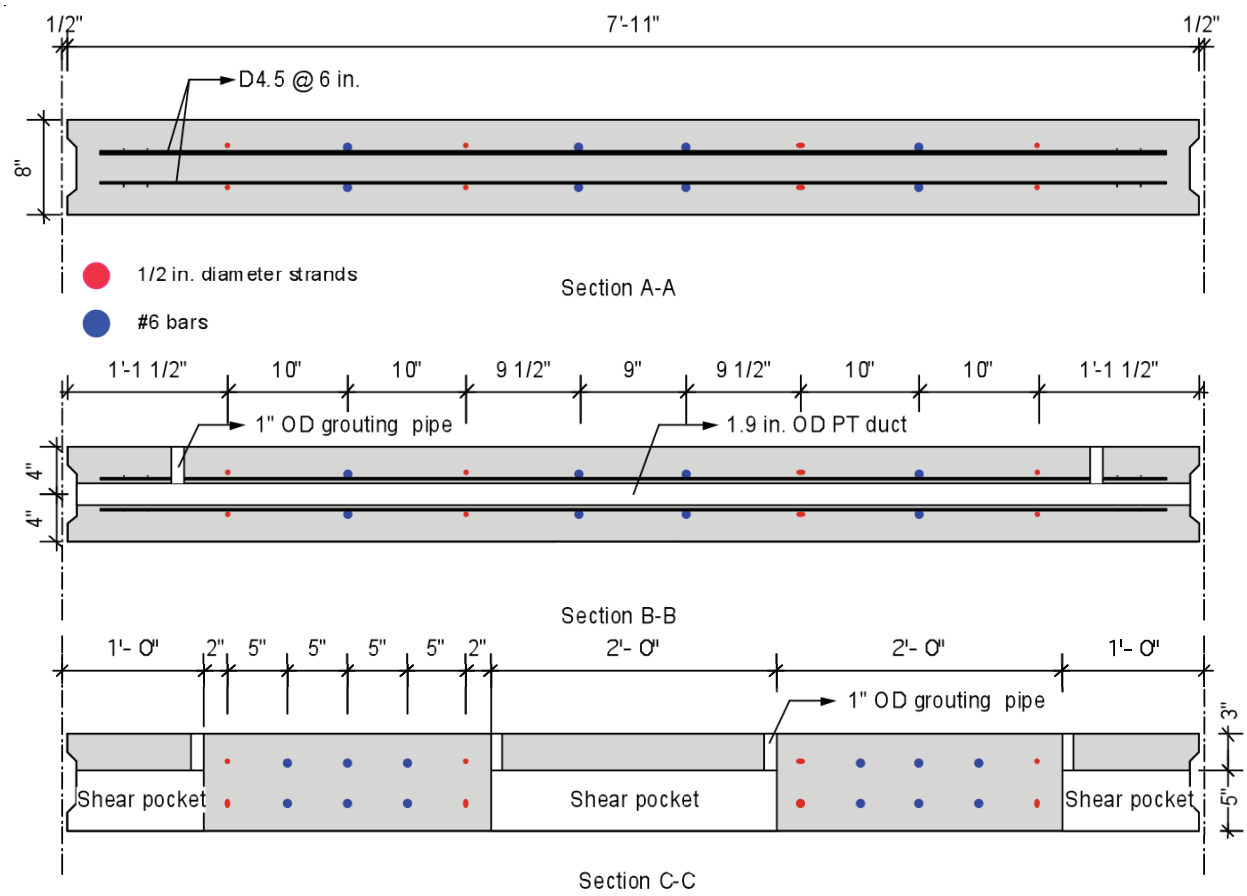

Figure D.3-2. Sections A – A, B – B, and C – C.

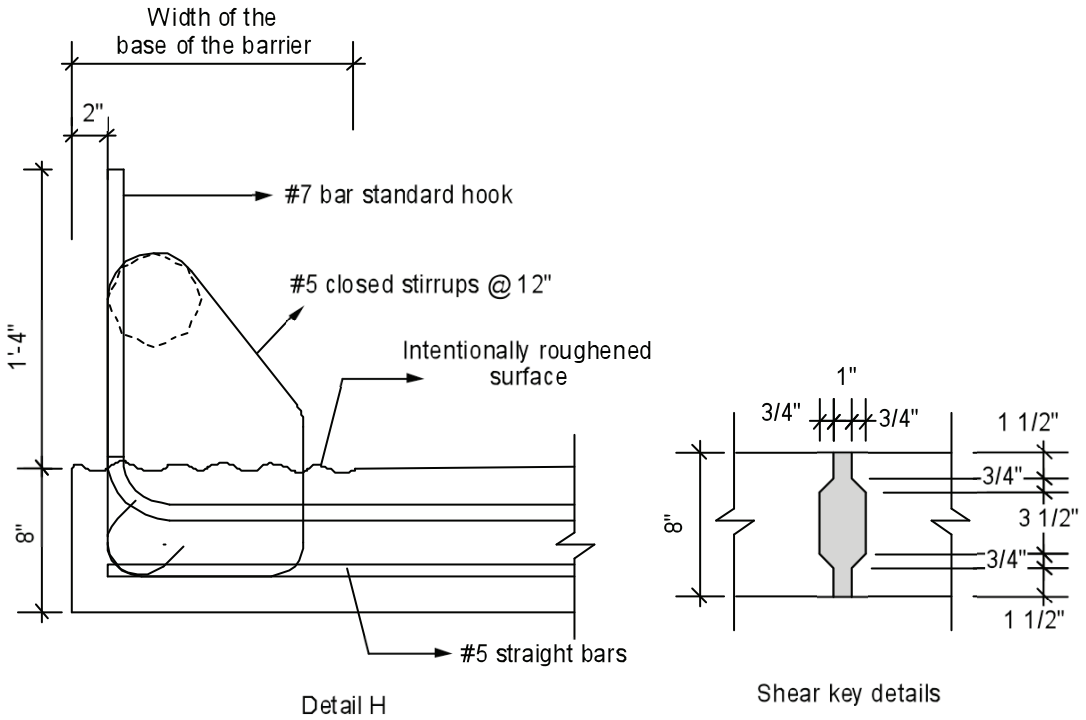

Figure D.3-3. Barrier and shear key details.

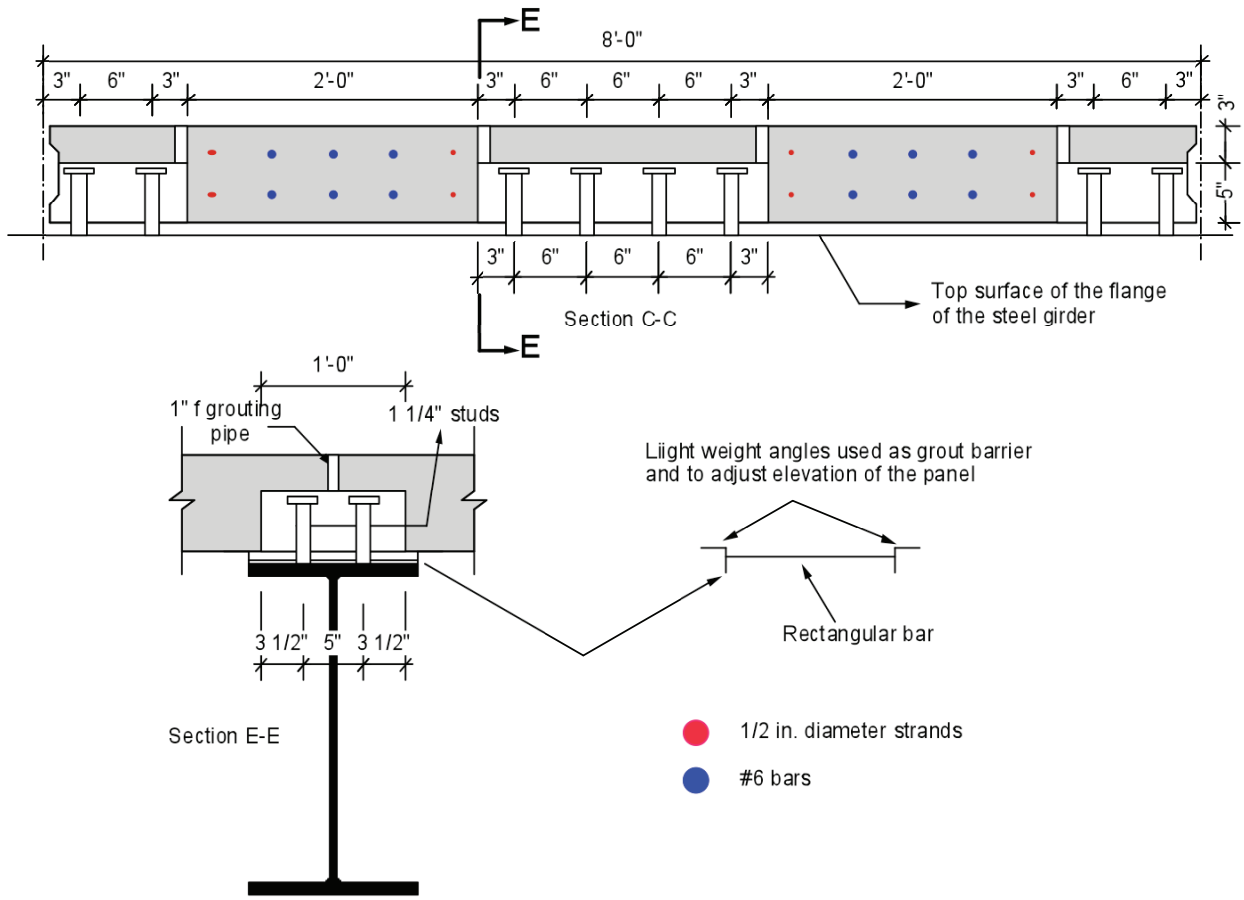

Figure D.3-4. Sections C – C and E – E for steel girders.

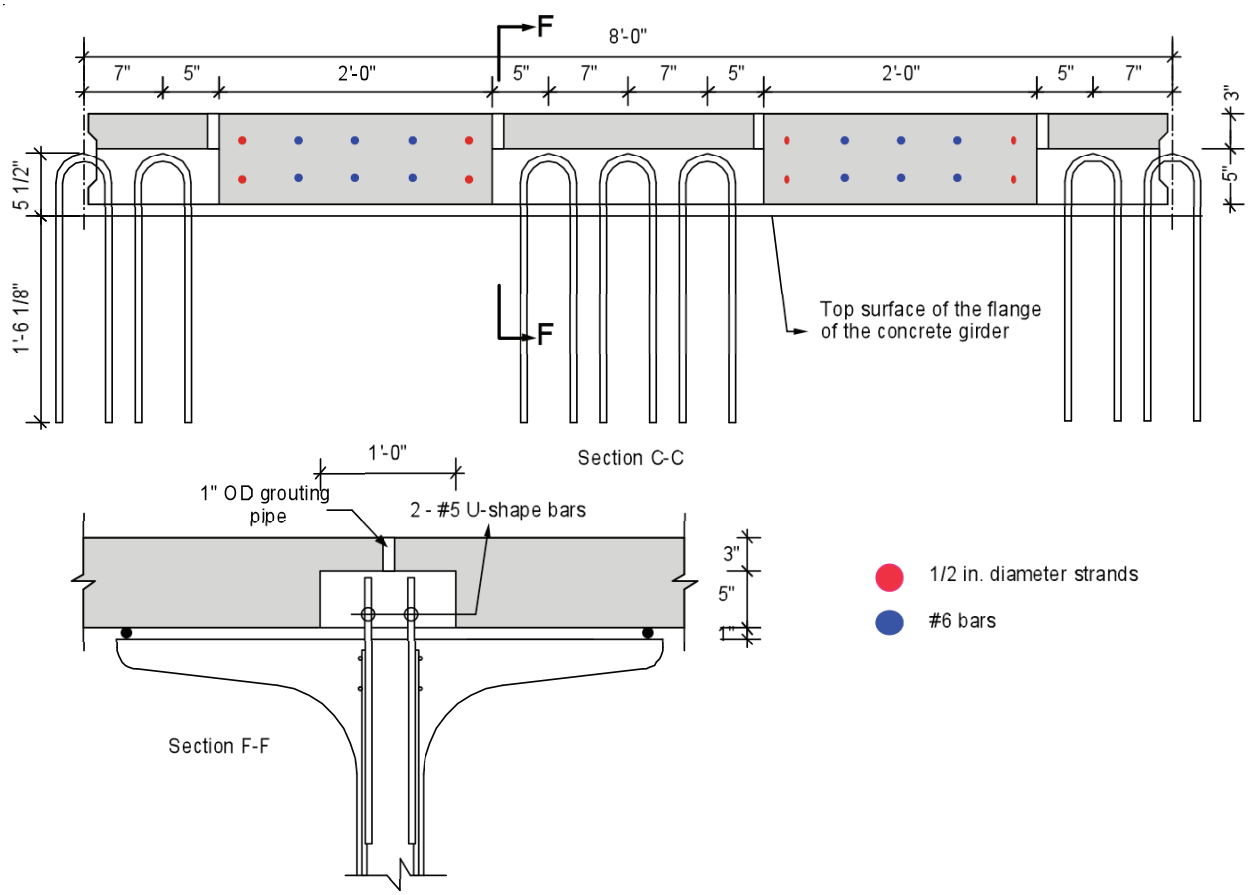

Figure D.3-5. Sections C – C and E – E for precast girder panels.

APPENDIX E – GLOSSARY

Admixture	A material other than water, aggregate, hydraulic cement, and fiber reinforcement, used as an ingredient of concrete or mortar and added to the batch immediately before or during mixing.
Allowable stress	In working stress design, the maximum stress permitted for a specified condition.
Anchorage	In post-tensioning, a mechanical device used to anchor the stressed tendon to the concrete; in pretensioning, a device used to anchor a strand until the concrete has reached a predetermined strength and the prestressing force has been transferred to the concrete.
Bonded tendon	Prestressing tendon that is bonded to concrete either directly or through grouting.
Closure	A placement of cast-in-place concrete used to connect two or more previously-cast portions of a structure.
Composite action	A condition in which two or more elements or components are made to act together by preventing relative movement at their interface.
Confinement	A condition where the disintegration of the concrete under compression is prevented by lateral and/or circumferential reinforcement.
Creep of concrete	Time-dependent deformation of concrete under sustained load.
Deck slab	A solid concrete slab, resisting and distributing wheel loads to the supporting components.
Duct	Hole or void formed in a prestressed concrete member to accommodate a tendon for post-tensioning.
Fly ash	The finely-divided residue resulting from the combustion of ground or powdered coal and which is transported from the firebox through the boiler by flue gases.
Girder	The main longitudinal superstructural element. The term is used primarily for I- and box-section bridges or relatively long-span; used interchangeably with stringer or beam.
Grout	A mixture of cementitious material and water, with or without aggregate, proportioned to produce a consistency without segregation of the constituents. The consistency may range from that required for pouring to that required for dry packing.

Loss of prestress	Reduction in prestressing force resulting from combined effects of strains in concrete and steel, including effects of elastic shortening, creep and shrinkage of concrete, relaxation of steel stress, and for post-tensioned members, friction and anchorage seating.
Low-relaxation strand	Prestressing strand in which the steel relaxation losses have been substantially reduced by stretching at an elevated temperature during manufacture.
Milling	The removal of concrete by a piece of equipment with a rotating drum containing teeth to mill (grind, pulverize).
Overlay	A layer of Portland cement or asphaltic concrete placed on a new or existing bridge deck or roadway and used as a wearing or leveling course or both.
Permeability	The ability of concrete to resist penetration of liquids and gases.
Post-tensioning	A method of prestressing concrete whereby the tendon is kept from bonding to the plastic (wet) concrete, then elongated and anchored directly against the hardened concrete, imparting stresses through end bearing.
Precast members	Concrete elements cast in a location other than their final position.
Precompress	Result of prestressing force applied to a concrete section.
Prestressed concrete	Reinforced concrete in which internal stresses have been introduced to reduce potential tensile stresses in concrete resulting from loads.
Prestressing steel	High strength steel used to prestress concrete and consisting of seven-wire strands, single wires, bars, rods, or groups of wires or strands.
Pretensioning	A method of prestressing concrete whereby the strands are elongated, anchored while the concrete in the member is cast, and released when the concrete is strong enough to receive the forces from the strand through bond.
Shear connector	A mechanical device that prevents relative movements both normal and parallel to an interface.
Shear key	A preformed hollow in the side of a precast component filled with grout or a system of match-cast depressions and protrusions in the face of segments that is intended to provide shear continuity between components.
Shrinkage of concrete	Time-dependent deformation of concrete caused by drying and chemical changes (hydration process).

Skew angle	Smaller angle between the centerline of a support and a line normal to the roadway centerline.
Strand	Seven-wire strand consisting of a straight center wire that is wrapped by six wires in a helical pattern. Strand must conform to ASTM A 416. Strand is typically used in pretensioned precast concrete members.
Substructure	Structural parts of the bridge, which support the horizontal span.
Superstructure	Structural parts of the bridge, which provide the horizontal span.
Tendon	A tensioned element, generally high-strength steel wires, strands, or bars, used to impart prestress to the concrete. In post-tensioned concrete, the complete assembly of prestressing steel, anchorages, and sheathing, when required, is also called a tendon. The term tendon is typically used for post-tensioned concrete members.
Transfer	Act of transferring stress in prestressing tendons from jacks or pretensioning bed to concrete member; immediately after the transfer of prestressing force to the concrete.
Wearing surface	The surface material which is designed to carry the traffic on the pavement structure.

REFERENCES

1. Badie, S.S., Tadros, M.K., and Girgis, A.F., "Full-Depth, Precast-Concrete Bridge Deck Panel System," NCHRP Report 584, National Cooperative Highway Research Program, 2008.
2. Report Number PCINER-02-FDPCDS "Design Guidelines Full Depth Precast Concrete Deck Slabs" issued June 2002 by the New England Region of PCI.
3. Tadros, M. K., and Baishya, M. C., "Rapid Replacement of Bridge Decks," National Cooperative Highway Research Program, NCHRP Report 407, Washington, D.C., 1998.
4. Sprinkel, Michael M., "Precast Concrete Replacement Slabs for Bridge Decks" Virginia Highway and Transportation Research Council , VHTRC 83-R2. Charlottesville, 1982.
5. *AASHTO LRFD Bridge Design Specifications*, American Association of State Highway and Transportation Officials, Washington, D.C., Fourth Edition, 2007 with 2008 Interim Revisions.
6. Stollforf, Dennis W., and Holm, Thomas A., "Bridge Rehabilitation Permits Higher Live Loads," Proceedings of the 4th Materials Engineering Conference, Materials Engineering Division/ASCE, November 10-14, 1996, Washington, D.C.
7. Jenkins, Thomas D., "Redecking and Widening of the Woodrow Wilson Bridge," International Symposium on Lightweight Concrete Bridges, September 10, 1996, sponsored by Caltrans and Pacific Custom Materials, Sacramento, CA, 16 pp.
8. Lutz J. G., Scalia D. J., "Deck Widening and Replacement of Woodrow Wilson Memorial Bridge" *PCI Journal*, V. 29, No. 3, May-June, 1984, pp. 74-93.
9. Castrodale, R.W., and Harmon, K.S., "Design of Prestressed Concrete Bridge Members Using Lightweight Concrete," Paper 55, *Proceedings, 2005 National Bridge Conference*, Palm Springs, CA, PCI, October 16-19, 2005.
10. Vaysburd, Alexander M., "Durability of Lightweight Concrete Bridges in Severe Environments," *Concrete International*, V. 18, No. 7, July 1996, pp. 33-38.
11. Issa, M.A., Yousif, A.A., Issa, M.A., Kaspar, I.I., and Khayyat, S.Y., "Field Performance of Full Depth Precast Panels in Bridge Deck Reconstruction," *PCI Journal*, Vol. 40, No. 3, May-June 1995d, pp. 82-108.
12. Guide Specification for High Performance Concrete for Bridges. Michael A. Caldarone, Peter C. Taylor, Rachel J. Detwiler, and Shrinivas B. Bhide. EB233, Portland Cement Association. Skokie, IL, 2005.
13. Badie, S. S., Baishya, M. C, and Tadros, M. K., "Innovative Bridge Panel System A Success," *Concrete International (CI)*, American Concrete Institute (ACI), V. 21, No. 6, June 1999, pp. 51-54.
14. Markowski, S. M., F. G. Ehmke, M. G. Oliva, J. W. Carter III, L. C. Bank, J. S. Russell, S. Woods, and R. Becker. Full-Depth, Precast, Prestressed Bridge Deck Panel System for Bridge Construction in Wisconsin. In Proceedings of the PCI/National Bridge Conference, Palm Springs, Calif., 2005.

15. Issa, M. A., Salas, J. S., Shabila, H. I., and Alrousan, R.Z. "Composite Behavior of Full-Depth Precast Slabs Installed on Precast Prestressed Girders," Accepted for publication in the PCI Journal, 2006.

16. Issa, M.A., Yousif, A.A., and Issa, M.A., "Structural Behavior of Full Depth Precast Prestressed Concrete Bridge Deck Replacement," Final Report, Illinois Department of Transportation, October 1995c.

17. Biswas, M., "Precast Bridge Deck Design Systems," *PCI Journal*, V. 31, No. 2, March-April 1986, pp. 40-94.

18. Fallaha, S., C. Sun, M. D. Lafferty, and M. K. Tadros. High Performance Precast Concrete NUDECK Panel System for Nebraska's Skyline Bridge. PCI Journal, Vol. 49, No. 5, Sept.-Oct. 2004, pp. 40–50.

19. Donnaruma, Robert C. "A Review of the Department of System for Precast Deck Replacement for Composite I-Beam Bridges," Report to the Research Committee, International Bridge, Tunnel & Turnpike Association, Chicago, Illinois, August, 1974.

20. Issa, Mohsen A., "Experimental Evaluation of Full Depth Precast/Prestressed Concrete Bridge Deck Panels," Project IB-H1, FY 98, Final Report, Illinois Transportation Research Center/Illinois Department of Transportation, February 2002, 246 pp.

21. Menkulasi, F. and Roberts-Wollmann, C.L., "Behavior of Horizontal Shear Connections for Full-Depth Precast Concrete Bridge Decks on Prestressed I-Girders," PCI Journal, V. 50, No. 3., May/June 2005, pp. 60-73.

22. Nottingham, D., "Joint Grouting in Alaska Bridges and Dock Decks," *Concrete International*, V. 18, No. 2, February 1996, pp. 45-48.

23. Issa, M.A., Yousif, A.A., Issa, M.A., Kaspar, I.I., and Khayyat, S.Y., "Analysis of Full Depth Precast Concrete Bridge Deck Panels," *PCI Journal*, Vol. 43, No. 1, January-February 1998, pp. 74-85.

24. Issa, M.A., Shabila, H., Alhassan, M., Evaluation and Recommendation of Overlay Materials for the New Mississippi River Bridge, Final Report, submitted to Modjeski and Masters, Inc, June 2004.

25. Kropp, P. K., Milinski, E. L., Gulzwiller, M. J., Lee, R. B., "Use Of Precast Prestressed Concrete For Bridge Decks" Joint Highway Research Project conducted by Engineering Experiment Station, Purdue University, in cooperation with the Indiana State Highway Commission and the Federal Highway Administration. Final Report, July, 1975, revised December, 1976.

26. "Guide Specifications for Polymer Concrete Bridge Deck Overlays," American Association of State Highway and Transportation Officials, Washington D. C. 1995.

27. Issa, Mohsen A., Patton, Thomas, Abdalla, Hiba, Yousif, Alfred, and Issa, Mahmoud A., "Composite Behavior of Shear Connections in Full-Depth Precast Concrete Bridge Deck Panels on Steel Stringers," *PCI Journal*, September/October 2003, vol. 48, no. 5, pp. 76-89.

28. Babaei, K., Fouladgar, A., and Nicholson, R., "Nighttime Bridge Deck Replacement with Full Depth Precast Concrete Panels at Route 7 over Route 50, Fairfax County, Virginia," Transportation Research Board, 80th Annual Meeting, January 7-11, 2001, Paper #01-0196, Washington, D.C.

29. PCI Committee on Bridges, "Precast Prestressed Concrete Bridge Deck Panels," *PCI Journal*, V. 32, No. 2, March-April 1987, pp. 26-45.

30. "Tolerances for Precast and Prestressed Concrete Construction," MNL-135-00, Precast/Prestressed Concrete Institute

31. Abendroth, R.E., "Nominal Strength of Composite Prestressed Concrete Bridge Deck Panels," *Journal of Structural Engineering, ASCE*, Vol. 121, No. 2, February 1995, pp. 307-318.

32. Slavis, C., "Precast Concrete Deck Reconstruction," *PCI Journal*, V. 28, No. 4., July-August 1983, pp. 120-135.

33. Sylva, G.S., Breen, J. E., and Burns, N.H., "Feasibility of Utilizing High-Performance Lightweight Concrete in Pretensioned Bridge Girders and Panels," Research Report 1852-2, Center for Transportation Research, The University of Texas at Austin, January 2002, 74 pp.

34. Holm, T.A., and Ries, J.P., "Benefits of Lightweight HPC," *HPC Bridge Views*, Federal Highway Administration/National Concrete Bridge Council, Issue No. 17, September/October 2001, p.3

35. Sprinkel , Michael M. "Deck Protection Systems for Bridges Constructed with Precast Concrete Deck Slabs" Proceedings PCI National Bridge Conference, Atlanta Georgia, October 17 – 20, 2004.

36. Ozyildirim, Celik, "Permeability Specifications for High-Performance Concrete Decks" Transportation Research Record 1610, Transportation Research Board, Washington D. C. 1998.

37. Py, Wioleta A., Weyers, Richard E., Weyers, Ryan N., Mokarem, David W., Zemajtis, Jerzy, Sprinkel, Michael M., Dillard, John G., "Field Performance of Epoxy Coated Reinforcing Steel in Virginia Bridge Decks," VTRC 00-R16, Virginia Transportation Research Council, Charlottesville, Virginia, 2000.

38. Standard Specification for Latex-Modified Concrete (LMC) Overlays (ACI 548.4-93), *ACI Manual of Concrete Practice*, Part 6, Farmington Hills, MI. 2003.

39. FHWA/RD-85/045, "Criteria for Designing Lightweight Concrete Bridges," T.Y. Lin International, August 1985, pp. 153.

40. Sprinkel, Michael M., "Very-Early-Strength Latex-Modified Concrete Overlay," Transportation Research Record, Transportation Research Board, Washington, D.C., 1999.

41. Prefabricated Bridge Elements and Systems in Japan and Europe, March 2005, Report No. FHWA-PL-05-003, U.S. Department of Transportation, Federal Highway Administration, Washington DC.

42. NCHRP Report 381—report on the 1995 Scanning Review of European Bridge Structures. NCHRP Report 381, Transportation Research Board, National Research Council, National Academy Press

43. 2TV-BEL-B; *Additional Technical Contract Conditions and Guidelines for Production of Concrete Bridge Decks*, Federal Department of Transportation, Construction, and Housing. Washington, DC.

44. 2TV-BEL-ST; *Additional Technical Contract Conditions and Guidelines for Production of Steel Bridge Decks*, Federal Department of Transportation, Construction, and Housing. Washington, DC.

45. Source: *Engineering News-Record* magazine article "A Quick Switch in the Dark," September 1, 1983.

46. Perry, A., Fraser, R., and Macdonald, J. H. Seal Island Bridge Deck Replacement Concrete International, Vol. 21, No. 6, May 2004. pp. 53–57.

47. Badie, S.S.; Baishya, M.C, and Tadros, M.K. "NUDECK- An Efficient and Economical Precast Bridge Deck System," *Prestressed/Precast Concrete Institute (PCI) Journal*, September-October, Vol. 43, No. 5, 1998, pp. 56-74.

48. Badie, S. S., Tadros, M. K., Kakish, H. F., Splittgerber, D. L., and Baishya, M. C, "Large Studs for Composite Action in Steel Bridge Girders," American Society of Civil Engineering (ASCE), *Bridge Journal*, Vol. 7, No. 3, May/June 2002, pp. 195-203.

49. *PCI-Bridge Design Manual* (PCI-BDM), Preact/Prestressed Concrete Institute, Chicago, IL, 1997.

50. Badie, S.S., Girgis, A.F., Tadros, M.K., and Sriboonma, K., "Full-Scale Testing for Composite Slab/Beam Systems made with Extended Stud Spacing," ASCE Bridge Journal, American Society of Civil Engineering (accepted for publication in 2011).

51. Badie, S.S., Girgis, A.F., Tadros, M.K., and Nguyen, N.T., "Relaxing the stud spacing limit for Full-depth Precast Concrete Deck Panels Supported on Steel Girders," ASCE Bridge Journal, American Society of Civil Engineering, Vol. 15, No. 5, September 1, 2010.

52. NHI Course No 13061, "Load and Resistance Factor Design of Highway Bridges," National Highway Institute, Federal Highway Administration, Publication No FHWA HI-95

The following are additional, useful references that are not cited in the text.

- *AASHTO LRFD Bridge Design Specifications*, (1994), American Association of State Highway and Transportation Officials, Washington, D.C., First Edition, with Interim 1996.
- *AASHTO Standard Specifications for Highway Bridges*, (2002). Washington, D.C., 17th edition. American Association of State Highway and Transportation Officials
- ACI Committee 211, "Standard Practice for Selecting Proportions for Structural Lightweight Concrete (ACI 211.2-98)," American Concrete Institute, Farmington Hills, MI, 1998.
- ACI Committee 213, "Guide for Structural Lightweight-Aggregate Concrete (ACI 213R-03)," American Concrete Institute, Farmington Hills, MI, 2003, 38 pp.
- ACI Committee 318, "Building Code Requirements for Structural Concrete (ACI 318-03) and Commentary (ACI 318R-03)," American Concrete Institute, Farmington Hills, MI, 2003.
- ACI Committee 363, "State-of-the-Art Report on High-Strength Concrete (ACI 353R-92)," American Concrete Institute, Farmington Hills, MI, 1992 (Reapproved 1997), 55 pp.
- Anderson, A. R., "Systems Concepts for Precast and Prestressed Concrete Bridge Construction," *Special Report 132*, System Building for Bridges, Highway Research Board, Washington, D.C., 1972, pp. 9-21.

- Badie, S.S.; Baishya, M.C, and Tadros, M.K. "NUDECK- An Efficient and Economical Precast Bridge Deck System," *Prestressed/Precast Concrete Institute (PCI) Journal*, September-October, Vol. 43, No. 5, 1998, pp. 56-74.
- Bremner, T.W., and Holm, T.A., "Elastic Compatibility and the Behavior of Concrete," *ACI Journal*, V. 83, No. 2, March-April 1986, pp. 244-250.
- Brown, W. R., Larsen, T. J., and Holm, T. A., "Long-Term Service Performance of Lightweight Concrete Bridge Structures," International Symposium on Structural Lightweight Aggregate Concrete, Sandefjord, Norway, June 1995.
- Caroland, William B., Depp, David, Janssen, H. Hubert, and Spaans, Leo, "Spliced Segmental Prestressed Concrete I-Beams for Shelby Creek Bridge," *PCI Journal*, V. 37, No. 5, September-October 1992, pp. 22-33.
- Culmo, M.P., "Bridge Deck Rehabilitation Using Precast Concrete Slabs," Paper Number IBC-91-55, Eighth Annual International Bridge Conference, Pittsburgh, Pennsylvania, June 10-12, 1991.
- Devalapura, Ravi K and Tadros, M. K. "Stress-Strain Modeling of 270-ksi Low-Relaxation Prestressing Strands," *PCI Journal*, May/April 1992, pp. 100-106.
- Donnaruma, Robert C. "Performance of Precast Concrete Bridge Deck Panels on the New York Thruway," Report presented at Session 187, 62nd Annual Meeting, Transportation Research Board, Washington D.C., January 1983.
- Expanded Shale, Clay and Slate Institute (ESCSI), "Building Bridges and Marine Structures with Structural Lightweight Concrete," Information Sheet # 4700.3, Salt Lake City, UT, February 2001, 14 pp.
- Expanded Shale, Clay and Slate Institute (ESCSI), "Back-up Statistics to Building Bridges and Marine Structures with Structural Lightweight Concrete," Information Sheet # 4700.4, Salt Lake City, UT, February 2001, 26 pp.
- Fagundo, F.E., Tabatabai, H., Soongswang, K., Richardson, J.M., and Callis, E.G., "Precast Panel Composite Bridge Decks," *Concrete International*, V. 7, No. 5, May 1985, pp. 59-65.
- Farago B., Agarwal A. C., Brown J., Bassi K. G. "Precast Concrete Deck Panels for Girder Bridges," Ministry of Transportation Of Ontario, 1992.
- Guide for the Use of Silica Fume in Concrete (ACI 234R-96), *ACI Manual of Concrete Practice*, Part 2, Farmington Hills, MI. 2003.
- Gulyas, R. J., "Precast Bridge Decks: Keyway Grouting Data," *Concrete International*, V. 18, No. 8, August 1996.
- Hoff, G.C., and Elimov, R., "Concrete Production for the Hibernia Platform," Proceedings, 1995 Annual Meeting of the Canadian Society of Civil Engineers, Ottawa, Ontario, 1995.
- Holm, T. A., and Bremner, T. W., "State-of-the-Art Report on High-Strength, High-Durability Structural Low-Density Concrete for Applications in Severe Marine Environments," ERDC/SL TR-00-3, US Army Corps of Engineers,. Engineer Research and Development Center, Structures Laboratory, Vicksburg, MS, August 2000, 103 pp.
- Holm, Thomas A., "Lightweight Concrete and Aggregates," Standard Technical Publication 169C, *ASTM International*, 2001, pp. 522-532.

- Holm, Thomas A., and Ries, John P., "Specified Density Concrete – A Transition," Proceedings, Second International Symposium on Structural Lightweight Aggregate Concrete, " Kristiansand, Norway, June 18-22, 2000.
- Issa, M.A., Idriss, A.T., Kaspar, I.I., and Khayyat, S.Y., "Full Depth Precast and Precast, Prestressed Concrete Bridge Deck Panels," *PCI Journal*, Vol. 40, No. 1, January-February 1995a, pp. 59-80.
- Issa, M.A., Yousif, A.A., and Issa, M.A., "Construction Procedures for Rapid Replacement of Deteriorated Bridge Decks," *Concrete International*, Vol. 17, No. 2, February 1995b, pp. 49-52.
- Issa, M.A., Yousif, A.A., and Issa, M.A., "Experimental Behavior of Full-Depth Precast Concrete Panels for Bridge Rehabilitation," *ACI Structural Journal*, Vol. 97, No. 3, May-June 2000, pp. 397-407.
- Issa, M.A., Ralph Anderson, Thomas Domagalski, and Salah Khayyat, "Design Considerations of Full Depth Precast/Prestressed Concrete Bridge Deck Panels," Proceedings of the 1st annual Concrete Bridge Conference sponsored by FHWA and NCBC, and organized by PCI, October 6-9, 2002, p 20.
- Issa, Mohsen A., do Valle, Cyro, Abdalla, Hiba, Islam, Shahid, and Issa, Mahmoud, "Performance of Transverse Joint Grout Materials in Full-Depth Precast Concrete Bridge Deck Systems," *PCI Journal*, July/August 2003, vol. 48, no. 4, pp. 92-103.
- Issa, Mohssen A., Anderson, Ralph, and Domagalski, Thomas, "Full-Depth, Prefabricated Concrete Bridge Deck Slab System: Design and Specifications," The Second Prefabricated Bridge Elements and Systems Workshop, New Brunswick, New Jersey, Federal Highway Administration, September, 2004.
- Issa, Mohsen A., Anderson, Ralph, Domagalski, Thomas, Asfour, Shaker, and Islam, M.D., "Full-Depth, Precast Post-tensioned Concrete Bridge Deck Slab System: Experimental Evaluation, Observations, and Recommendations," Paper Submitted to ACI Structural Journal.
- Issa, Mohsen A., Anderson, Ralph, Domagalski, Thomas, Asfour, Shaker, and Kahn, L. F., Kurtis, K. E., Lai, J. S., Meyer, K. F., Lopez, M, and Buchberg, B., "Lightweight Concrete for High Strength/High Performance Precast Prestressed Bridge Girders," Final Report, Georgia Department of Transportation, Project No. 2004, Georgia Institute of Technology, Revised November 2004, 155 pp.
- Krauss, Paul D., and Rogalla, Ernest A., "Transverse Cracking in Newly Constructed Bridge Decks," NCHRP Report 380, Transportation Research Board, Washington, D.C., 1996, 126 pp.
- Mainstone, R.J. and Menzies, J.B., "Shear Connectors in Steel-Concrete Composite Beams for Bridges," Part 1: Static and Fatigue Tests on Push-Out Specimens. Concrete. Vol. 1, No 9, September 1967.
- Matorras, Juan Luis, "High Strength Lightweight Concrete for Prestressed Composite Bridge Girders," Masters Thesis, North Carolina State University, 1995, pp. 73.
- Meyer, K. F. and Kahn, L. F., "Analytical Investigation of Lightweight Concrete for High Strength/High Performance Precast Prestressed Bridge Girders," Task 1 Report, Georgia

Department of Transportation, Project No. 2004, Georgia Institute of Technology, January 2000, 27 pp.

- Meyer, K. F., and Kahn, L. F., "Lightweight Concrete Reduces Weight and Increases Span Length of Pretensioned Concrete Bridge Girders," *PCI Journal,* V. 47 No.1, 2002, p. 68-75.
- National Highway Institute (NHI), FHWA NI-95-017, "Load and Resistance Factor Design for Highway Bridges," NHI Course No. 13061, 1995.
- Nebraska Department of Roads Design Manual and Policies (NDOR POP), 2004.
- Ozyildirim, C., Cousins, T., and Gomez, J., "First Use of Lightweight High-Performance Concrete Beams in Virginia," ACI SP-218, American Concrete Institute, Detroit, 2004, pp. 1-8.
- Rabbat, B.G. and Hanson, N.W, "Fatigue Tests of Bolted Connections Designed by Shear Friction," *Research and Development Bulletin,* RD064.01E, 1979.
- Slavis. C. "Precast Concrete Deck Modules for Bridge Deck Reconstruction" Transportation Research record 871, Segmental and System Bridge Construction; Concrete Box Girder and Steel Design, Transportation Research Board, Washington, D.C., 1982. pp. 30-33.
- Standard Practice for the Use of Shrinkage-Compensating Concrete (ACI 223-98), *ACI Manual of Concrete Practice*, Part 1, Farmington Hills, MI. 2003.
- *Standard Specifications for Highway Bridges*, 17th Edition, American Association of State Highway and Transportation Officials, Washington, D. C., 2002.
- Tadros, M.K., Badie, S.S., and Kamel, M.R., "A New Connection Method for Rapid Removal of Bridge Decks," *PCI Journal*, May-June 2002, Vol. 47, No. 3, pp. 2-12.
- Togashi M., Ota T., Hiyama Y., Furumura T., Konishi T., "Application of Precast Slab and Sidewall to Construction of Bridge" *Journal of Prestressed Concrete*, *Japan*, Japan Prestressed Concrete Engineering Association, V. 35, No. 1, Jan.-Feb., 1993, pp. 22-32.
- Walum, R., Weng, J.K., Hoff, G.C., and Nunez, R.A., "The Use of High-Strength Modified Normal Density Concrete in Offshore Structures," Proceedings, International Conference on Concrete Under Severe Conditions, Sapporo, Japan, 1995, 10 pp.
- Transportation Research Circular Number E-C059, ―Accelerated Highway Construction – Workshop Series Summary, Transportation Research Board of the National Academies, December 2003.

PCI™ Precast/Prestressed Concrete Institute
200 West Adams Street | Suite 2100 | Chicago, IL 60606-5230
Phone: 312-786-0300 | Fax: 312-621-1114 | www.pci.org

A production of PCI Publications Department