STATE	PROJECT DESIGNATION	YEAR	SHEET NO.	TOTAL SHEETS
ALASKA	NFHWY00366	2019	N1	N17

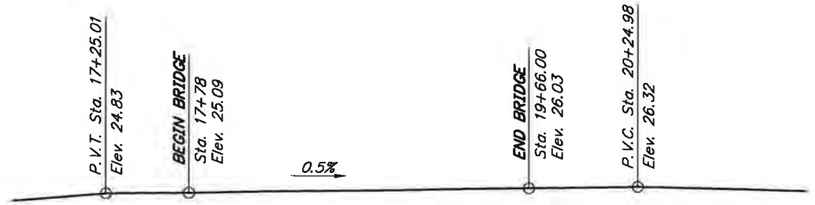

PROFILE GRADE DATA
No Scale

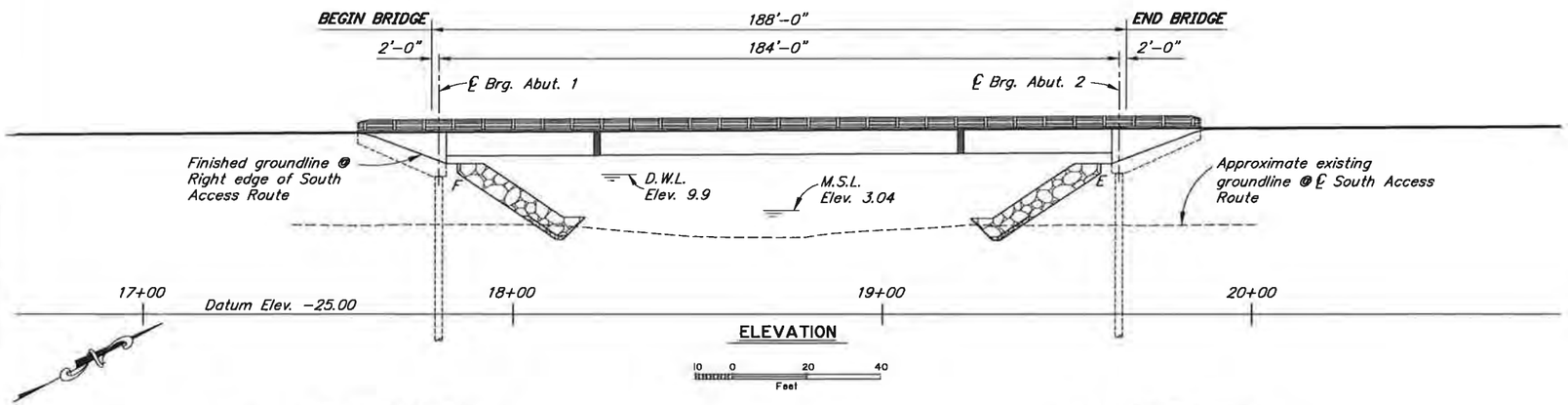

ELEVATION

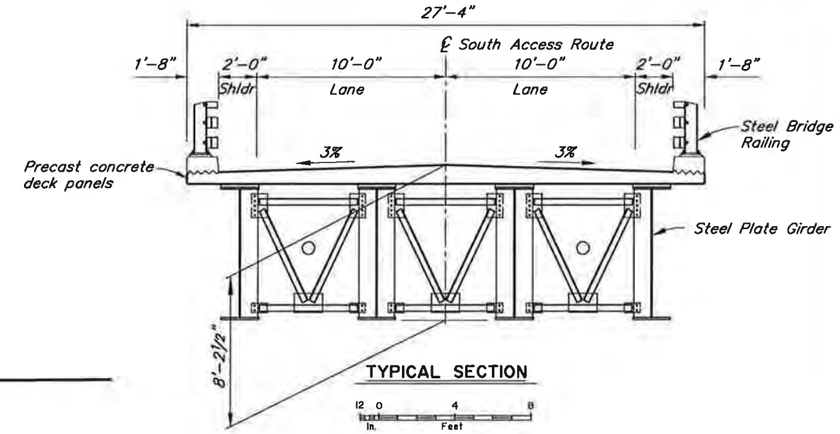

TYPICAL SECTION

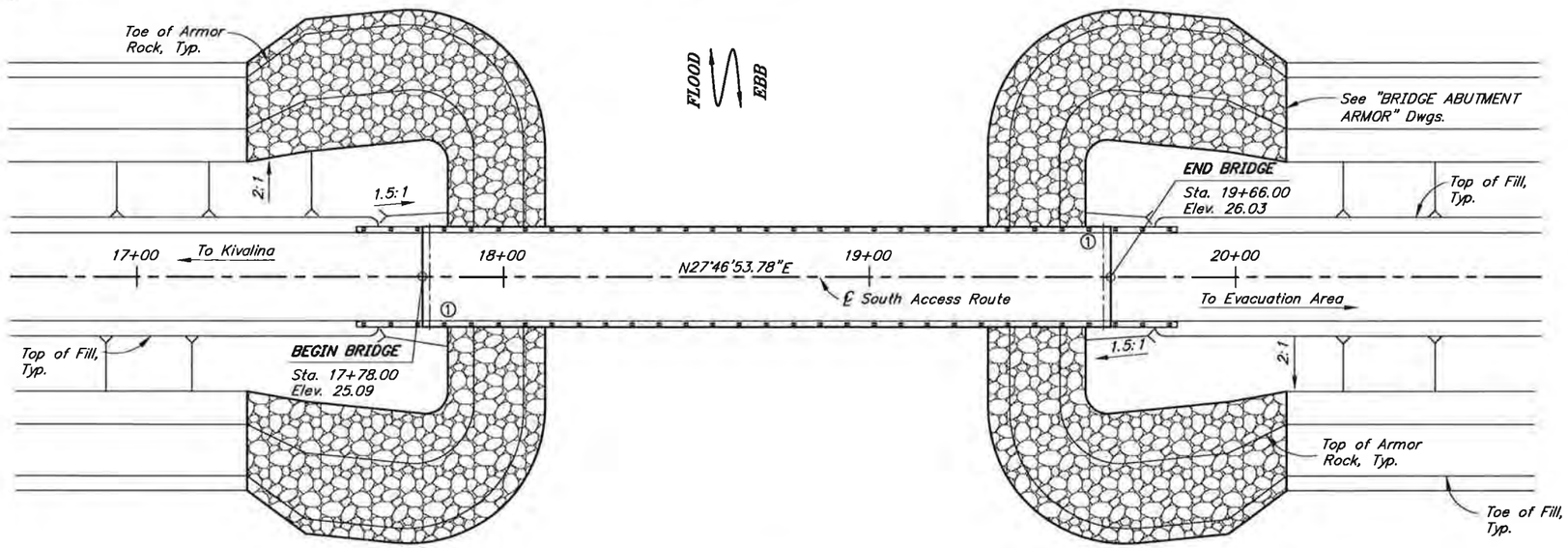

PLAN

BRIDGE DRAWING INDEX

TITLE	DWG. NO.
GENERAL LAYOUT	1
SITE PLAN	2
ABUTMENTS	3
ABUTMENT DETAILS	4
WINGWALLS	5
TYPICAL SECTION AND FRAMING PLAN	6
GIRDERS	7
GIRDER DETAILS	8
OPTIONAL BOLTED SPLICE DETAILS	9
CAMBER DIAGRAM	10
DECK PANELS	11
STEEL BRIDGE RAILING	12
LOG OF TEST HOLE BORINGS	13-17

NOTES

① Approximate location of Bridge Number Plate.

DESIGNED BY: Elmer Marx	CHECKED: Ben Fetterhoff	LAYOUT BY: Elmer Marx	CHECKED BY: Ben Fetterhoff
DRAWN BY: Sam Sollie	CHECKED: Elmer Marx	SPECIFICATIONS BY: Elmer Marx	P S & E COMPARED: Ben Fetterhoff
QUANTITIES BY: Elmer Marx	CHECKED: Ben Fetterhoff	APPROVAL RECOMMENDED BY: Rich Pratt	

STATE OF ALASKA
DEPARTMENT OF TRANSPORTATION AND PUBLIC FACILITIES
BRIDGE SECTION
3132 Channel Drive
Juneau, Alaska 99801
907-465-2975

STATE OF ALASKA 49TH Elmer E. Marx III 08-28-2019 SE# 13260 REGISTERED STRUCTURAL ENGINEER

KIVALINA LAGOON BRIDGE
SOUTH ACCESS ROUTE
GENERAL LAYOUT

BRIDGE NO. 2344
DWG. NO. 1

R:\evault\2344\cad\2019 Signed\2344-GENERAL LAYOUT Wed, Aug/28/19 07:48am

STATE	PROJECT DESIGNATION	YEAR	SHEET NO.	TOTAL SHEETS
ALASKA	NFHWY00366	2019	N2	N17

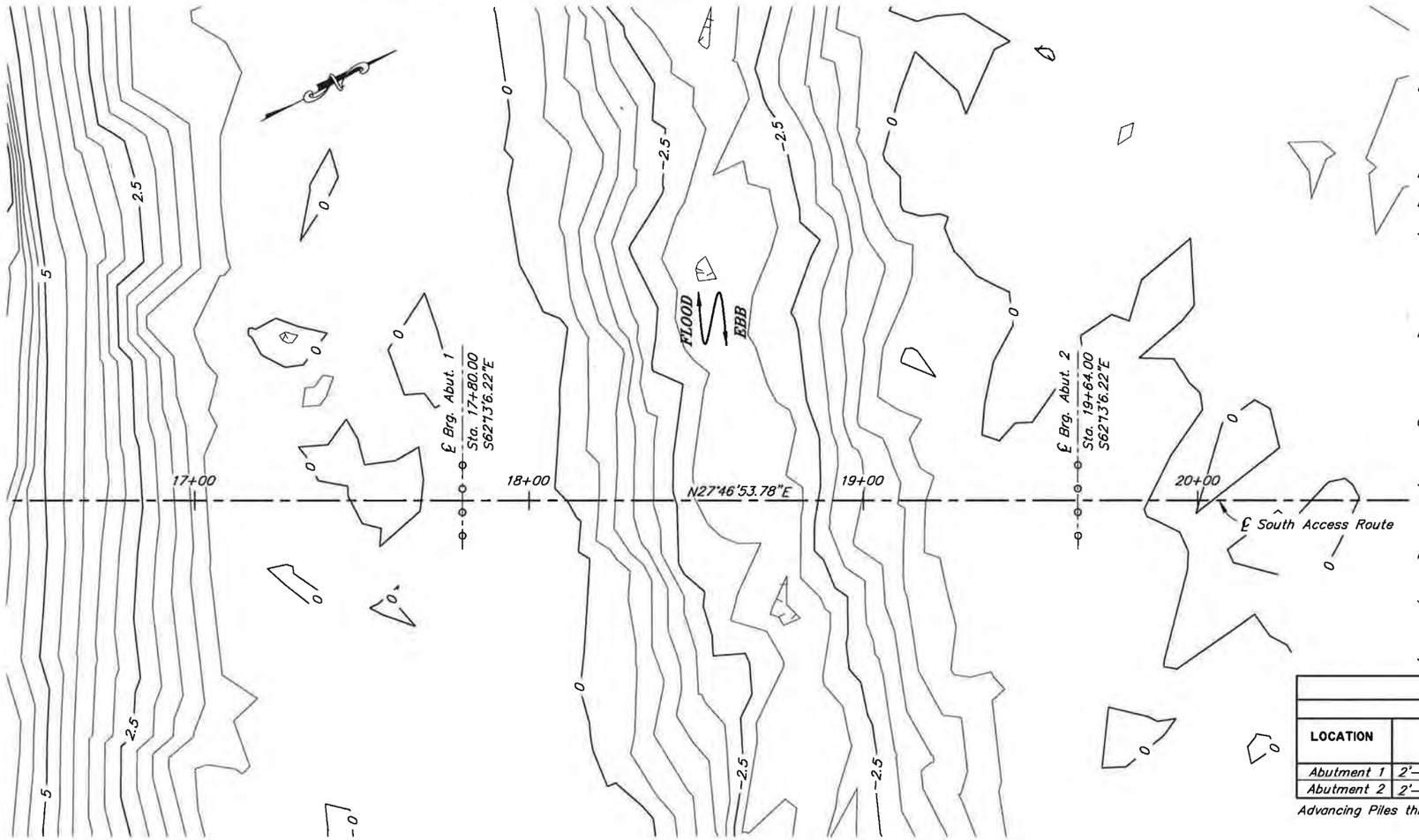

PLAN

10 0 20 40
Feet

GENERAL NOTES

DESIGN:..... AASHTO LRFD Bridge Design Specifications, 2017 Edition, with latest interim specifications.

Seismic design per AASHTO Guide Specifications for LRFD Seismic Bridge Design, 2011 with latest interim revisions.

LIVE LOAD:..... HL-93

DEAD LOAD:..... Includes 50 psf for all wearing surfaces.

SEISMIC PARAMETERS:..... PGA = 0.12
Ss = 0.27
S1 = 0.08
Site Class = D
Liquefaction Potential = Low
AASHTO 7% probability of exceedance in 75 years.

REINFORCEMENT:..... ASTM A706, Grade 60, Fy = 60,000 psi
ASTM A970 Headed bars, Class HA.
Space reinforcement evenly unless otherwise noted.
Galvanized reinforcing bars may be substituted for epoxy-coated bars.

CONCRETE:..... Class A Concrete unless otherwise noted, f'c = 4000 psi
Class P Concrete for precast deck panels, f'c = 5,000 psi.
Provide rubbed finish on all exposed vertical surfaces.

STRUCTURAL STEEL:..... ASTM A709, Grade 50T3, Fy = 50,000 psi
Galvanize structural steel in accordance with AASHTO M111 or SSPC CS23.00 unless shown otherwise.
All steel is main members subject to tension.

HIGH STRENGTH BOLTS:..... Galvanized ASTM F3125 Grade A325 or F1852, Fu = 120,000 psi.
Exclude threads from shear plane. Do not use punched holes.

STRUCTURAL STEEL PILING:..... API 5L X52 PSL2, Fy = 52,000 psi.
or ASTM A709 Grade, 50T3, Fy = 50,000 psi.
Close-ended pile tip reinforcing is required.

SHEAR STUD CONNECTORS:..... ASTM A108, Fu = 60,000 psi

PILE DATA TABLE

LOCATION	PILE TYPE	DRIVING CRITERIA: MINIMUM PENETRATION (ft)	DRIVING CRITERIA: ESTIMATED PILE TIP ELEVATION (ft)	DRIVING CRITERIA: DRIVING RESISTANCE (K)	DESIGN DATA: STRENGTH I FACTORED LOAD (K)	DESIGN DATA: NOMINAL RESISTANCE (K)	DESIGN DATA: RESISTANCE FACTOR, ϕ
Abutment 1	2'-0"øx1/2" Pipe	80	-67	1060	475	1060	0.45
Abutment 2	2'-0"øx1/2" Pipe	80	-67	1060	475	1060	0.45

Advancing Piles through frozen soils is required.

ESTIMATE OF QUANTITIES

ITEM NO.	ITEM	PAY UNIT	ESTIMATING UNIT	SUBST.	SUPERST.	TOTAL QUANTITY
205.0006.0000	Structural Fill	CY	CY	1,085	---	1,085
501.0001.0000	Class A Concrete	LS	CY	102.7	65.8	168.5
501.0007.0000	Precast Concrete Member, Deck Panel	EA	EA	---	37	37
503.0001.0000	Reinforcing Steel	LS	LBS	20,660	---	20,660
503.0002.0000	Epoxy-Coated Reinforcing Steel	LS	LBS	---	2,655	2,655
504.0001.0000	Structural Steel	LS	LBS	---	386,200	386,200
505.0005.2405	Furnish Structural Steel Piles, 2'-0" Dia. Pipe	LF	LF	639.2	---	639.2
505.0006.2405	Drive Structural Steel Piles, 2'-0" Dia. Pipe	EA	EA	8	---	8
507.0001.0003	Steel Bridge Railing, 3-Tube	LF	LF	---	476.0	476.0

Item numbers are for reference only. Quantities shown are not necessarily the pay quantities nor the total quantity of the particular item.

ABBREVIATIONS:

℄	= centerline	dia.	= diameter	M.S.L.	= mean sea level
ℙ	= plate	Dwg.	= drawing	n.f.	= near face
&	= and	E	= expansion	No.	= number
@	= at	(E)	= existing	o.c.	= on center
ø	= diameter	EA	= each	O.H.W.	= ordinary high water
±	= approximate	Elev.	= elevation	pcf	= pounds per cubic foot
AASHTO	= American Association of State Highway and Transportation Officials	e.f.	= each face	psf	= pounds per square foot
		e.w.	= each way	psi	= pounds per square inch
		F	= fixed	P.V.C.	= point of vertical curve
ASTM	= American Society for Testing and Materials	f.f.	= front/air face	P.V.I.	= point of vertical intersection
		f'c	= specified concrete compressive strength	P.V.T.	= point of vertical tangent
Abut.	= abutment			R.O.W.	= right of way
Approx.	= approximate	Fy	= yield stress	RT	= radiographic testing
b.f.	= back/dirt face	Glav.	= galvonize	Rt.	= right
bot.	= bottom	H.S.	= high strength	Rd.	= road
Br.	= bridge	Hwy.	= highway	Shldr	= shoulder
btwn.	= between	Jt.	= joint	spc.	= space, spaces
Brg.	= bearings	ksf	= 1000 pounds per square foot	Sta.	= station
cfs	= cubic feet per second	LB	= pound	SF	= square feet
C.I.P.	= cast in place	LF	= linear foot	SY	= square yard
CJP	= complete joint penetration	LS	= lump sum	Symm.	= symmetric
Clr.	= clear, clearance	Lt.	= left	Typ.	= typical
CY	= cubic yard	max.	= maximum	UT	= ultrasonic testing
D.W.L.	= design water level	min.	= minimum	Yr.	= year
				w/	= with

DESIGNED BY: Elmer Marx	CHECKED: Ben Fetterhoff
DRAWN BY: Sam Sollie	CHECKED: Elmer Marx
QUANTITIES BY: Elmer Marx	CHECKED: Ben Fetterhoff

STATE OF ALASKA
DEPARTMENT OF TRANSPORTATION AND PUBLIC FACILITIES
BRIDGE SECTION
3132 Channel Drive
Juneau, Alaska 99801
907-465-2975

STATE OF ALASKA 49TH Elmer E. Marx III 09-26-2019 SE# 13260 REGISTERED STRUCTURAL ENGINEER

KIVALINA LAGOON BRIDGE

SOUTH ACCESS ROUTE

SITE PLAN

BRIDGE NO. 2344
DWG. NO. 2

R:\evault\2344\cad\2019 Signed\2344-SITE PLAN Wed, Aug/28/19 07:48am

STATE	PROJECT DESIGNATION	YEAR	SHEET NO.	TOTAL SHEETS
ALASKA	NFHWY00366	2019	N3	N17

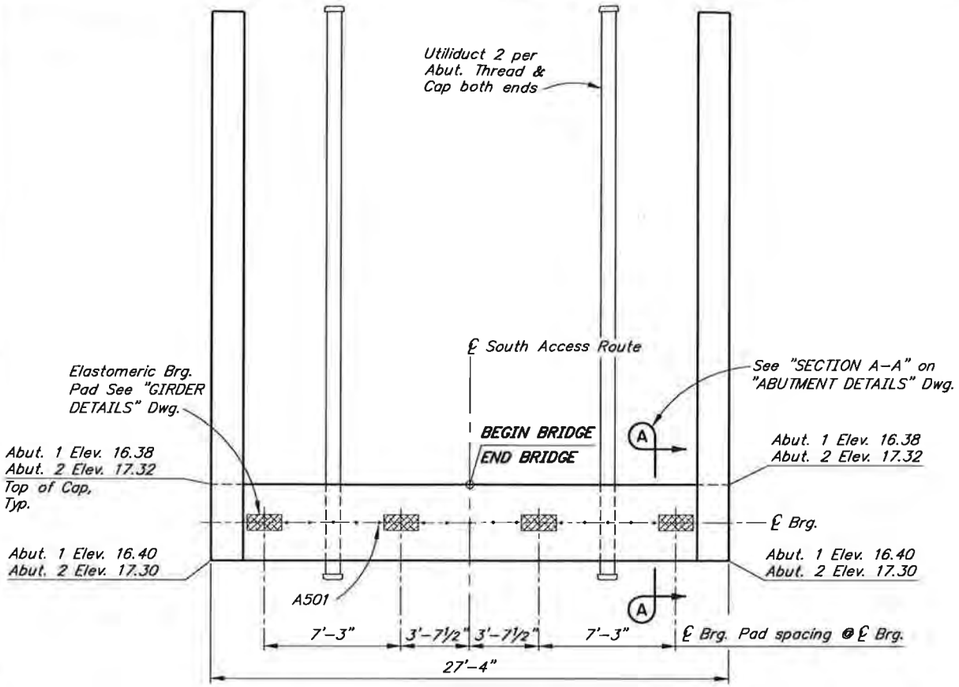

PLAN

REINFORCING STEEL - ONE ABUTMENT

MARK	NOTE	SIZE	NO.	LENGTH	TYPE
A401	S	4	4	216'–0"	SPIRAL
A402		4	82	12'–11"	STIRRUP
A403		4	28	6'–0"	HOOP
A404		4	40	4'–8"	TIE
A501	A	5	15	7'–0"	---
A502	E	5	24	VARIES	STIRRUP
A601		6	10	27'–0"	---
A602	E	6	12	23'–6"	---
A603	E,M	6	7	27'–0"	---
A701	E	7	8	3'–0"	BENT
A801		8	32	30'–0"	---
A1001	H	10	14	27'–0"	HEADED
C403	E	4	8	4'–5"	BENT

BENDING DIAGRAM

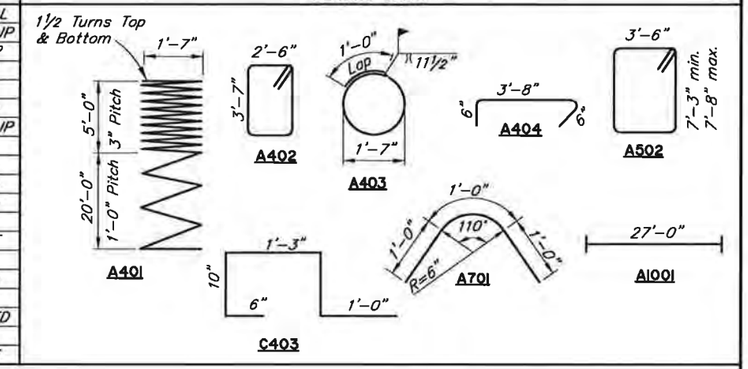

A – Abutment 1 only
E – Epoxy-Coated
H – Headed reinforcing steel
M – Field adjust to match crown
S – Splices permitted. Splice length not included

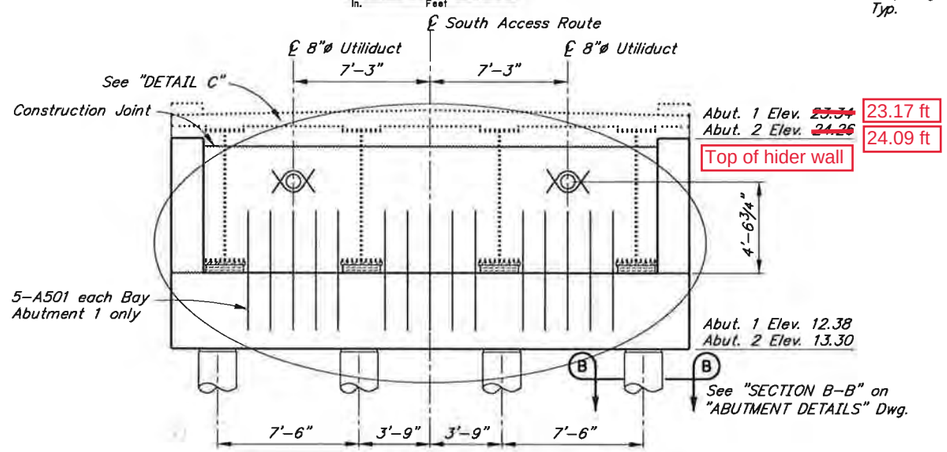

ELEVATION
(Looking back on station)

In. 12 0 4 8 Feet

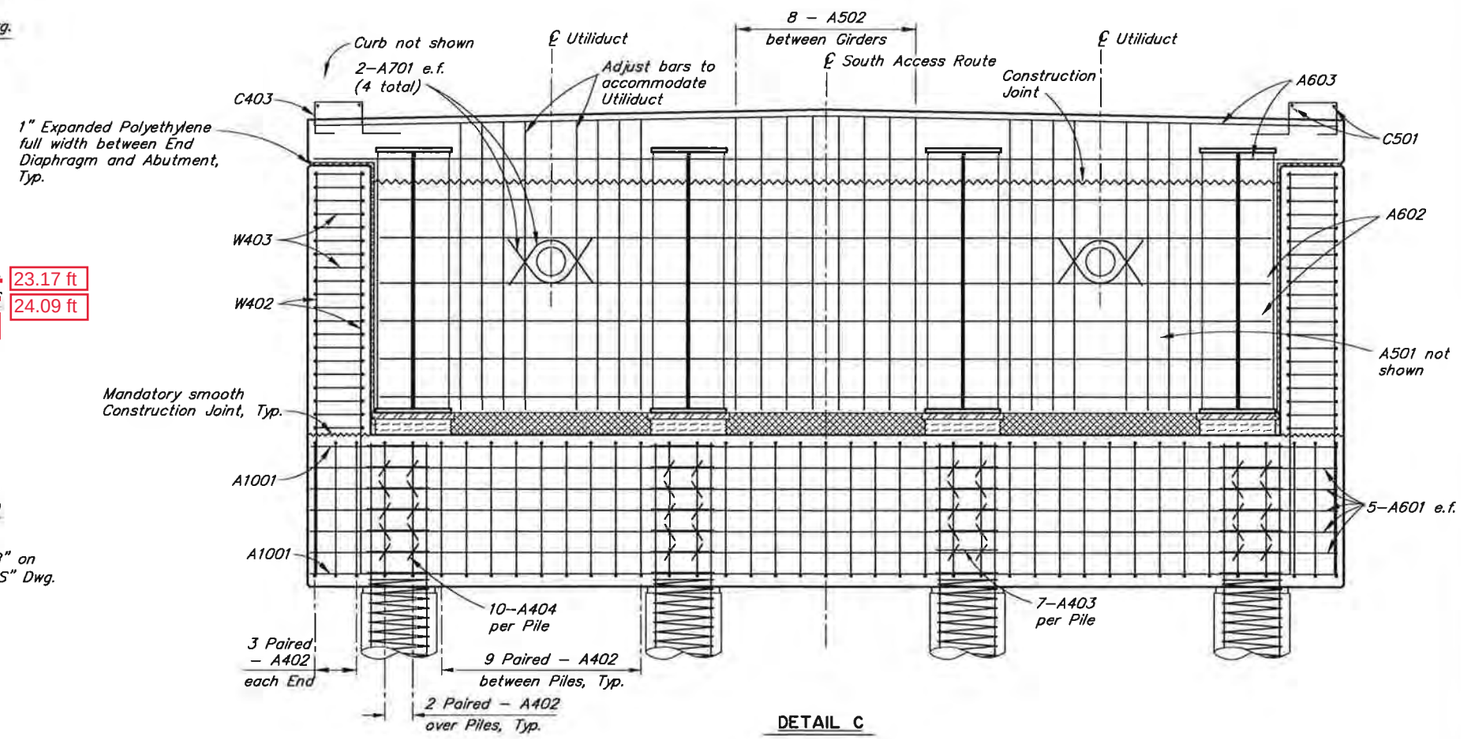

DETAIL C

In. 12 6 0 1 2 3 4 Feet

DESIGNED BY: Elmer Marx	CHECKED: Ben Fetterhoff
DRAWN BY: Sam Sollie	CHECKED: Elmer Marx
QUANTITIES BY: Elmer Marx	CHECKED: Ben Fetterhoff

STATE OF ALASKA
DEPARTMENT OF TRANSPORTATION AND PUBLIC FACILITIES
BRIDGE SECTION
3132 Channel Drive
Juneau, Alaska 99801
907–465–2975

STATE OF ALASKA 49TH Elmer E. Marx III 08-28-2019 SE# 13260 REGISTERED STRUCTURAL ENGINEER

KIVALINA LAGOON BRIDGE

SOUTH ACCESS ROUTE

ABUTMENTS

BRIDGE NO. 2344
DWG. NO. 3

R:\evault\2344\cad\2019 Signed\2344-1-ABUT 1 Wed, Aug/28/19 07:47am

STATE	PROJECT DESIGNATION	YEAR	SHEET NO.	TOTAL SHEETS
ALASKA	NFHWY00366	2019	N4	N17

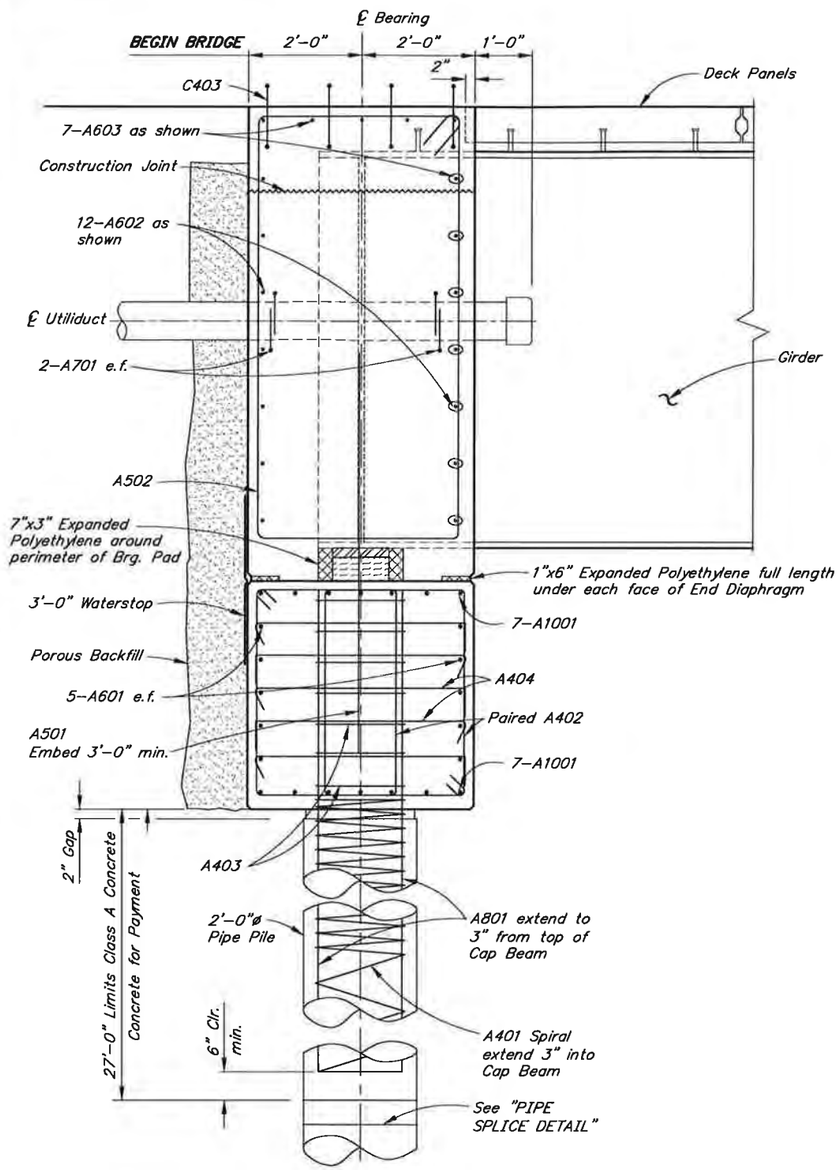

SECTION A-A - ABUTMENT 1

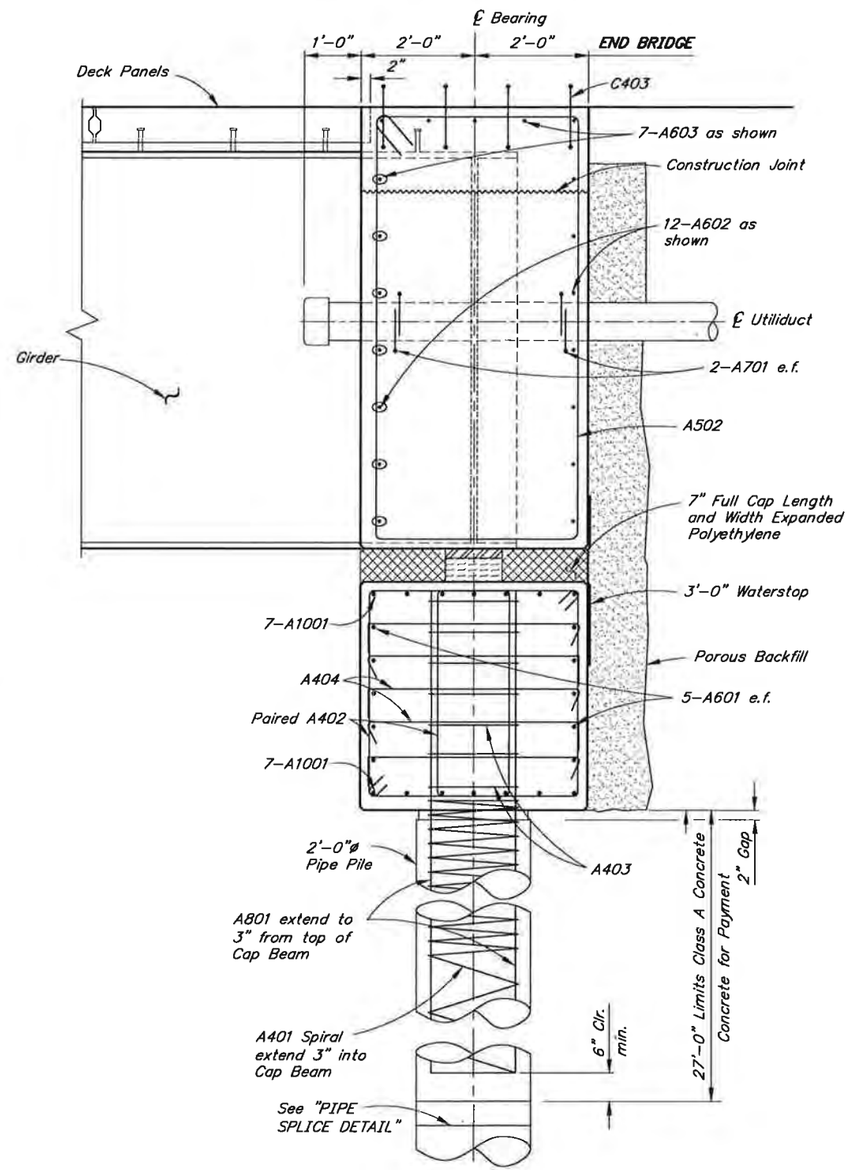

SECTION A-A - ABUTMENT 2

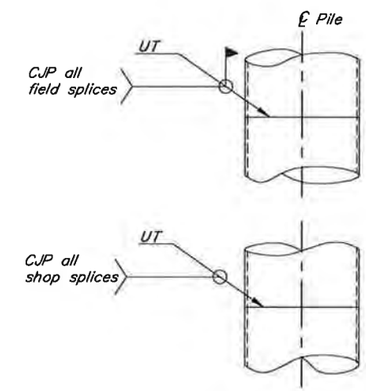

PIPE SPLICE DETAIL

No Scale

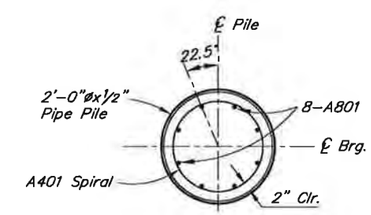

SECTION B-B

DESIGNED BY: Elmer Marx
CHECKED: Ben Fellerhoff
DRAWN BY: Sam Sollie
CHECKED: Elmer Marx
QUANTITIES BY: Elmer Marx
CHECKED: Ben Fellerhoff

STATE OF ALASKA
DEPARTMENT OF TRANSPORTATION AND PUBLIC FACILITIES
BRIDGE SECTION
3132 Channel Drive
Juneau, Alaska 99801
907-465-2975

STATE OF ALASKA 49TH Elmer E. Marx III 08-28-2019 SE# 13260 REGISTERED STRUCTURAL ENGINEER

KIVALINA LAGOON BRIDGE

SOUTH ACCESS ROUTE

ABUTMENT DETAILS

BRIDGE NO. 2344
DWG. NO. 4

R:\evault\2344\cad\2019 Signed\2344-1-ABUT DET Wed, Aug/28/19 07:47am

STATE	PROJECT DESIGNATION	YEAR	SHEET NO.	TOTAL SHEETS
ALASKA	NFHWY00366	2019	N5	N17

REINFORCING STEEL - ONE ABUTMENT

MARK	NOTE	SIZE	NO.	LENGTH	TYPE	BENDING DIAGRAM
W401		4	104	VARIES	---	
W402		4	16	10'-6"	---	
W403		4	40	10'-7"	STIRRUP	
W501		5	30	VARIES	---	
W901		9	4	30'-3"	BENT	
W902		9	30	VARIES	---	
W903		9	4	26'-1"	BENT	
C402	E	4	38	7'-7"	STIRRUP	
C502	E	5	4	24'-6"	---	

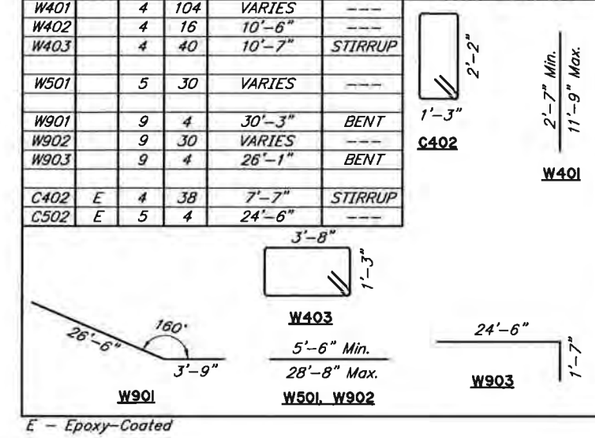

E – Epoxy-Coated

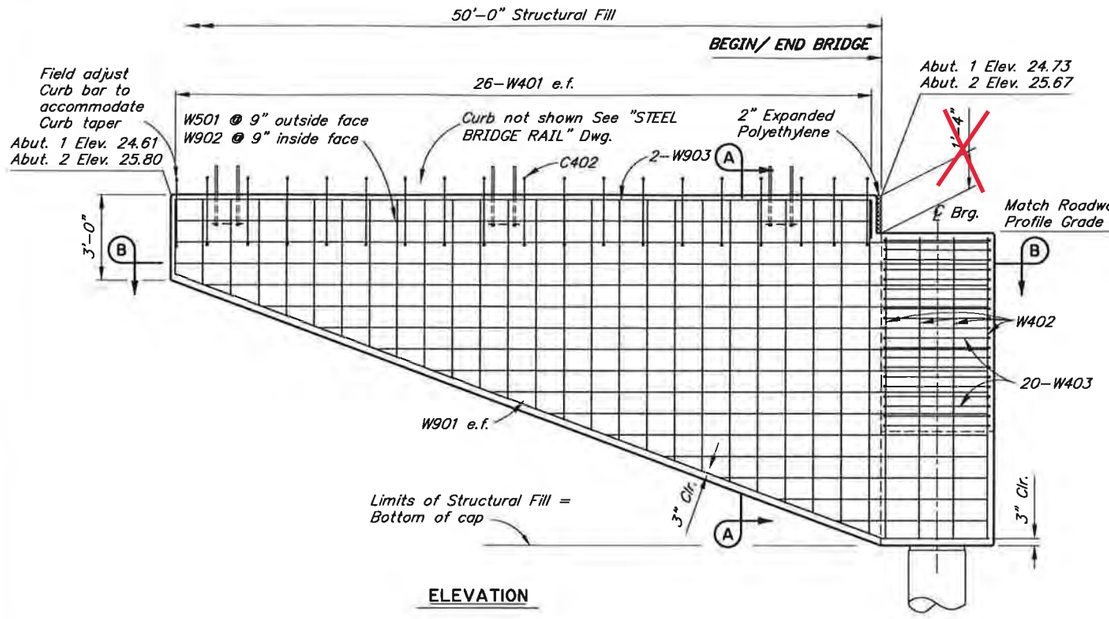

ELEVATION

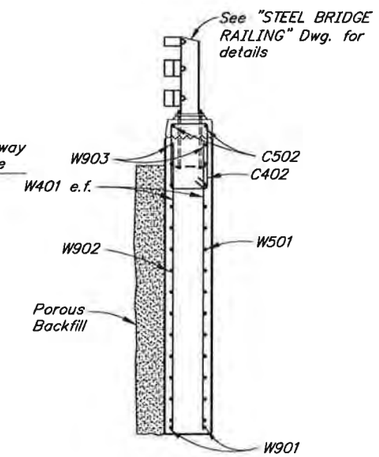

SECTION A-A

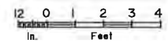

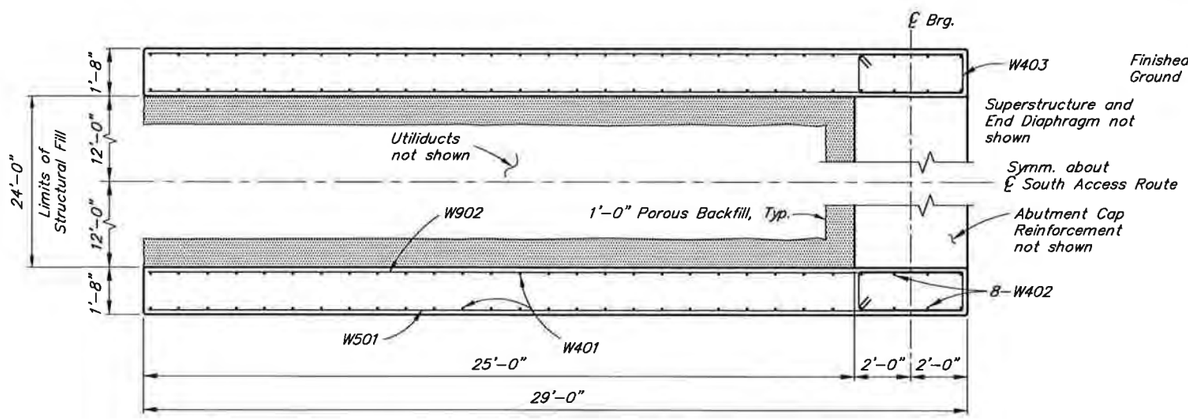

SECTION B-B

(Abutment 1 shown, Abutment 2 similar)

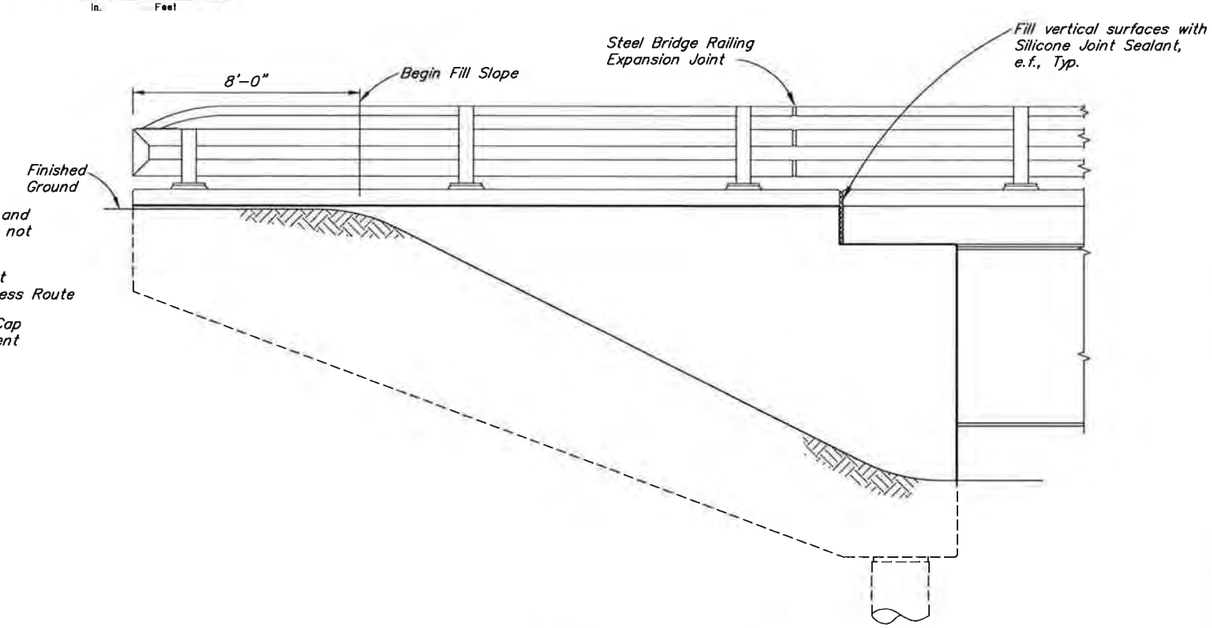

FINISHED ELEVATION

DESIGNED BY: Elmer Marx	CHECKED: Ben Fetterhoff	
DRAWN BY: Sam Sollie	CHECKED: Elmer Marx	
QUANTITIES BY: Elmer Marx	CHECKED: Ben Fetterhoff	

STATE OF ALASKA
DEPARTMENT OF TRANSPORTATION AND PUBLIC FACILITIES
BRIDGE SECTION
3132 Channel Drive
Juneau, Alaska 99801
907-465-2975

STATE OF ALASKA 49TH Egbert E. Marx III 09-26-2019 SER 13260 REGISTERED STRUCTURAL ENGINEER

KIVALINA LAGOON BRIDGE

SOUTH ACCESS ROUTE

WINGWALLS

BRIDGE NO. 2344
DWG. NO. 5

R:\evault\2344\cad\2019 Signed\2344-1-WINGWALLS Wed, Aug/28/19 07:47am

STATE	PROJECT DESIGNATION	YEAR	SHEET NO.	TOTAL SHEETS
ALASKA	NFHWY00366	2019	N6	N17

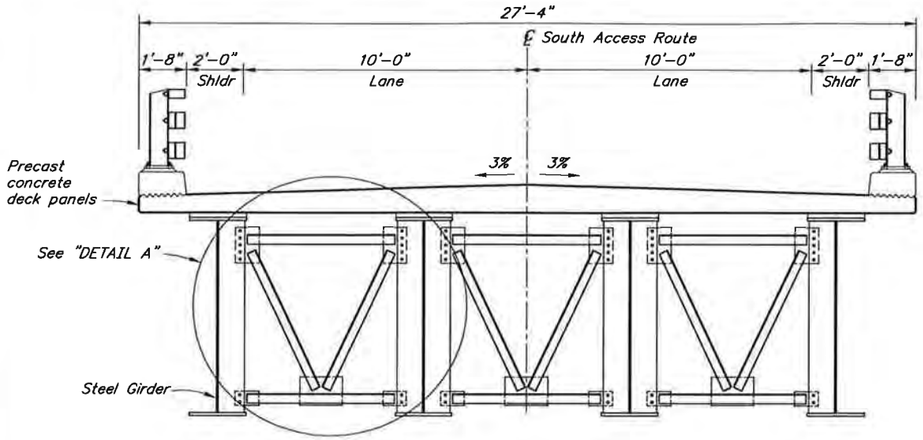

AT INTERMEDIATE CROSS-FRAME

TYPICAL SECTION

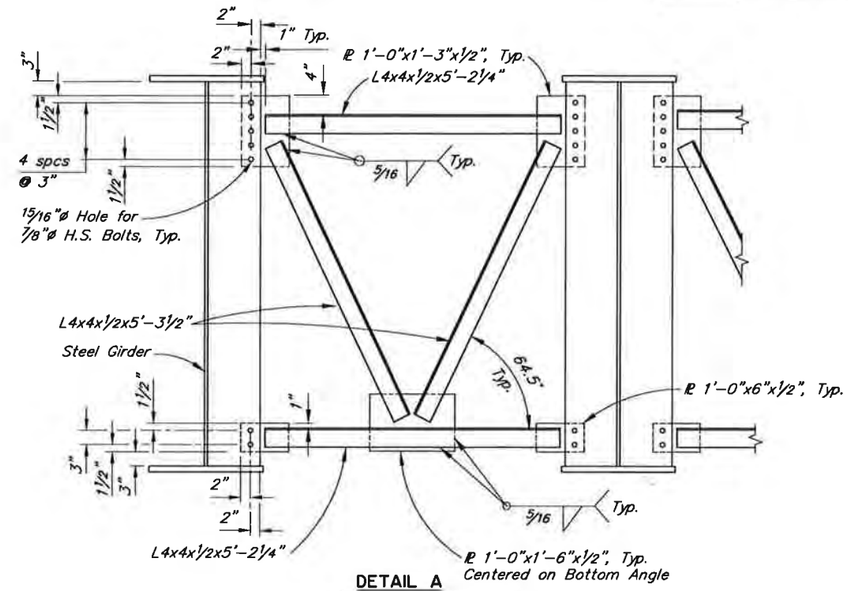

DETAIL A

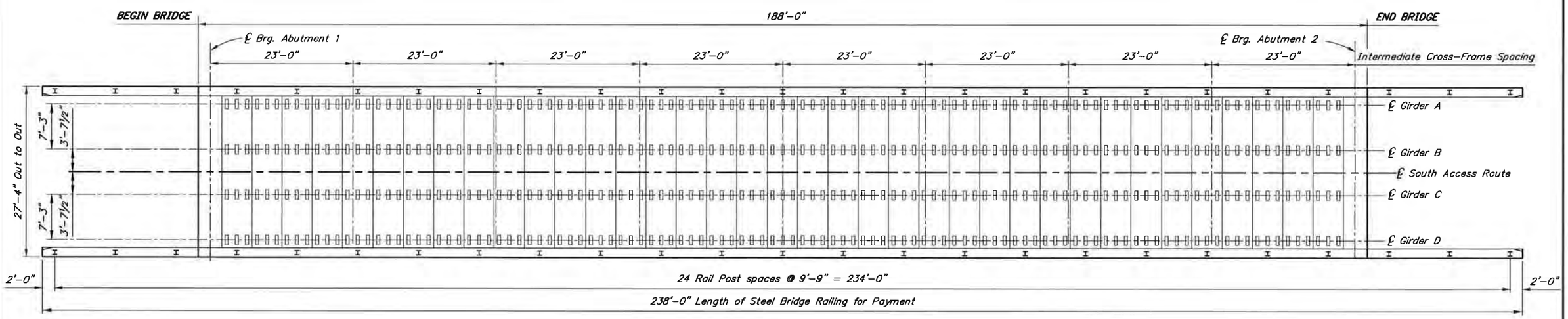

FRAMING PLAN

DESIGNED BY: Elmer Marx	CHECKED: Ben Fetterhoff
DRAWN BY: Sam Sollie	CHECKED: Elmer Marx
QUANTITIES BY: Elmer Marx	CHECKED: Ben Fetterhoff

STATE OF ALASKA
DEPARTMENT OF TRANSPORTATION AND PUBLIC FACILITIES
BRIDGE SECTION
3132 Channel Drive
Juneau, Alaska 99801
907-465-2975

STATE OF ALASKA 49TH Elmer E. Marx III 08-28-2019 SE# 13260 REGISTERED STRUCTURAL ENGINEER

KIVALINA LAGOON BRIDGE

SOUTH ACCESS ROUTE

TYPICAL SECTION AND FRAMING PLAN

BRIDGE NO. 2344
DWG. NO. 6

R:\evault\2344\cad\2019 Signed\2344-1-FRAMING Wed, Aug/28/19 07:47am

STATE	PROJECT DESIGNATION	YEAR	SHEET NO.	TOTAL SHEETS
ALASKA	NFHWY00366	2019	N7	N17

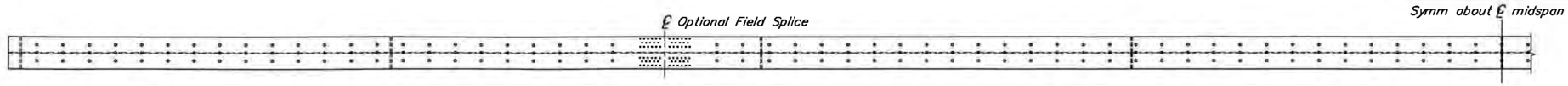

PLAN

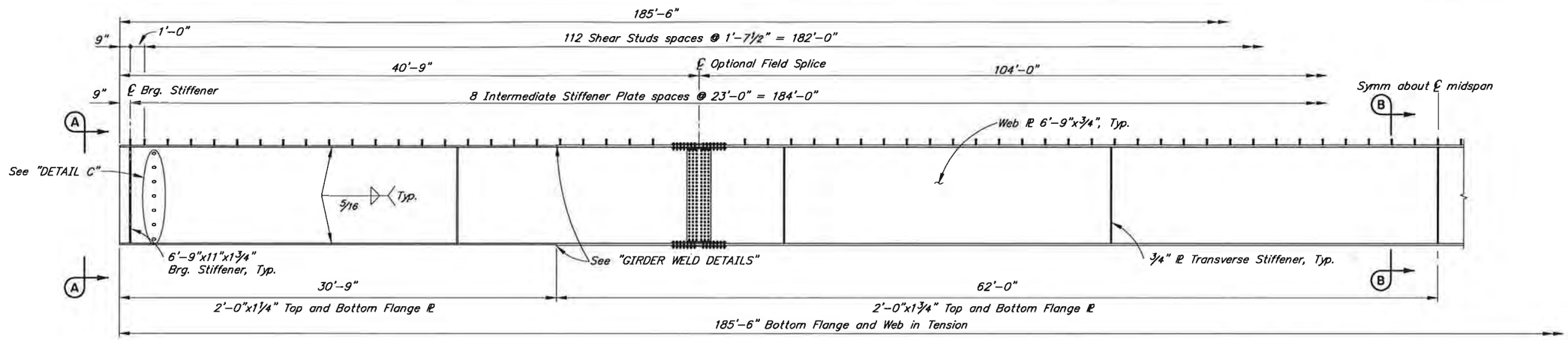

GIRDER ELEVATION

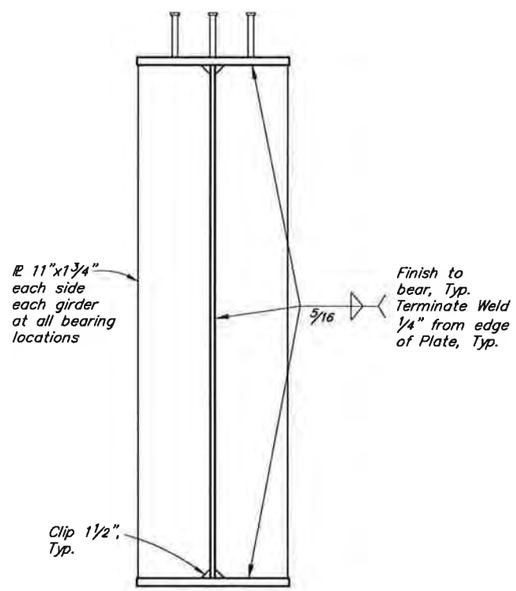

VIEW A-A

(BEARING STIFFENERS)

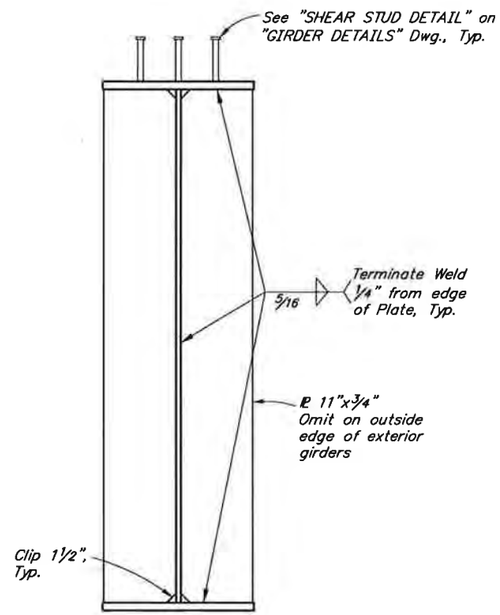

SECTION B-B

(TRANSVERSE STIFFENERS)

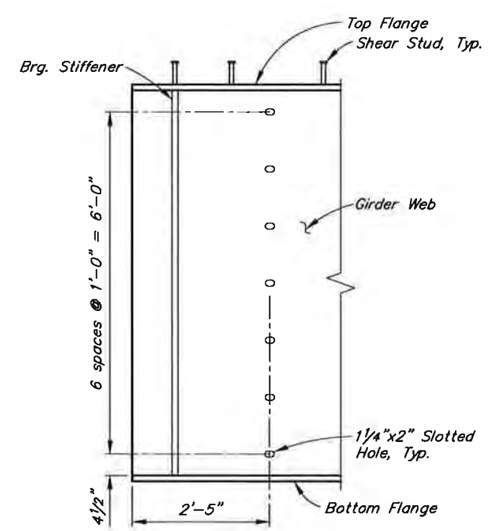

DETAIL C

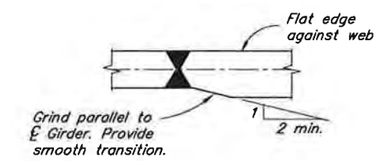

FLANGE TRANSITION

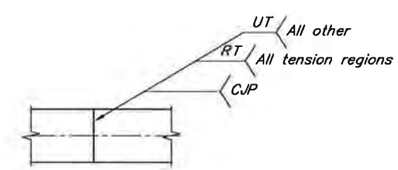

PLAN

FLANGE SPLICE

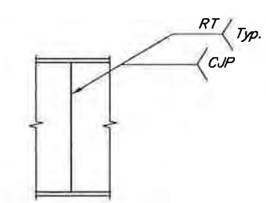

ELEVATION

WEB SPLICE

GIRDER WELD DETAILS

No Scale

DESIGNED BY: Elmer Marx	CHECKED: Ben Fetterhoff	
DRAWN BY: Sam Sollie	CHECKED: Elmer Marx	
QUANTITIES BY: Elmer Marx	CHECKED: Ben Fetterhoff	

STATE OF ALASKA
DEPARTMENT OF TRANSPORTATION AND PUBLIC FACILITIES
BRIDGE SECTION
3132 Channel Drive
Juneau, Alaska 99801
907-465-2975

STATE OF ALASKA 49TH Elmer E. Marx III 08-28-2019 SE# 13260 REGISTERED STRUCTURAL ENGINEER

KIVALINA LAGOON BRIDGE

SOUTH ACCESS ROUTE

GIRDERS

BRIDGE NO. 2344
DWG. NO. 7

R:\evault\2344\cad\2019 Signed\2344-1-GIRDERS Wed, Aug/28/19 07:47am

STATE	PROJECT DESIGNATION	YEAR	SHEET NO.	TOTAL SHEETS
ALASKA	NFHWY00366	2019	N8	N17

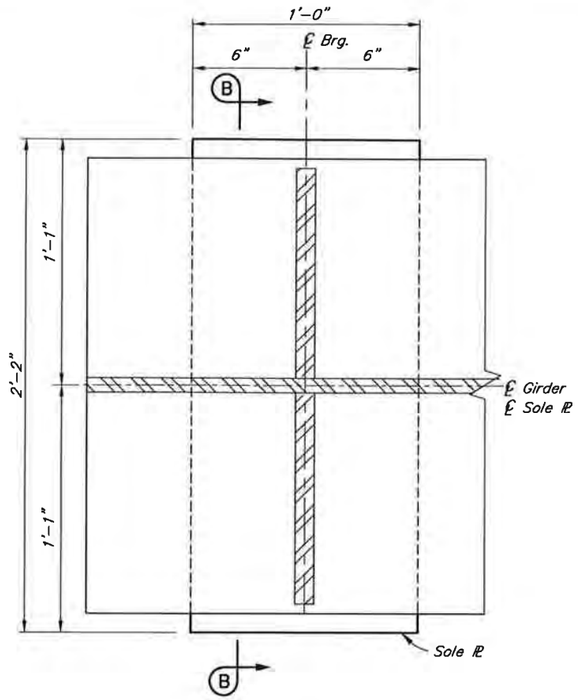

PLAN

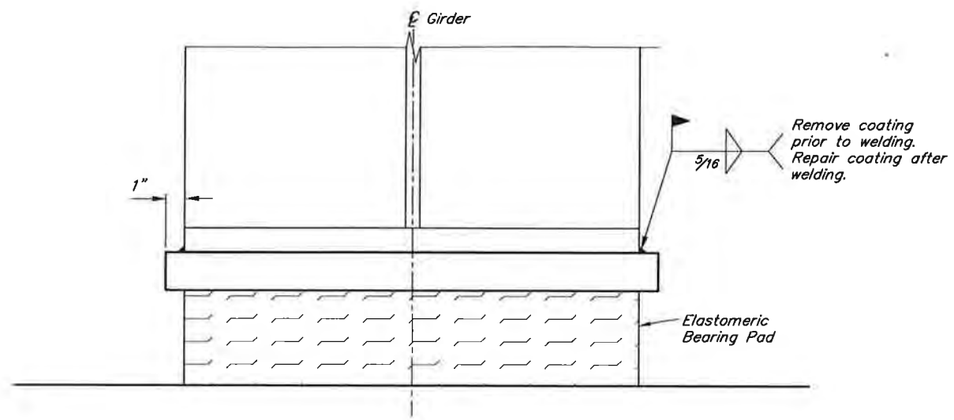

SECTION B-B

6 3 0 1
In. Feet

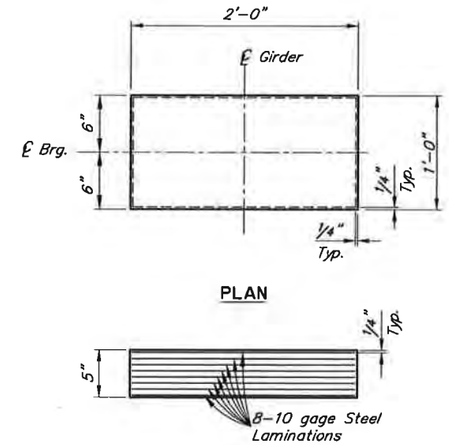

PLAN

ELEVATION

ELASTOMERIC BEARING PAD

Grade 5
Max. Dead Load = 163 k
Max. Live Load = 97 k
Shear Modulus = 115 psi

12 6 0 1
In. Feet

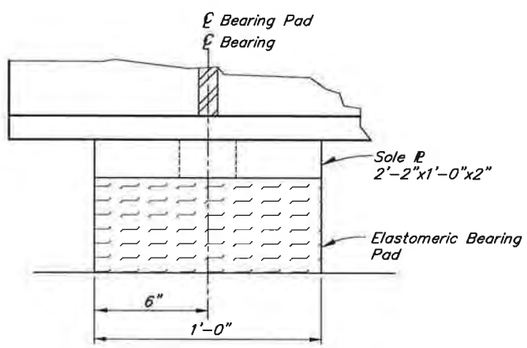

ELEVATION

BEARING DETAILS

6 3 0 1
In. Feet

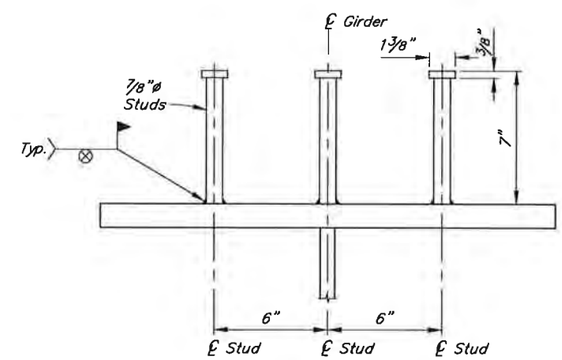

SHEAR STUD DETAIL

6 3 0 1
In. Feet

DESIGNED BY: Elmer Marx	CHECKED: Ben Fetterhoff	
DRAWN BY: Sam Sollie	CHECKED: Elmer Marx	
QUANTITIES BY: Elmer Marx	CHECKED: Ben Fetterhoff	

STATE OF ALASKA
DEPARTMENT OF TRANSPORTATION AND PUBLIC FACILITIES
BRIDGE SECTION
3132 Channel Drive
Juneau, Alaska 99801
907-465-2975

STATE OF ALASKA 49TH Elmer E. Marx III 08-28-2019 SE# 13260 REGISTERED STRUCTURAL ENGINEER

KIVALINA LAGOON BRIDGE

SOUTH ACCESS ROUTE

GIRDER DETAILS

BRIDGE NO. 2344
DWG. NO. 8

R:\evault\2344\cad\2019 Signed\2344-1-GIRDER DETAILS Wed, Aug/28/19 07:47am

STATE	PROJECT DESIGNATION	YEAR	SHEET NO.	TOTAL SHEETS
ALASKA	NFHWY00366	2019	N9	N17

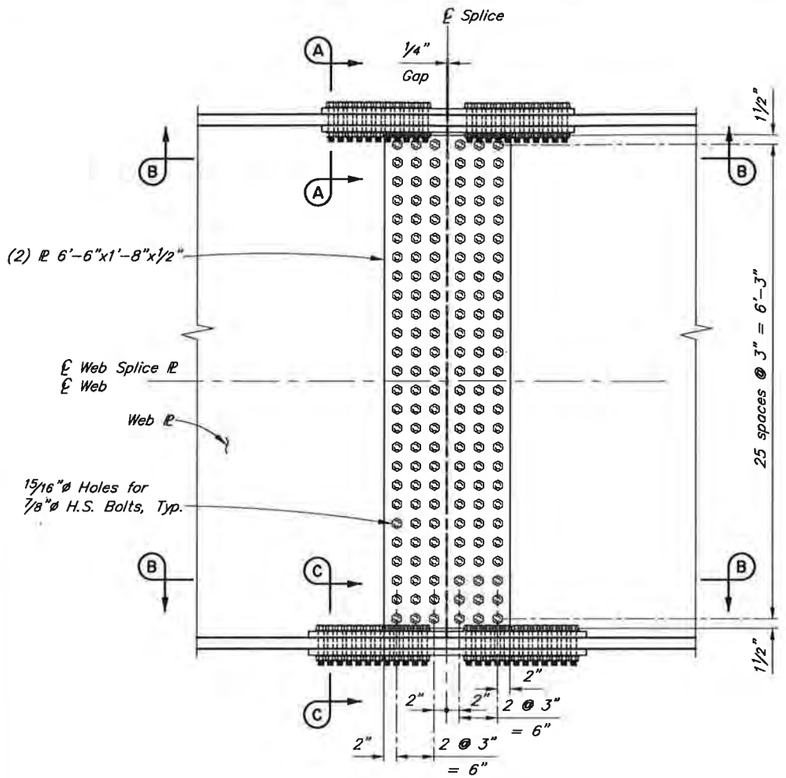

FIELD SPLICE CONNECTION DETAIL

12 6 0 1 2
In. Feet

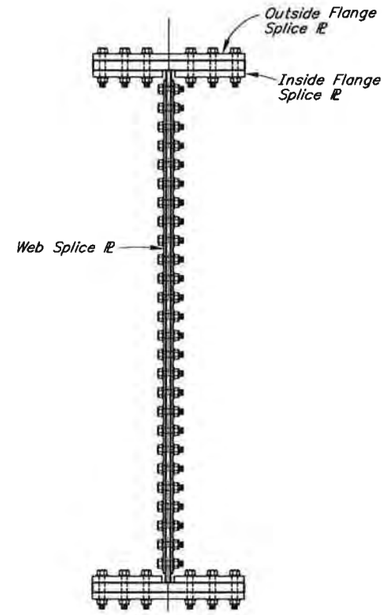

TYPICAL SECTION

12 6 0 1 2
In. Feet

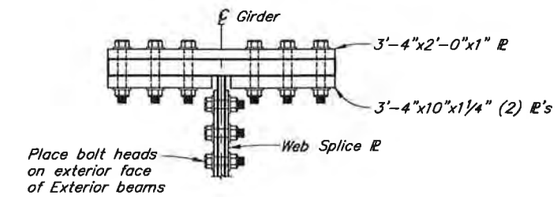

SECTION A-A

12 6 0 1
In. Feet

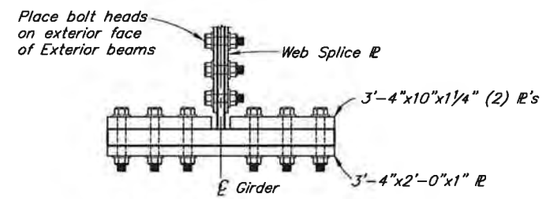

SECTION C-C

12 6 0 1
In. Feet

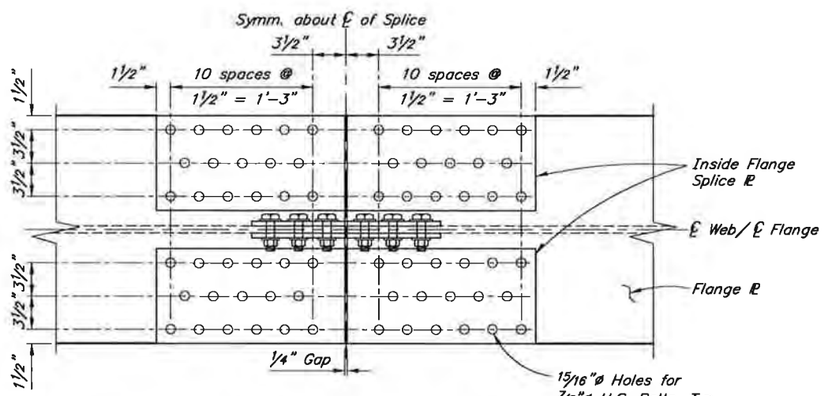

SECTION B-B

12 6 0 1
In. Feet

NOTE:

1. Girders and splice plates must be galvanized in accordance with SSPC CS23.00, to provide Class B surface condition for slip-critical connection.
2. Two bolted field splices are permitted in each girder.

DESIGNED BY: Elmer Marx	CHECKED: Ben Fetterhoff
DRAWN BY: Sam Sollie	CHECKED: Elmer Marx
QUANTITIES BY: Elmer Marx	CHECKED: Ben Fetterhoff

STATE OF ALASKA
DEPARTMENT OF TRANSPORTATION AND PUBLIC FACILITIES
BRIDGE SECTION
3132 Channel Drive
Juneau, Alaska 99801
907-465-2975

STATE OF ALASKA 49TH Elmer E. Marx III 08-28-2019 SE# 13260 REGISTERED STRUCTURAL ENGINEER

KIVALINA LAGOON BRIDGE

SOUTH ACCESS ROUTE

OPTIONAL BOLTED SPLICE DETAILS

BRIDGE NO. 2344
DWG. NO. 9

R:\evault\2344\cad\2019 Signed\2344-1-SPLICE Wed, Aug/28/19 07:47am

STATE	PROJECT DESIGNATION	YEAR	SHEET NO.	TOTAL SHEETS
ALASKA	NFHWY00366	2019	N10	N17

Distance from ℄ Brg. Abut. 1 (ft)	Steel (in)	Deck (in)	Rail & Utilities (in)	Asphalt (in)	Total Deflection (in)
0	0	0	0	0	0
4	0.19	0.31	0.04	0.10	0.65
8	0.38	0.63	0.09	0.20	1.30
12	0.57	0.93	0.13	0.30	1.94
16	0.76	1.24	0.17	0.40	2.57
20	0.94	1.53	0.21	0.50	3.18
24	1.11	1.81	0.25	0.59	3.77
28	1.28	2.09	0.29	0.68	4.33
32	1.44	2.34	0.33	0.76	4.87
36	1.59	2.59	0.36	0.84	5.39
40	1.74	2.83	0.39	0.92	5.87
44	1.87	3.05	0.42	0.99	6.34
48	2.00	3.25	0.45	1.06	6.77
52	2.12	3.45	0.48	1.12	7.16
56	2.23	3.62	0.50	1.18	7.53
60	2.33	3.78	0.53	1.23	7.86
64	2.41	3.92	0.55	1.28	8.16
68	2.49	4.05	0.56	1.32	8.42
72	2.55	4.15	0.58	1.35	8.64
76	2.61	4.24	0.59	1.38	8.82
80	2.65	4.31	0.60	1.40	8.96
84	2.68	4.36	0.61	1.42	9.06
88	2.70	4.39	0.61	1.43	9.12
92	2.71	4.40	0.61	1.43	9.14
96	2.70	4.39	0.61	1.43	9.12
100	2.68	4.36	0.61	1.42	9.06
104	2.65	4.31	0.60	1.40	8.96
108	2.61	4.24	0.59	1.38	8.82
112	2.55	4.15	0.58	1.35	8.64
116	2.49	4.05	0.56	1.32	8.42
120	2.41	3.92	0.55	1.28	8.16
124	2.33	3.78	0.53	1.23	7.86
128	2.23	3.62	0.50	1.18	7.53
132	2.12	3.45	0.48	1.12	7.16
136	2.00	3.25	0.45	1.06	6.77
140	1.87	3.05	0.42	0.99	6.34
144	1.74	2.83	0.39	0.92	5.87
148	1.59	2.59	0.36	0.84	5.39
152	1.44	2.34	0.33	0.76	4.87
156	1.28	2.09	0.29	0.68	4.33
160	1.11	1.81	0.25	0.59	3.77
164	0.94	1.53	0.21	0.50	3.18
168	0.76	1.24	0.17	0.40	2.57
172	0.57	0.93	0.13	0.30	1.94
176	0.38	0.63	0.09	0.20	1.30
180	0.19	0.31	0.04	0.10	0.65
184	0	0	0	0	0.00

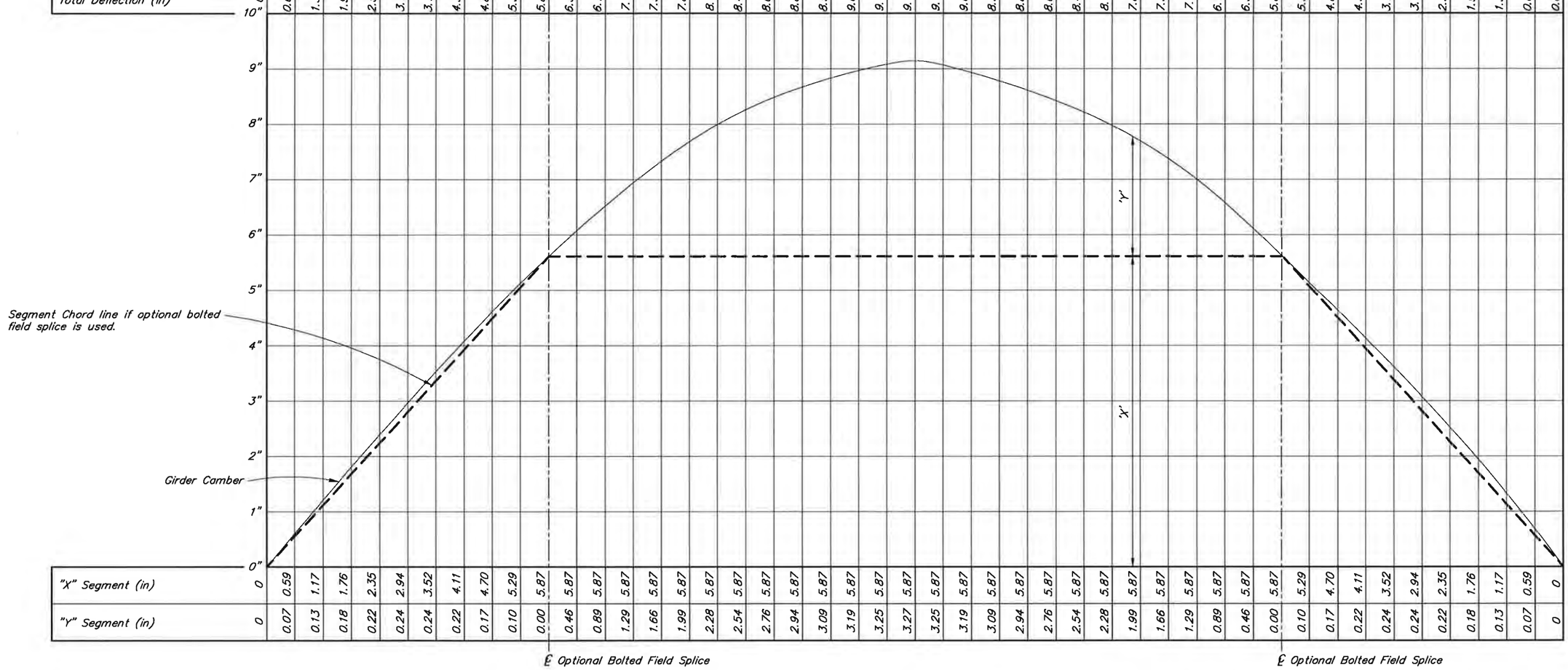

Distance from ℄ Brg. Abut. 1 (ft)	"X" Segment (in)	"Y" Segment (in)
0	0	0
4	0.59	0.07
8	1.17	0.13
12	1.76	0.18
16	2.35	0.22
20	2.94	0.24
24	3.52	0.24
28	4.11	0.22
32	4.70	0.17
36	5.29	0.10
40	5.87	0.00
44	5.87	0.46
48	5.87	0.89
52	5.87	1.29
56	5.87	1.66
60	5.87	1.99
64	5.87	2.28
68	5.87	2.54
72	5.87	2.76
76	5.87	2.94
80	5.87	3.09
84	5.87	3.19
88	5.87	3.25
92	5.87	3.27
96	5.87	3.25
100	5.87	3.19
104	5.87	3.09
108	5.87	2.94
112	5.87	2.76
116	5.87	2.54
120	5.87	2.28
124	5.87	1.99
128	5.87	1.66
132	5.87	1.29
136	5.87	0.89
140	5.87	0.46
144	5.87	0.00
148	5.29	0.10
152	4.70	0.17
156	4.11	0.22
160	3.52	0.24
164	2.94	0.24
168	2.35	0.22
172	1.76	0.18
176	1.17	0.13
180	0.59	0.07
184	0	0

CAMBER DIAGRAM

No Scale

Camber Notes:

1. *Segment Chord line is a straight line through the top of the web connecting the ℄ of bearing @ Abutment to ℄ of field splice.*
2. *Minimum camber (sum of x+y) is provided. Maximum additional camber may vary up to ½" at the mid-span. Additional camber shall vary parabolically.*

DESIGNED BY: Elmer Marx	CHECKED: Ben Fatterhoff
DRAWN BY: Sam Sollie	CHECKED: Elmer Marx
QUANTITIES BY: Elmer Marx	CHECKED: Ben Fatterhoff

STATE OF ALASKA
DEPARTMENT OF TRANSPORTATION AND PUBLIC FACILITIES
BRIDGE SECTION
3132 Channel Drive
Juneau, Alaska 99801
907-465-2975

STATE OF ALASKA 49TH Elmer E. Marx III 08-28-2019 SE# 13269 REGISTERED STRUCTURAL ENGINEER

KIVALINA LAGOON BRIDGE

SOUTH ACCESS ROUTE

CAMBER DIAGRAM

BRIDGE NO. 2344
DWG. NO. 10

R:\evault\2344\cad\2019 Signed\2344-1-CAMBER Wed, Aug/28/19 07:48am

STATE	PROJECT DESIGNATION	YEAR	SHEET NO.	TOTAL SHEETS
ALASKA	NFHWY00366	2019	N11	N17

REINFORCING STEEL - ONE PANEL

MARK	NOTE	SIZE	NO.	LENGTH	TYPE	BENDING DIAGRAM
C401	E	4	8	4'-5"	BENT	
C501	E	5	4	187'-8"	BENT	
D601	E,M	6	8	28'-4"	BENT	
D602	E	6	8	27'-0"	---	
D603	E	6	64	4'-5"	---	

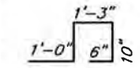

C401

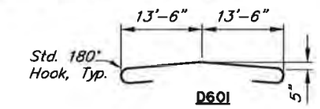

D601

E – Epoxy-Coated

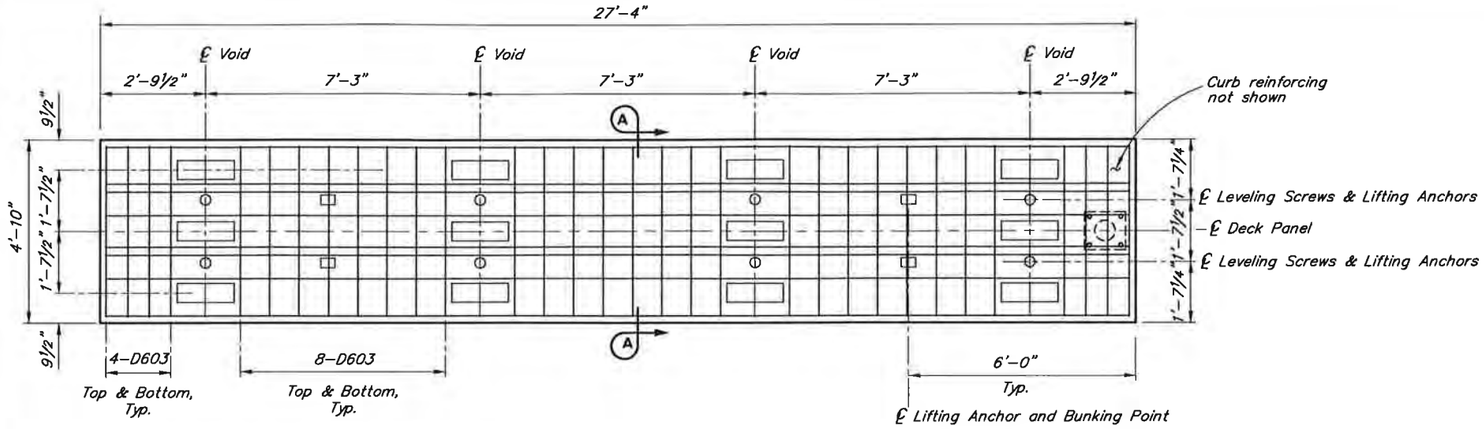

PANEL WITHOUT RAIL POST DETAIL
(18 Total)

PANEL WITH RAIL POST DETAIL
(19 Total)

DECK PANEL - PLAN

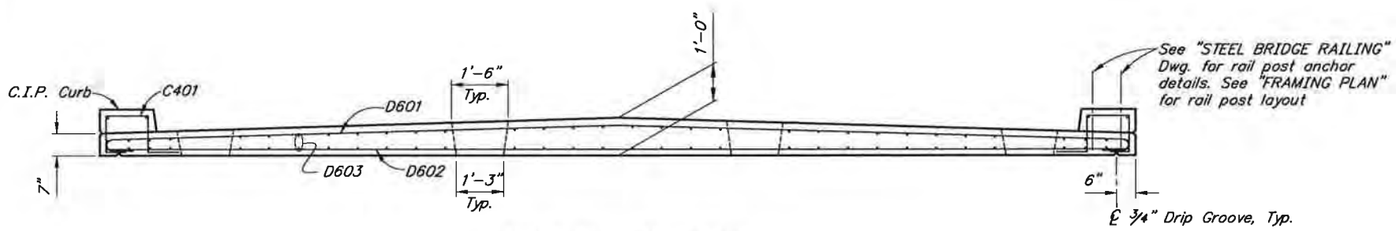

DECK PANEL - ELEVATION

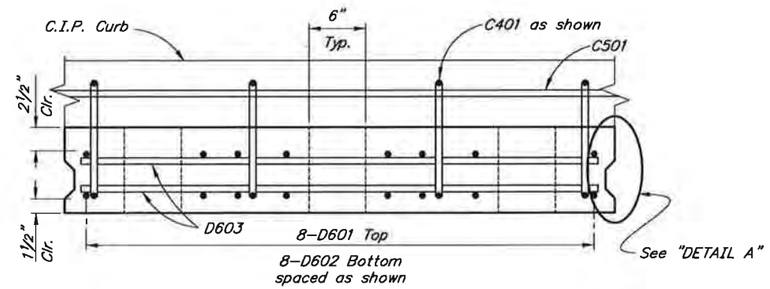

SECTION A-A

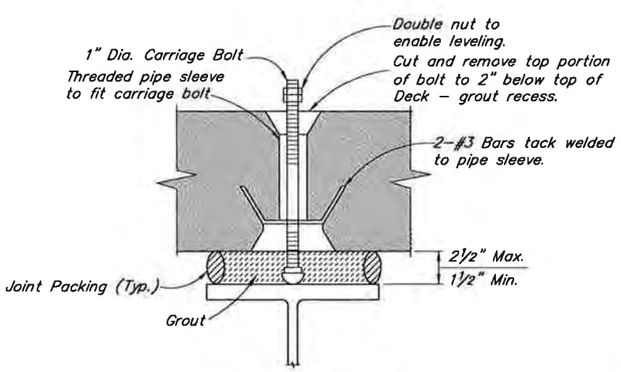

LEVELING SCREW DETAIL
No Scale

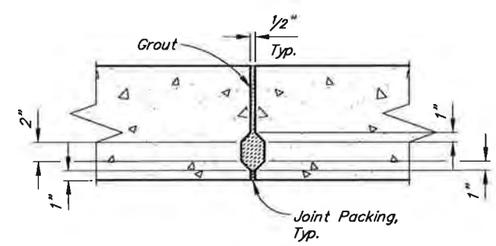

DETAIL A
No Scale

NOTES:

1. Provide rough broom finish on deck.
2. Roughen surface under curbs.
3. Finish top grout surface to match top of deck.
4. Rotate hook bars to provide specified cover.

DESIGNED BY: Elmer Marx	CHECKED: Ben Fetterhoff
DRAWN BY: Sam Sollie	CHECKED: Elmer Marx
QUANTITIES BY: Elmer Marx	CHECKED: Ben Fetterhoff

STATE OF ALASKA
DEPARTMENT OF TRANSPORTATION AND PUBLIC FACILITIES
BRIDGE SECTION
3132 Channel Drive
Juneau, Alaska 99801
907-465-2975

STATE OF ALASKA 49TH Elmer E. Marx III 08-28-2019 SE# 13260 REGISTERED STRUCTURAL ENGINEER

KIVALINA LAGOON BRIDGE

SOUTH ACCESS ROUTE

DECK PANELS

BRIDGE NO. 2344
DWG. NO. 11

R:\evault\2344\cad\2019 Signed\2344-1-PANELS Wed, Aug/28/19 07:48am

STATE	PROJECT DESIGNATION	YEAR	SHEET NO.	TOTAL SHEETS
ALASKA	NFHWY00366	2019	N12	N17

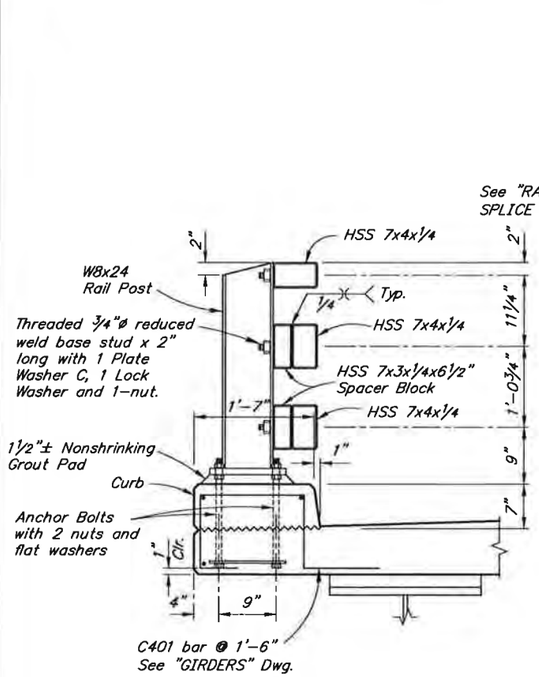

TYPICAL SECTION

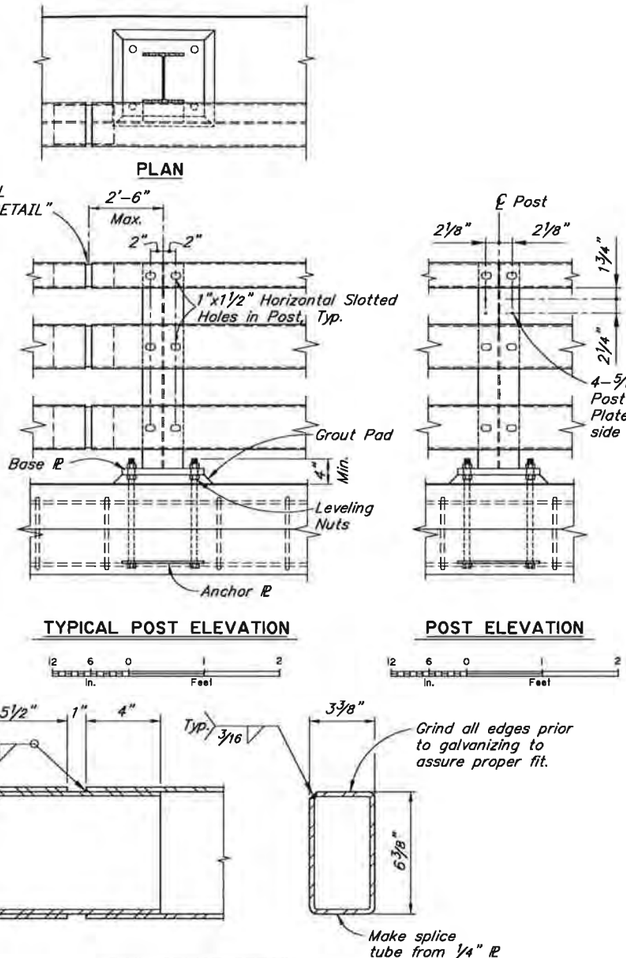

TYPICAL POST ELEVATION

POST ELEVATION

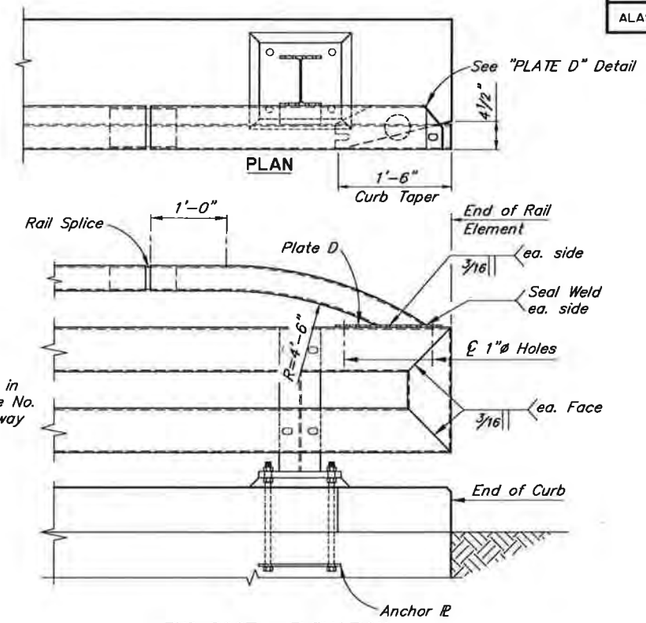

END POST - ELEVATION

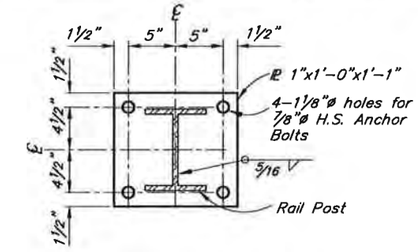

BASE PLATE DETAIL

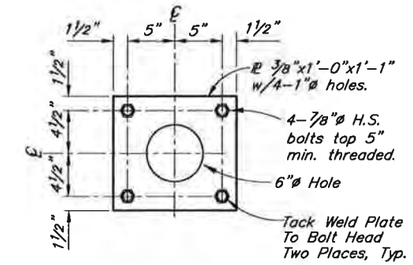

ANCHOR PLATE DETAIL

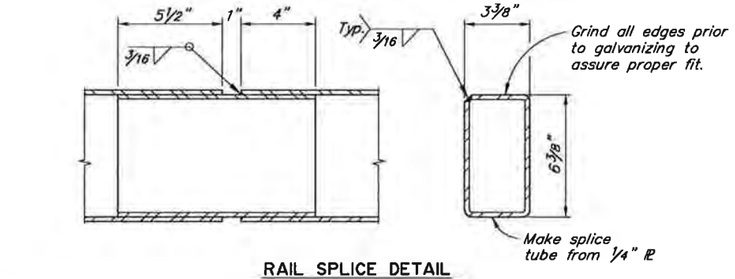

RAIL SPLICE DETAIL

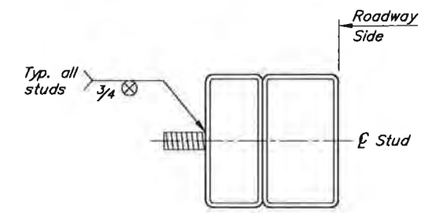

RAILING STUD DETAIL

(Lower rail shown, upper rail similar)
No Scale

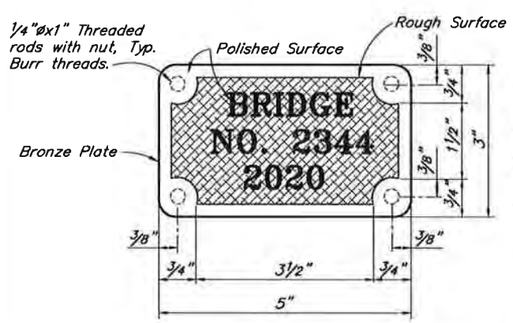

BRONZE BRIDGE NO. PLATE
No Scale

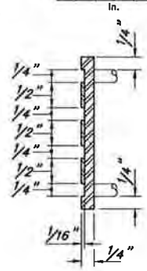

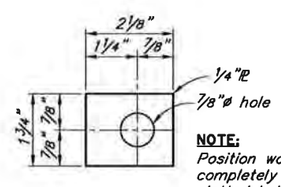

NOTE:
Position washer to completely cover slotted hole

PLATE WASHER C
No Scale

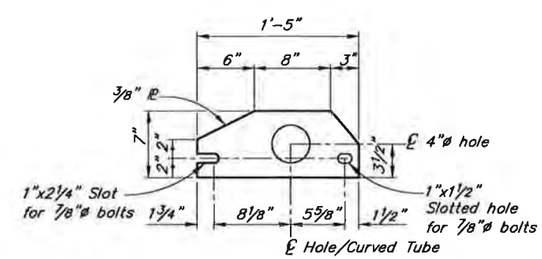

PLATE D

NOTES:

1. Locate bridge number plates as shown (2 total) on "GENERAL LAYOUT" Dwg.
2. Furnish bridge number plates. Use bronze with "Century" type style lettering. Use studs and nuts that conform to UNS C65100 or C65500. Braze 1/4"ø threaded rod to back of plate with nut – 4 required. Use locking nuts or lock washers on all machine bolts.
3. Provide railing expansion joints at 50'-0" max. intervals. Provide a minimum of 2 rail posts between railing expansion joints. Railing expansion joints are required in rail panels that span bridge expansion joints.
4. Install posts plumb.
5. Use grout with a minimum 24-hour f'c of 3,000 psi.
6. See "FRAMING PLAN AND TYPICAL SECTION" Dwg. for rail post spacing.

DESIGNED BY: Elmer Marx	CHECKED: Ben Fetterhoff
DRAWN BY: Sam Sollie	CHECKED: Elmer Marx
QUANTITIES BY: Elmer Marx	CHECKED: Ben Fetterhoff

STATE OF ALASKA
DEPARTMENT OF TRANSPORTATION AND PUBLIC FACILITIES
BRIDGE SECTION
3132 Channel Drive
Juneau, Alaska 99801
907-465-2975

STATE OF ALASKA 49TH Elmer E. Marx III 05-28-2019 SE# 13260 REGISTERED STRUCTURAL ENGINEER

KIVALINA LAGOON BRIDGE

SOUTH ACCESS ROUTE

STEEL BRIDGE RAILING

BRIDGE NO. 2344
DWG. NO. 12

R:\evault\2344\cad\2019 Signed\2344-1-RAILING Wed, Aug/28/19 07:48am

STATE	PROJECT DESIGNATION	YEAR	SHEET NO	TOTAL SHEETS
ALASKA	NFHWY00366	2019	N13	N17

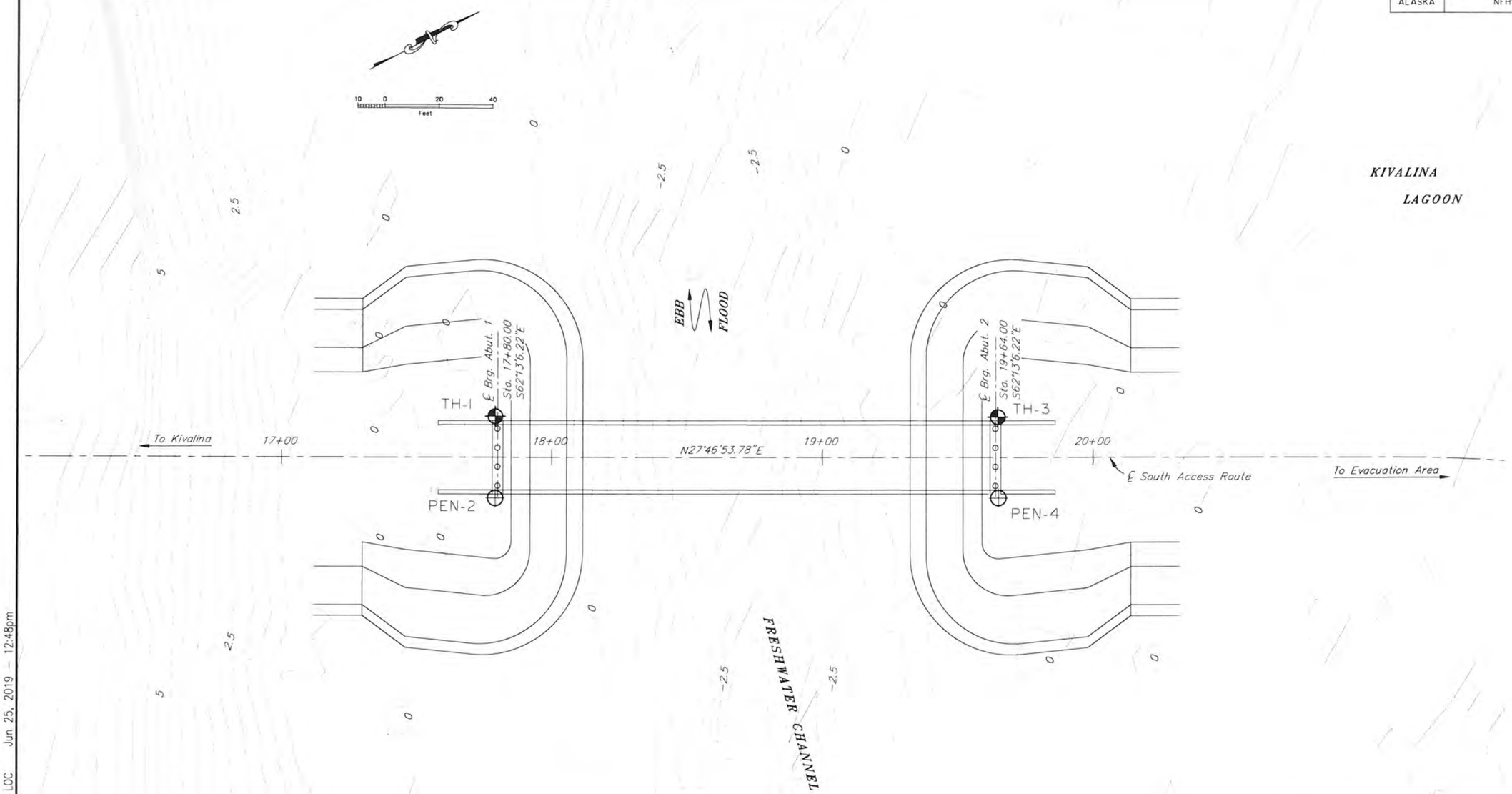

TEST HOLE AND PENETROMETER LOCATIONS				
TEST HOLE / PENETROMETER	STATION	OFFSET	DEPTH	LOCATION
PEN-2	17+79.11	14.99' Rt	57.5'	ABUTMENT 1
TH-1	17+79.13	15.05' Lt	103.0'	ABUTMENT 1
TH-3	19+64.84	14.79' Lt	93.1'	ABUTMENT 2
PEN-4	19+65.07	14.95' Rt	103.7'	ABUTMENT 2

DESIGNED BY: D. Hemstreet	CHECKED: Engineer		
DRAWN BY: R. Angell	CHECKED: J. Nicolazzo		
QUANTITIES BY: Engineer	CHECKED: Engineer		

STATE OF ALASKA
DEPARTMENT OF TRANSPORTATION
AND PUBLIC FACILITIES
STATEWIDE MATERIALS

STATE OF ALASKA 49TH David A. Hemstreet No. CE 9800 REGISTERED PROFESSIONAL ENGINEER
8/20/19

KIVALINA CAUSEWAY

SOUTH ACCESS ROUTE

TEST HOLE & PENETROMETER LOCATION

BRIDGE NO. 2344
DWG. NO. 13

H:\projects\drafting special projects\kivalina\2344_GEO_-14 LOC Jun 25, 2019 - 12:48pm

STATE	PROJECT DESIGNATION	YEAR	SHEET NO.	TOTAL SHEETS
ALASKA	NFHWY00366	2019	N14	N17

TYPICAL TEST HOLE LOG

DATE: Date begun – Date completed
STATION / OFFSET: XX+XX FEET RT or LT

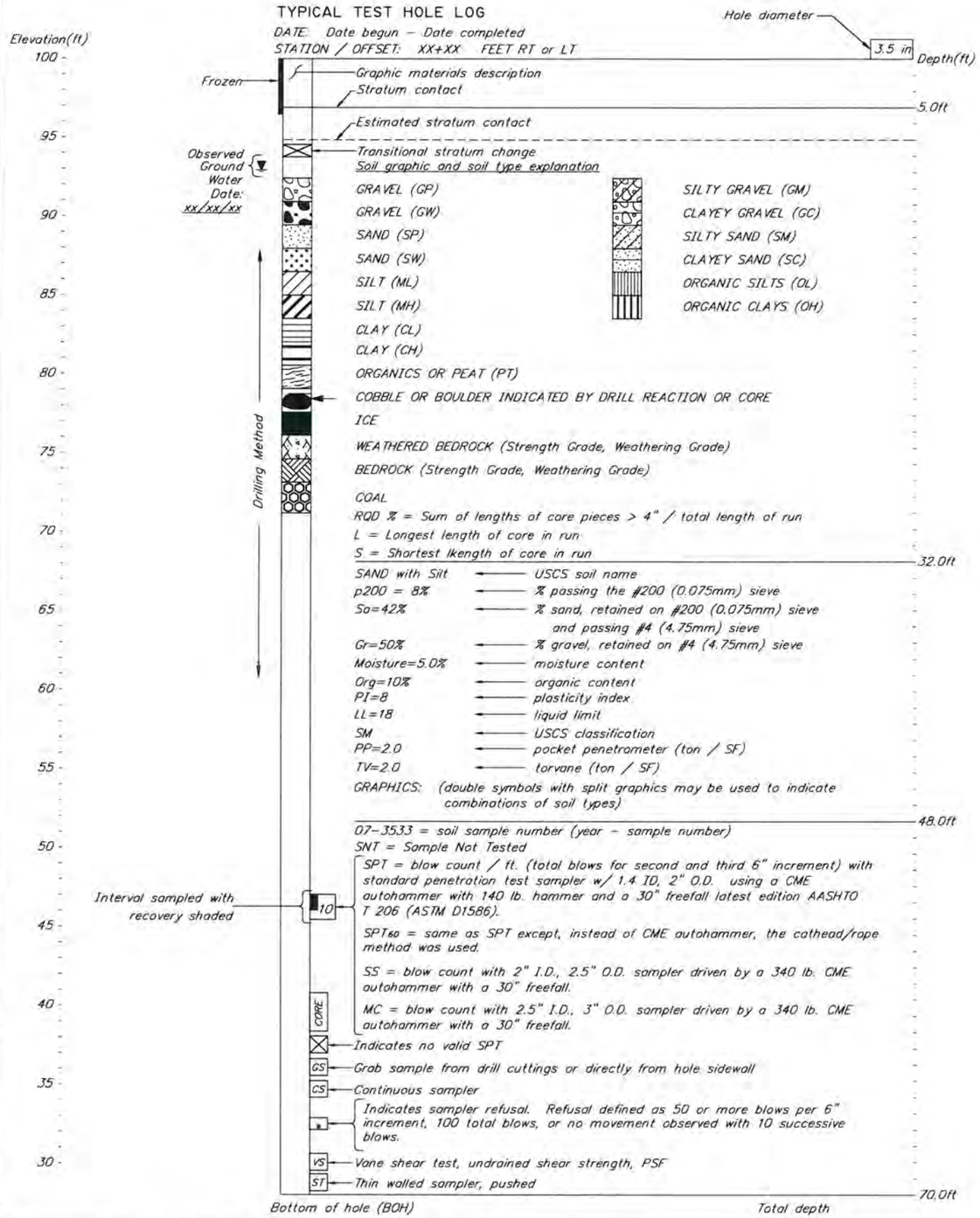

NOTES:

1) The test hole logs depicted graphically in these drawings are distillations of the original field logs, based on post-field investigation review and analysis. These drafted logs include changes made to field descriptions based upon laboratory test data, review and analysis. Detailed field observations of rock and soil sampled during the drilling program are not reproduced in the drafted logs.
2) Description of soils follows Alaska Geotechnical Procedures manual.
Classification of soils follows Unified Soil Classification System (ASTM D2487).
3) The test hole logs from these sheets are an integral part of the Foundation Geology Report. See Construction Contract Bid Documents – invitation to bid/notice to bidders. Important information about the test hole logs and the foundation investigation is contained in the report. The test hole logs are not severable from and cannot be completely and correctly interpreted without reference to the Foundation Geology Report.

TYPICAL PENETROMETER TEST LOG

DATE: Date begun – Date completed
STATION / OFFSET: XX+XX / RT or LT (feet)

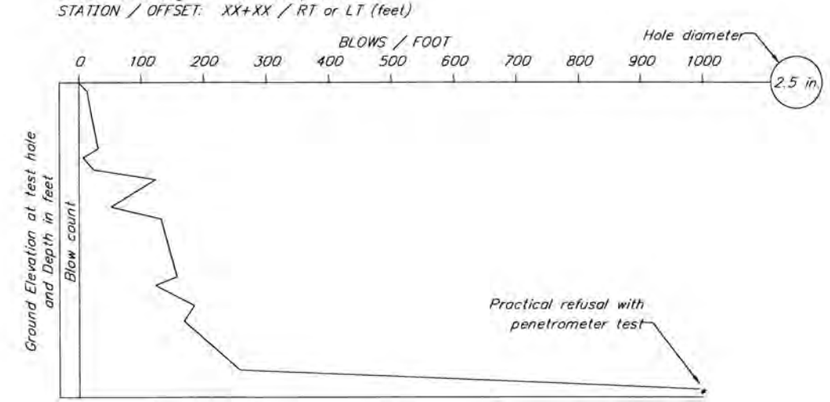

NOTES:
Penetrometer W/2.5" O.D., with a CME AUTOMATIC Hammer using a 340 lb. weight and a 30" freefall

DESIGNED BY: D. Hernstreet	CHECKED: Engineer		
DRAWN BY: R. Angell	CHECKED: J. Nicolazzo		
QUANTITIES BY: Engineer	CHECKED: Engineer		

STATE OF ALASKA
DEPARTMENT OF TRANSPORTATION AND PUBLIC FACILITIES
STATEWIDE MATERIALS

STATE OF ALASKA 49TH David A. Hernstreet No. CE 9800 REGISTERED PROFESSIONAL ENGINEER
8/28/19

KIVALINA CAUSEWAY
SOUTH ACCESS ROUTE
TEST HOLE AND PENETROMETER LEGEND

BRIDGE NO. 2344
DWG. NO. 14

H:\projects\drafting special projects\kivalina\2344_GEO_-15 TYP Jun 26, 2019 – 8:51am

STATE	PROJECT DESIGNATION	YEAR	SHEET NO	TOTAL SHEETS
ALASKA	NFHWY00366	2019	N15	N17

PEN-2

Date: 4/7/18 – 4/7/18
Station: 17+79.11 Offset: 14.99' Rt
Latitude: 67.730609, Longitude: −164.543703

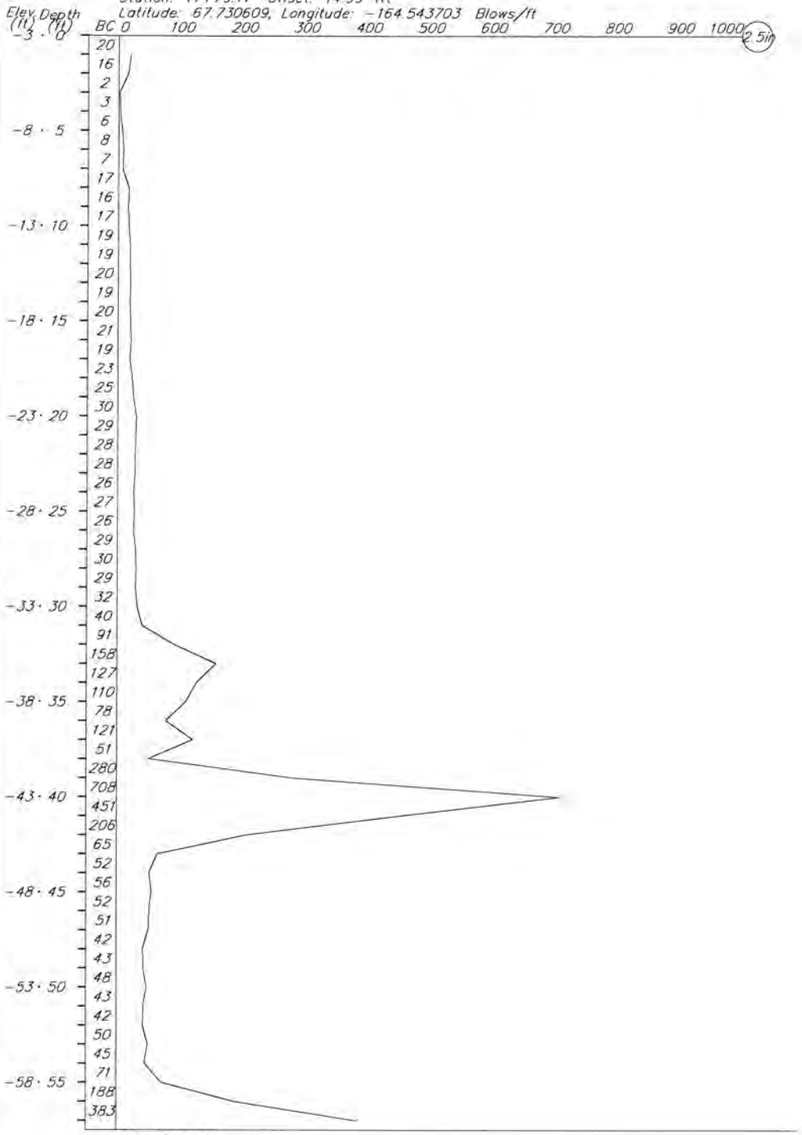

BOH: 57.5 ft

Equipment: Geoprobe 6712 DT Drilling
Method: Penetrometer
Hammer: Automatic Geoprobe 340 lb

TH-1

Date: 4/8/18 – 4/8/18
Station: 17+79.13 Offset: 15.05' Lt
Latitude: 67.730652, Longitude: −164.54389

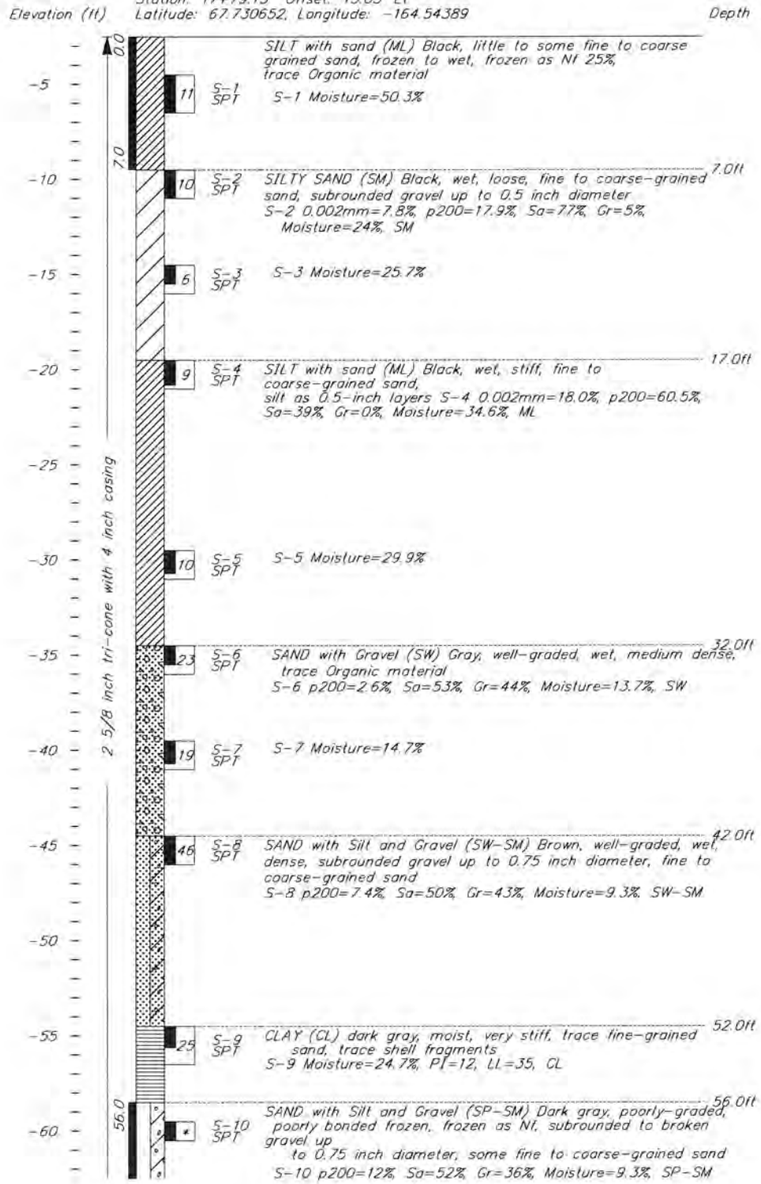

SILT with sand (ML) Black, little to some fine to coarse grained sand, frozen to wet, frozen as Nf 25%, trace Organic material
S-1 Moisture=50.3%

SILTY SAND (SM) Black, wet, loose, fine to coarse-grained sand, subrounded gravel up to 0.5 inch diameter
S-2 0.002mm=7.8%, p200=17.9%, Sa=7.7%, Gr=5%, Moisture=24%, SM

S-3 Moisture=25.7%

SILT with sand (ML) Black, wet, stiff, fine to coarse-grained sand, silt as 0.5-inch layers S-4 0.002mm=18.0%, p200=60.5%, Sa=39%, Gr=0%, Moisture=34.6%, ML

S-5 Moisture=29.9%

SAND with Gravel (SW) Gray, well-graded, wet, medium dense, trace Organic material
S-6 p200=2.6%, Sa=53%, Gr=44%, Moisture=13.7%, SW

S-7 Moisture=14.7%

SAND with Silt and Gravel (SW-SM) Brown, well-graded, wet, dense, subrounded gravel up to 0.75 inch diameter, fine to coarse-grained sand
S-8 p200=7.4%, Sa=50%, Gr=43%, Moisture=9.3%, SW-SM

CLAY (CL) dark gray, moist, very stiff, trace fine-grained sand, trace shell fragments
S-9 Moisture=24.7%, PI=12, LL=35, CL

SAND with Silt and Gravel (SP-SM) Dark gray, poorly-graded, poorly bonded frozen, frozen as Nf, subrounded to broken gravel up to 0.75 inch diameter, some fine to coarse-grained sand
S-10 p200=12%, Sa=52%, Gr=36%, Moisture=9.3%, SP-SM

TH-1 (con't)

Date: 4/8/18 – 4/8/18
Station: 17+79.13 Offset: 15.05' Lt
Latitude: 67.730652, Longitude: −164.54389

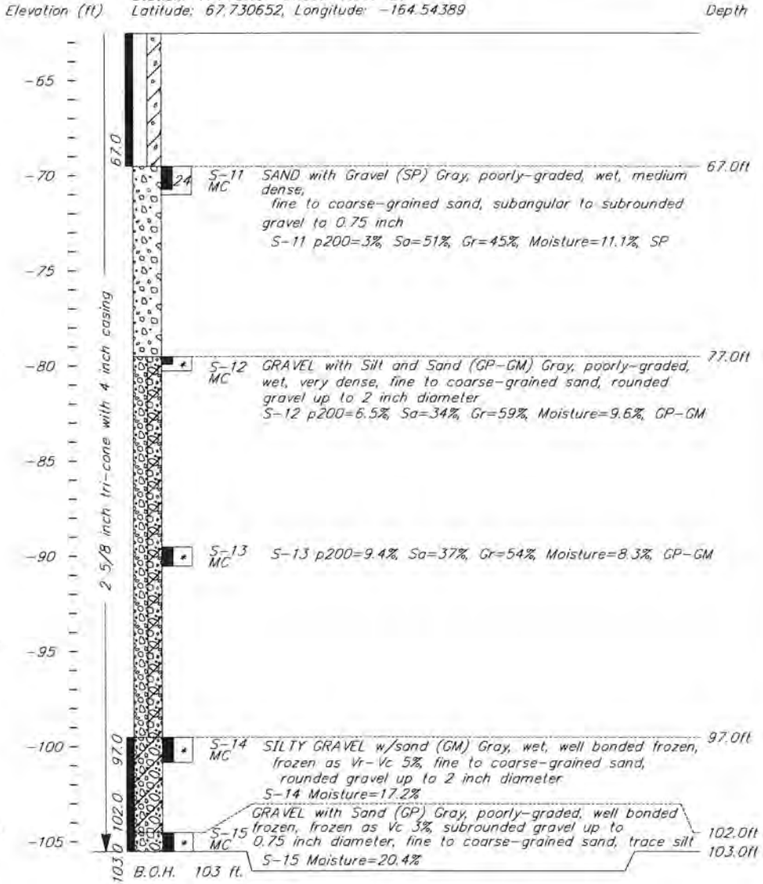

S-11 SAND with Gravel (SP) Gray, poorly-graded, wet, medium dense, fine to coarse-grained sand, subangular to subrounded gravel to 0.75 inch
S-11 p200=3%, Sa=51%, Gr=45%, Moisture=11.1%, SP

S-12 GRAVEL with Silt and Sand (GP-GM) Gray, poorly-graded, wet, very dense, fine to coarse-grained sand, rounded gravel up to 2 inch diameter
S-12 p200=6.5%, Sa=34%, Gr=59%, Moisture=9.6%, GP-GM

S-13 p200=9.4%, Sa=37%, Gr=54%, Moisture=8.3%, GP-GM

S-14 SILTY GRAVEL w/sand (GM) Gray, wet, well bonded frozen, frozen as Vr-Vc 5%, fine to coarse-grained sand, rounded gravel up to 2 inch diameter
S-14 Moisture=17.2%

S-15 GRAVEL with Sand (GP) Gray, poorly-graded, well bonded frozen, frozen as Vc 3%, subrounded gravel up to 0.75 inch diameter, fine to coarse-grained sand, trace silt
S-15 Moisture=20.4%

Notes:
1-inch schedule 80 PVC installed to 103 ft below mudline.
Annulus backfilled with gravel and sand cuttings from surface.
Hammer: Automatic Geoprobe 140 & 340 lb
Equipment: Geoprobe 6712 DT
Drilling Method: Test Hole

DESIGNED BY: D. Hemstreet	CHECKED: Engineer	
DRAWN BY: R. Angell	CHECKED: J. Nicolazzo	
QUANTITIES BY: Engineer	CHECKED: Engineer	

STATE OF ALASKA
DEPARTMENT OF TRANSPORTATION AND PUBLIC FACILITIES
STATEWIDE MATERIALS

STATE OF ALASKA 49TH David A. Hemstreet No. CE 9800 REGISTERED PROFESSIONAL ENGINEER
David A. Hemstreet 8/28/19

KIVALINA CAUSEWAY

SOUTH ACCESS ROUTE

TEST HOLE & PENETROMETER LOGS

BRIDGE NO. 2344
DWG. NO. 15

H:\projects\drafting special projects\kivalina\2344_CEO_-16 PEN-2&TH-1 Jun 25, 2019 – 12:49pm

STATE	PROJECT DESIGNATION	YEAR	SHEET NO.	TOTAL SHEETS
ALASKA	NFHWY00366	2019	N16	N17

TH-3
Date: 4/14/18 – 4/14/18
Station: 19+64.84 Offset: 14.79 Lt
Latitude: 67.731095, Longitude: -164.543238

Elevation (ft) | Depth

0.0 — SILT with sand (ML) Black, poorly bonded frozen, frozen as Vs-15%, fine to coarse-grained sand, trace Organic material

4 — S-1 SPT — S-1 0.002mm=11.0%, p200=72.3%, Sa=28%, Gr=0%, Moisture=92.7%, ML

8.0 — 8.0ft

24 — S-2 SPT — SAND with Silt and Gravel (SP-SM) Dark gray, poorly-graded, wet, medium dense, fine to coarse-grained sand, subangular gravel up to 0.75 inch diameter
S-2 p200=7.2%, Sa=78%, Gr=15%, Moisture=14.1%, SP-SM

21 — S-3 SPT — S-3 Moisture=16.1%

15 — S-4 SPT — 18.0ft — SAND with Silt and Gravel (SW-SM) Dark gray, well-graded, wet, loose to medium dense, fine to coarse-grained sand, subrounded gravel up to 0.5 inch diameter, 0.5-inch layer silt
S-4 0.002mm=2.0%, p200=11.9%, Sa=80%, Gr=8%, Moisture=23.6%, SW-SM

7 — S-5 SPT — S-5 Moisture=27.1%

9 — S-6 SPT — 28.0ft — SILTY SAND (SM) Gray, wet, loose, trace Organic material, fibrous
S-6 p200=41%, Sa=58%, Gr=2%, Moisture=43.1%, SM

8 — S-7 SPT — 33.0ft — SILT with sand (ML) Dark gray, wet, firm, fine-grained sand, trace Organic material
S-7 Moisture=37.7%

23 — S-8 SPT — 37.0ft — GRAVEL with Sand (GW) Gray, well-graded, wet, medium dense, rounded gravel to 1-inch, fine to coarse-grained sand
S-8 p200=4.2%, Sa=47%, Gr=49%, Moisture=9.9%, GW

31 — S-9 SPT — 43.0ft — SILTY GRAVEL with sand (GM) Gray, wet, very dense, fine to coarse-grained sand, some broken to rounded gravel up to 0.75 inch diameter
S-9 Moisture=9.6%

19 — S-10 SPT — 48.0ft — CLAY (CL) Gray, medium plasticity, wet, very stiff, trace fine-grained sand
S-10 Moisture=26.8%, PI=12, LL=34, CL

55.0ft — SAND with Silt and Gravel (SW-SM) Gray, well-graded, wet, very dense, rounded gravel up to 1 inch diameter, some fine to coarse-grained sand, few silt

56 — S-11 SPT — S-11 p200=8.5%, Sa=53%, Gr=38%, Moisture=8.8%, SW-SM

2 5/8 inch tri-cone with 4 inch casing

TH-3 (con't)
Date: 4/14/18 – 4/14/18
Station: 19+64.84 Offset: 14.79' Lt
Latitude: 67.731095, Longitude: -164.543238

Elevation (ft) | Depth

68.0ft

21 — S-12 MC — SAND with Gravel (SP) Gray, poorly-graded, wet, medium dense, broken to rounded gravel up to 1 inch dia, fine to coarse-grained sand
S-12 p200=5%, Sa=50%, Gr=45%, Moisture=9.7%, SP

21 — S-13 MC — S-13 Moisture=13.1%

88.0ft

23 — S-14 MC — GRAVEL with Sand (GP) Gray, poorly-graded, wet, medium dense, subrounded gravel up to 1.5 inch dia, fine to coarse-grained sand, trace silt
S-14 Moisture=9.7%

98.0

S-15 MC — frozen as Vc-5%, well bonded frozen S-15 Moisture=11.8%

103.7

S-16 MC — S-16 p200=4.6%, Sa=45%, Gr=51%, Moisture=11.2%, GP — 103.7ft

B.O.H. 103.7 ft.

2 5/8 inch tri-cone with 4 inch casing

Notes:
1-inch schedule 80 PVC installed to 104 ft below mudline.
Annulus backfilled with gravel and sand cuttings from surface.
Hammer: Automatic Geoprobe 140 & 340 lb
Equipment: Geoprobe 6712 DT

DESIGNED BY: D. Hemstreet	CHECKED: Engineer		
DRAWN BY: R. Angell	CHECKED: J. Nicolazzo		
QUANTITIES BY: Engineer	CHECKED: Engineer		

STATE OF ALASKA
DEPARTMENT OF TRANSPORTATION AND PUBLIC FACILITIES
STATEWIDE MATERIALS

STATE OF ALASKA 49TH — David A. Hemstreet No. CE 9802 — REGISTERED PROFESSIONAL ENGINEER — 8/28/19

KIVALINA CAUSEWAY
SOUTH ACCESS ROUTE
TEST HOLE & PENETROMETER LOGS

BRIDGE NO. 2344
DWG. NO. 16

H:\projects\drafting special projects\kivalina\2344_GEO_-17 TH-3 Jun 25, 2019 - 12:49pm

STATE	PROJECT DESIGNATION	YEAR	SHEET NO.	TOTAL SHEETS
ALASKA	NFHWY00366	2019	N17	N17

PEN-4
Date: 4/6/18 – 4/6/18
Station: 19+65.07 Offset: 14.95' Rt
Latitude: 67.731053, Longitude: −164.543028

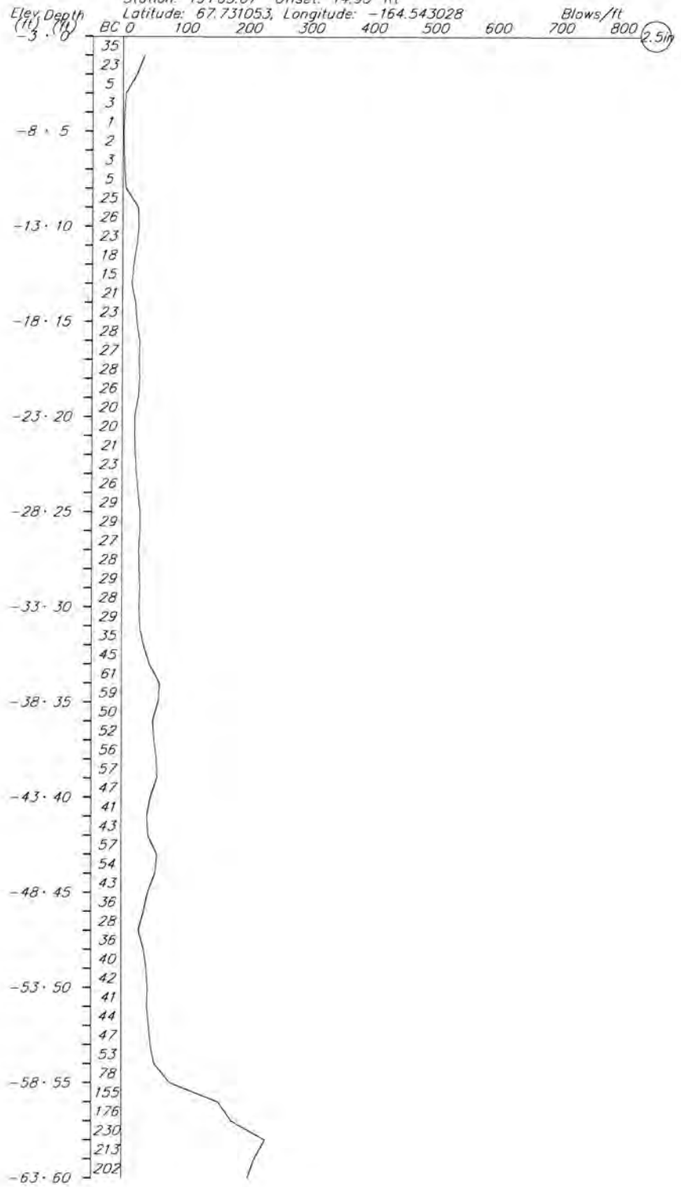

PEN-4 (con't)
Date: 4/6/18 – 4/6/18
Station: 19+65.07 Offset: 14.95' Rt
Latitude: 67.731053, Longitude: −164.543028

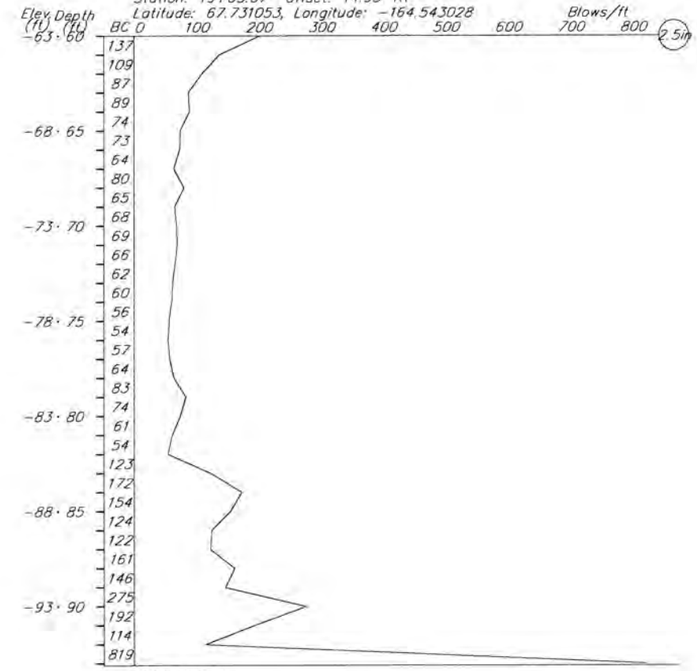

BOH: 93.1 ft

Hammer: Automatic Geoprobe 340 lb
Equipment: Geoprobe 6712 DT Drilling
Method: Penetrometer

DESIGNED BY: D. Hemstreet	CHECKED: Engineer		
DRAWN BY: R. Angell	CHECKED: J. Nicolazzo		
QUANTITIES BY: Engineer	CHECKED: Engineer		

STATE OF ALASKA
DEPARTMENT OF TRANSPORTATION AND PUBLIC FACILITIES
STATEWIDE MATERIALS

STATE OF ALASKA 49TH David A. Hemstreet No. CE 9800 REGISTERED PROFESSIONAL ENGINEER
David A. Hemstreet 8/28/19

KIVALINA CAUSEWAY
SOUTH ACCESS ROUTE
TEST HOLE & PENETROMETER LOGS

BRIDGE NO. 2344
DWG. NO. 17

H:\projects\drafting special projects\kivalina\2344_GEO,-18 PEN-4 Jun 25, 2019 – 12:49pm